FHWA REGION	STATE	PROJECT	
5	OHIO	M-ID 99 (9)	

58
170

CUYAHOGA COUNTY
HURON/ PROSPECT BRIDGE

LEGEND

- L.P. — Light Post Drain
- T.P. — Trolley Pole Drain
- E.J. — Expansion Joint Drain
- C.D. — Curb Drain
- T.T. — Trolley Trough Drain
- L.S.C. — Light Splice Chamber
- F.H. — Fire Hydrant Vault Drain
- Pipes to be Removed and Replaced
- Pipes to be Removed
- Pipes Missing to be Replaced
- Structural Steel to be Repaired
- Structural Steel to be Removed
- Structural Steel to be Replaced
- Drainage Repairs
- Structural Steel Repairs
- U00 drop — Vertical Pipe Drop at Column Number

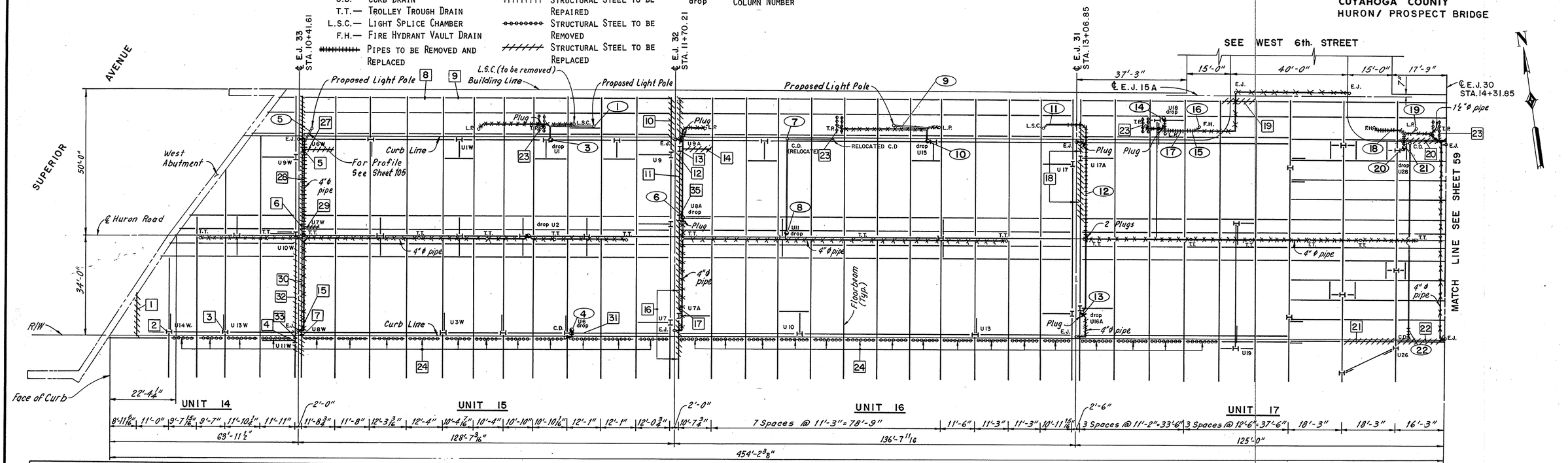

PLAN

ESTIMATED DRAINAGE QUANTITIES

REF. NO.	DESCRIPTION	ITEM SPECIAL CLEAN & PAINT EXIST. PIPE (LIN. FT.) PIPE SIZE (IN.) 3	4	8		ITEM 518 PIPE REPLACEMENT (LIN. FT.) PIPE SIZE (IN.) 3	4	8		FOR DETAILS SEE SHEET	DROP LOCATION
1	L.P. drain						21			–	U1
3	U1 drop		15								
4	Curb drain/drop U6							18		94	U6
5	L.P. drain						30			95	U6W
6	L.P. drain/drop U8A		44							94	U8W
7	Curb drain			30				20		94	U11
8	U11 drop			15							
9	L.P. drain						17			94	U15
10	U15 drop		18								
11	L.S.C. drain	10				14				94	U16A
12	L.S.C. drain		30				32				
13	U16A drop		15								
14	U18 drop		20							94	U18
15	F.H. vault drain						14				
16	F.H. vault drain						4				
17	L.P. drain						8				
18	F.H. vault drain						20			94	U28
19	L.P. drain						8				
20	U28 drop			18							
21	Curb drain			5							
22	Curb drain			65				5			
23	Curb drain @ E.J. 26	(See Plan Sheet No. 59)						3		95	U85
24	U89 drop	(See Plan Sheet No. 59)					1			95	
Totals			10	142	133		14	155	46		

NOTES: 1. Lump Sum Bid Item No. 202., Pipe Removed and Disposed of, includes approximately 731 Lin. Ft. within Units 14 to 17.

2. The lengths of pipe shown in the Estimated Drainage Quantities Table for Bid Item Special Clean and Paint Existing Pipe are the approximate lengths of pipe to be cleaned and painted in Units 14 to 17. The lengths are approximate only and are given to assist the Contractor in preparing his bid for this lump sum item.

ESTIMATED STEEL QUANTITIES

REF. NO.	LOCATION (UNIT NO.)	ITEM 202 PORTIONS OF STRUCTURE REMOVED (LBS.)	ITEM 513 STRUCTURAL STEEL (LBS.)	ITEM 513 CURB PLATES (LBS.)	ITEM 513 EXP. JT. STEEL (LBS.)	ITEM 514 CLEAN & PAINT EXISTING STRUCTURAL STEEL (SQ. FT.)	FOR DETAILS SEE SHEET
	14			975	2846	5,600	
1	14	1,187	1,137				72
2	14	0	74				72
3	14	0	74				72
4	14	2,642	2,246				72
24	14	1,290	0				–
32	14	12,726	8,717				72
33	14	317	358				72
Sub Totals		18,162	12,606	975	2846	5,600	
	15			2,878	5691	21,145	
5	15	0	256				73
6	15	0	74				72
7	15	4,554	3,376				73
8	15	Heat Straighten					73
9	15	Heat Straighten					73
10	15	0	417				73
15	15	227	262				74
23	15	372	0				–
24	15	4,231	0				–
27	15	441	441				73
28	15	15,952	10,547				74
29	15	520	520				73
30	15	11,074	8,688				73
31	15	705	705				74
Sub Totals		38,076	25,226	2,878	5691	21,145	

ESTIMATED STEEL QUANTITIES

REF. NO.	LOCATION (UNIT NO.)	ITEM 202 PORTIONS OF STRUCTURE REMOVED (LBS.)	ITEM 513 STRUCTURAL STEEL (LBS.)	ITEM 513 CURB PLATES (LBS.)	ITEM 513 EXP. JT. STEEL (LBS.)	ITEM 514 CLEAN & PAINT EXISTING STRUCTURAL STEEL (SQ. FT.)	FOR DETAILS SEE SHEET
	16			3,054	5691	27,520	
11	16	14,664	10,478				76
12	16	405	357				76
13	16	0	94				76
14	16	1,453	1,453				76
16	16	24,713	14,327				75
17	16	280	212				75
23	16	340	0				–
24	16	4,482	0				–
35	16	Heat Straighten & Weld					75
Sub Totals		46,337	26,921	3,054	5691	27,520	
	17			2,702	5691	34,065	
18	17	1,027	1,818				77
19	17	812	818				77
20	17	1,227	1,192				77
21	17	1,378	1,339				77
22	17	1,207	1,173				77
23	17	680	0				–
24	17	1,827	0				–
E.J. 15					5547		
Sub Totals		8,158	6,340	2,702	11,238	34,065	
Totals		110,733	71,093	9,609	25,466	88,330	

NOTES:
1. Pipe drop at Column U2 is to be removed, all other drops are to be left in service.
2. For Miscellaneous Drainage Details see Sheet 98.

Note: The Areas Shown in Item 514 are Approximate Only and are Given to Assist the Contractor in Preparing his Bid For This Lump Sum Item.

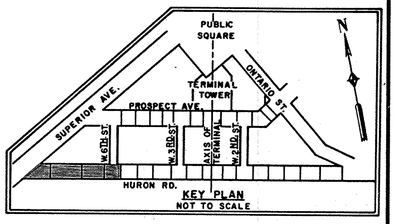

EUTHENICS INC.
CONSULTING ENGINEERS
CLEVELAND OHIO

REHABILITATION OF TOWER CITY BRIDGES
PROSPECT AVE., HURON ROAD,
WEST 2ND., 3RD. & 6TH. ST. VIADUCTS
STREET LEVEL FRAMING AND DRAINAGE
UNIT 14 TO UNIT 17
HURON ROAD

CLEVELAND CUYAHOGA COUNTY OHIO

Made REM	Trcd. REM	Ckd. LJD	Rev. RAB	Scale: 1/16" = 1'-0"
Date 4-20-78	Date 4-21-78	Date 3-9-81	Date 9-4-82	Sheet 58 / 170

FHWA REGION	STATE	PROJECT	
5	OHIO	IX-ID99(9)	

58A

CUYAHOGA COUNTY
HURON/PROSPECT BRIDGE

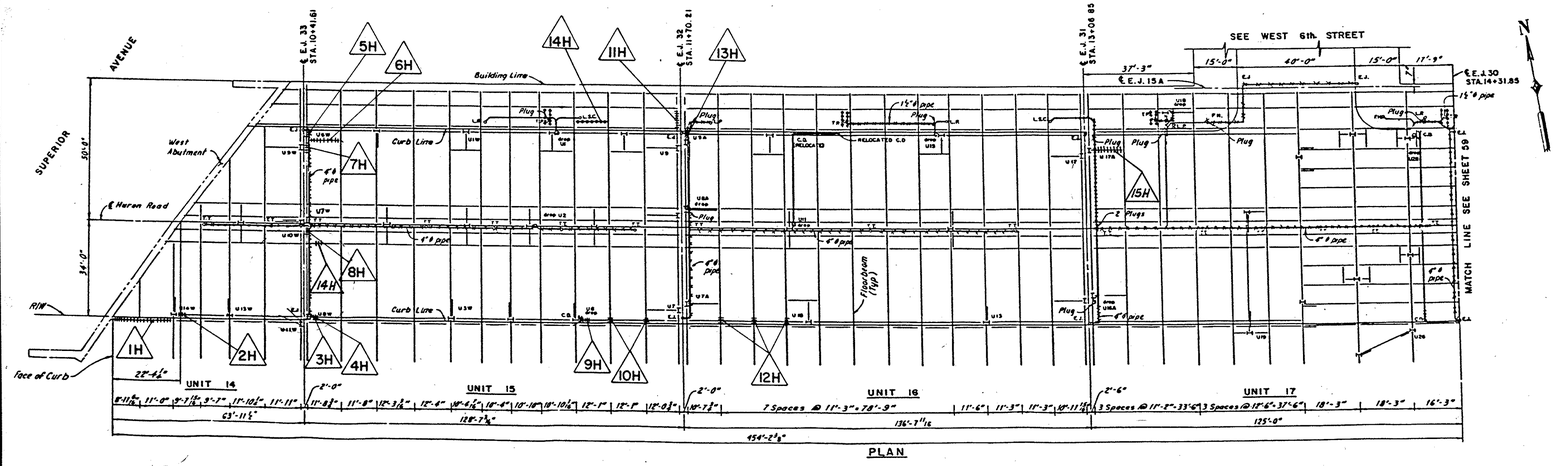

ESTIMATED STEEL QUANTITIES

REF. NO.	LOCATION (UNIT NO.)	ITEM 202 PORTIONS OF STRUCTURE REMOVED (LBS.)	ITEM 513 STRUCTURAL STEEL (LBS.)	ITEM 513 CURB PLATES (LBS.)	ITEM 513 EXP. JT. STEEL (LBS.)	ITEM SPECIAL CLEAN & PAINT EXISTING STRUCTURAL STEEL (SQ.FT.)	FOR DETAILS SEE SHEET
1H	14	2,782	2,732				
2H	14	127	150				
3H	15	—	161				
4H	15	461	470				
5H	15	2,329	2,198				
6H	15	528	477				
7H	15	179	304				
8H	15	226	330				
9H	15	—	189				
10H	15	523	529				
11H	15	622.	625				
14H	15	250					
12H	16	977	1,037				
13H	16	256	437				
14H	15		28				
15H	17	284	284				
TOTAL		9,260	9,639				
		9,544	9,951				

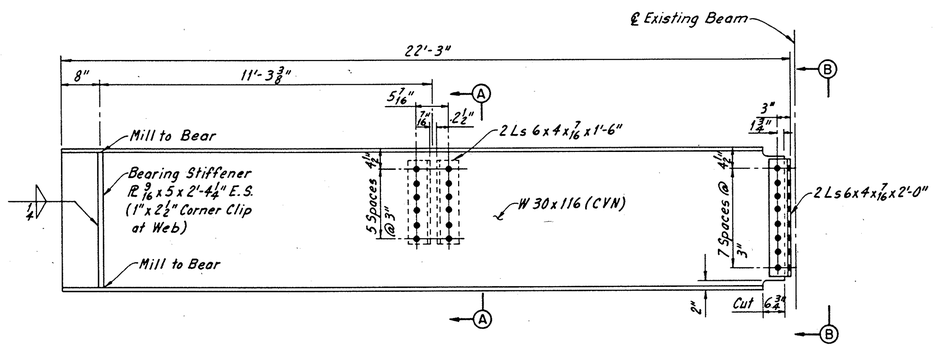

REF. NO. 1H
Unit 14
(Looking North)

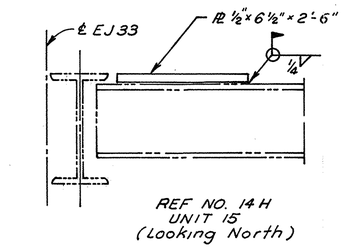

REF. NO. 14H
UNIT 15
(Looking North)

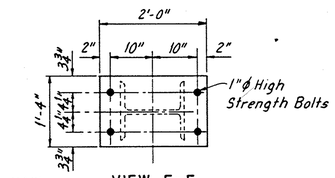

VIEW E-E

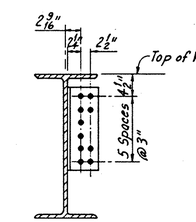

SECTION A-A

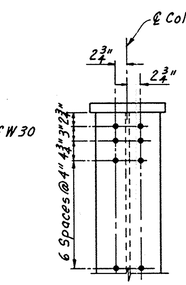

VIEW F-F
(Looking North)

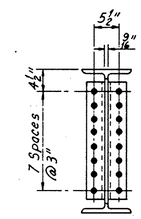

VIEW B-B

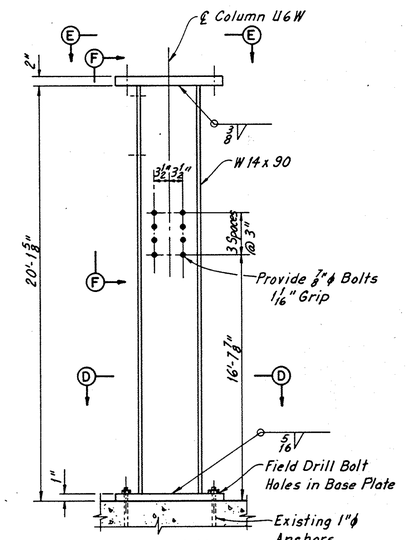

ELEVATION
(Looking West)

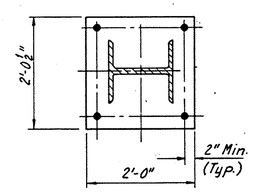

SECTION D-D

REF. NO. 5H
Unit 15

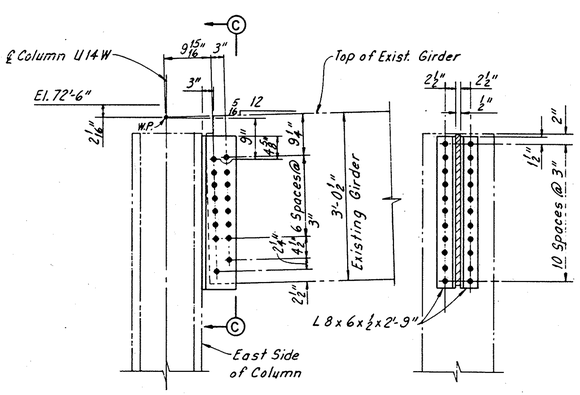

REF. NO. 2H
Unit 14

SECTION C-C

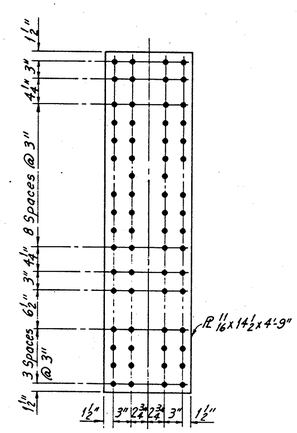

REF. NO. 3H
Unit 15
(Fill PL @ Column U8W)

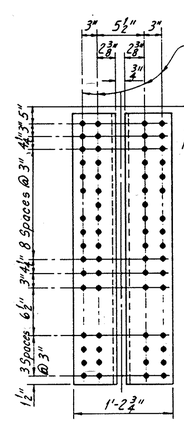

END VIEW

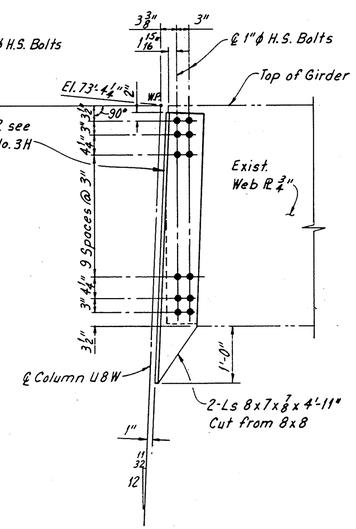

REF. NO. 4H
Unit 15

NOTE: For Notes see Sheet 57A.

Rev. 4-10-84
Added 3-13-84

EUTHENICS INC.
CONSULTING ENGINEERS
CLEVELAND OHIO

REHABILITATION OF TOWER CITY BRIDGES
PROSPECT AVE., HURON ROAD,
WEST 2ND., 3RD. & 6TH. ST. VIADUCTS
HURON ROAD
STEEL REPAIR DETAILS
PHASE I-A

CLEVELAND CUYAHOGA COUNTY OHIO

Mode JSC	Trcd. JSC	Ckd. LJD	Rev. RAB	Scale:
Date 2-27-84	Date 2-28-84	Date 2-29-84	Date 3-2-84	Sheet 58A

ODOT D-12 TES

FHWA REGION	STATE	PROJECT	
5	OHIO	IX-ID99(9)	

58B

CUYAHOGA COUNTY
HURON/PROSPECT BRIDGE

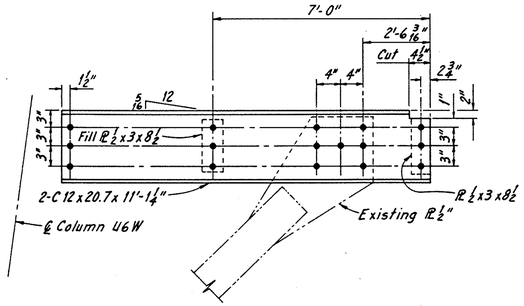

REF. NO. 6H
Unit 15
(Looking North)

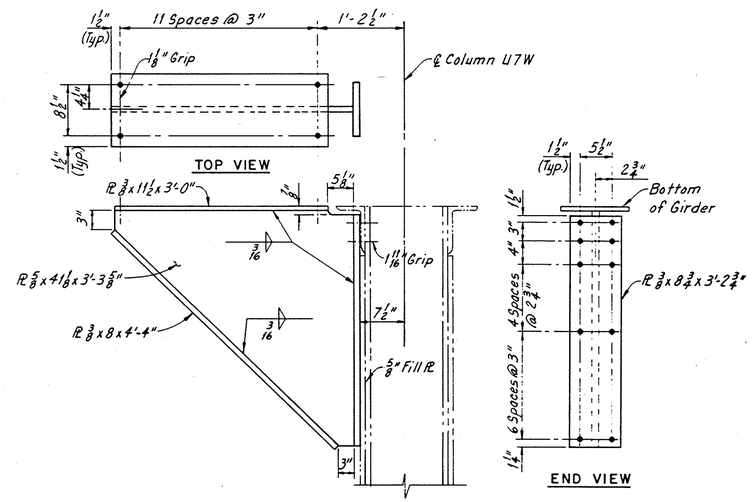

REF. NO. 8H
Unit 15
(Looking West)

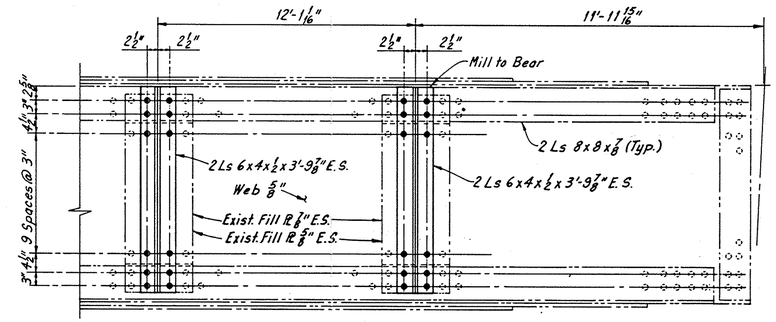

REF. NO. 10H
Unit 15
(Looking North)

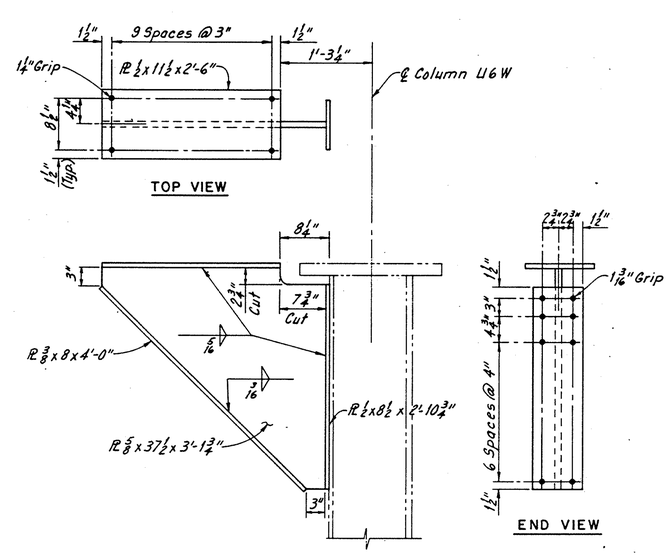

REF. NO. 7H
Unit 15
(Looking West)

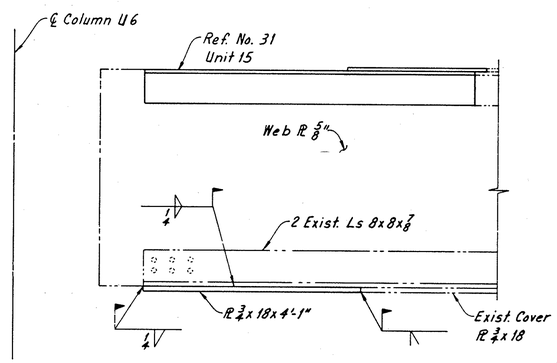

REF. NO. 9H
Unit 15
(Looking North)

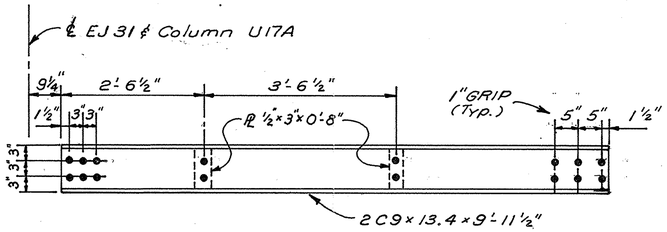

REF. NO. 15H
UNIT 17
(Looking North)

NOTES: For Detail Locations see Framing Plan on Sheet 58A.
For Additional Notes see Sheet 57A.

Rev. 4-10-84
Added 3-13-84

EUTHENICS INC.
CONSULTING ENGINEERS
CLEVELAND OHIO

REHABILITATION OF TOWER CITY BRIDGES
PROSPECT AVE., HURON ROAD,
WEST 2ND., 3RD. & 6TH. ST. VIADUCTS
HURON ROAD
STEEL REPAIR DETAILS
PHASE I-A

CLEVELAND CUYAHOGA COUNTY OHIO

Made JSC	Trcd. JSC	Ckd. LJD	Rev. RAB	Scale:
Date 2-28-84	Date 2-28-84	Date 3-1-84	Date 3-2-84	Sheet 58B

ODOT D-12 TES

FHWA REGION	STATE	PROJECT	
5	OHIO	IX-ID99(9)	

58C

CUYAHOGA COUNTY
HURON/PROSPECT BRIDGE

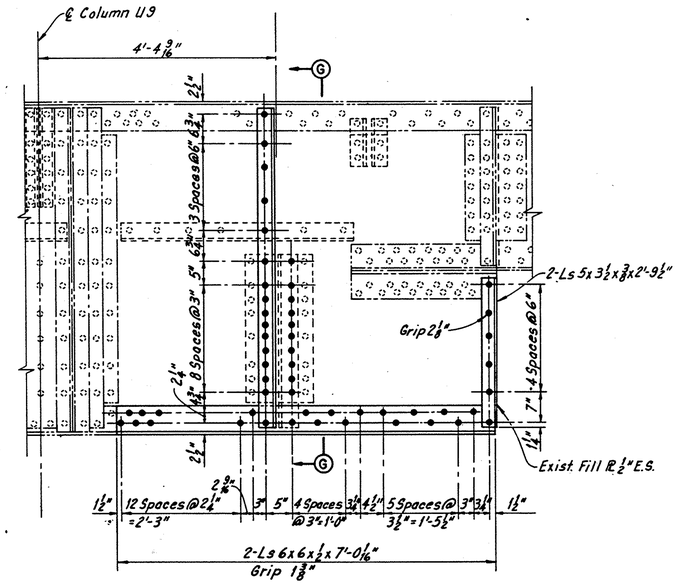

REF. NO. 11H
Unit 15
(Looking West)

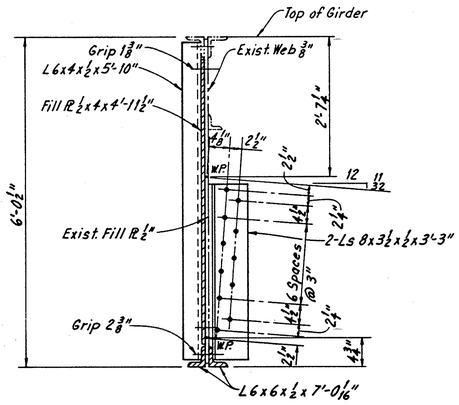

SECTION G-G

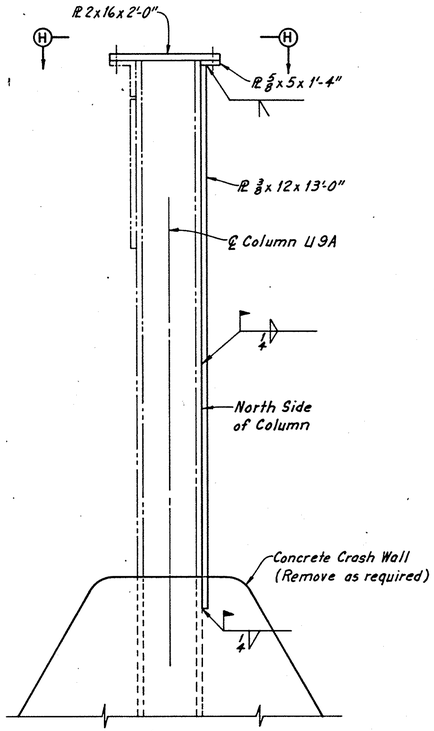

ELEVATION

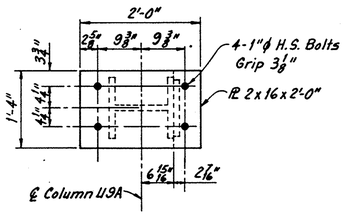

VIEW H-H

REF. NO. 13H
Unit 16
(Looking West)

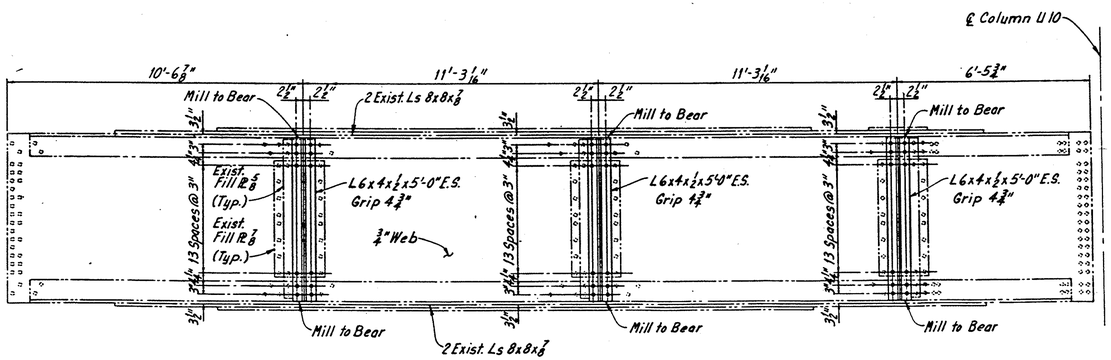

REF. NO. 12H
Unit 16
(Looking North)

NOTES: FOR ADDITIONAL NOTES SEE SHEET 57A.
FOR DETAIL LOCATIONS SEE FRAMING PLAN ON SHEET 58A.

Added 3-13-84

EUTHENICS INC.
CONSULTING ENGINEERS
CLEVELAND OHIO

REHABILITATION OF TOWER CITY BRIDGES
PROSPECT AVE., HURON ROAD,
WEST 2ND., 3RD. & 6TH. ST. VIADUCTS
HURON ROAD
STEEL REPAIR DETAILS
PHASE I-A

CLEVELAND CUYAHOGA COUNTY OHIO

Made JSC	Trcd. JSC	Ckd. LJD	Rev. RAB	Scale:
Date 2-29-84	Date 2-29-84	Date 3-1-84	Date 3-2-84	Sheet 58C

ODOT D-12 TES

FHWA REGION	STATE	PROJECT	
5	OHIO	M-1D99(9)	

CUYAHOGA COUNTY
HURON / PROSPECT BRIDGE

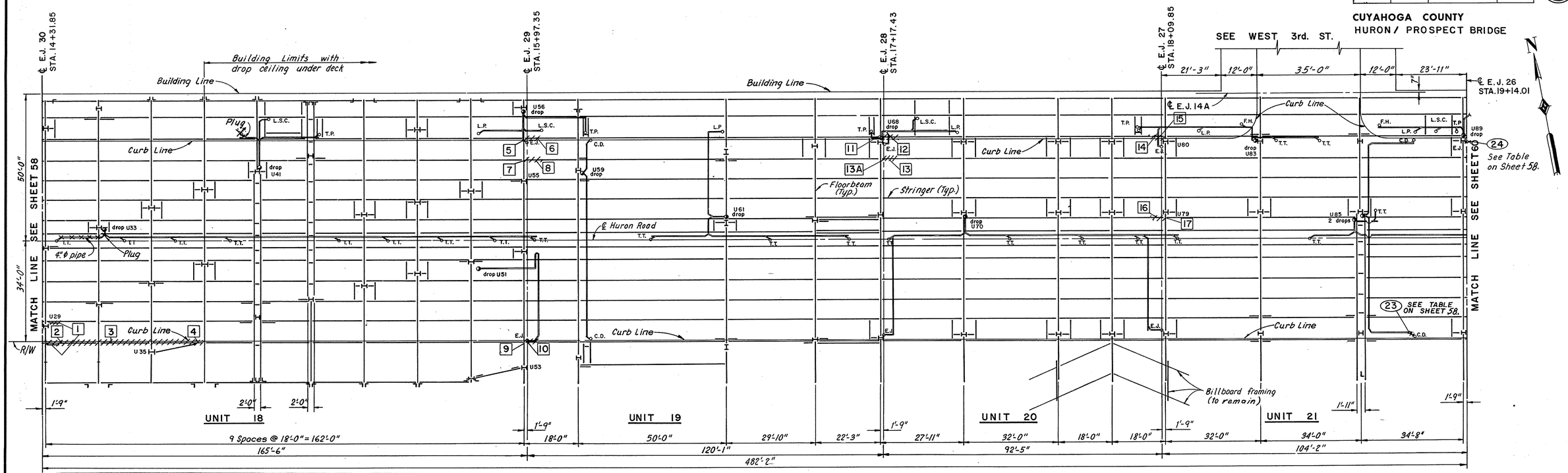

PLAN

0 ESTIMATED STEEL QUANTITIES

REF. NO.	LOCATION (UNIT NO.)	ITEM 202 PORTIONS OF STRUCTURE REMOVED (LBS.)	ITEM 513 STRUCTURAL STEEL (LBS.)	ITEM 513 CURB PLATES (LBS.)	ITEM 513 EXP. JT. STEEL (LBS.)	ITEM 514 CLEAN & PAINT EXISTING STRUCTURAL STEEL (SQ. FT.)	FOR DETAILS SEE SHEET
	18			3,681	5691	24,700	
1	18	369	323				77
2	18	1,221	1,185				77
3	18	1,233	1,197				77
4	18	1,241	1,206				77
Sub Totals		4,064	3,911	3,681	5691	24,700	
	19			2,680	5691	3,200	
5	19	88	88				78
6	19	231	435				78
7	19	88	93				78
8	19	12	37				78
9	19	88	93				78
10	19	12	13				78
Sub Totals		519	759	2,680	5691	3,200	
	20			2,075	5691	3,700	
11	20	111	90				78
12	20	13	45				78
13	20	13	45				78
13A	20	111	90				78
14	20	132	126				78
15	20	205	413				78
16	20	240	457				78
17	20	97	110				78
Sub Totals		922	1,376	2,075	5691	3,700	
E.J. 14					3280		
	21			2,229	5691	3,500	
Sub Totals				2,229	8971	3,500	
Totals		5,505	6,046	10,665	26,044	35,100	

Note:
The Areas Shown in Item 514 are Approximate Only and are Given to Assist the Contractor in Preparing his Bid for This Lump Sum Item.

NOTES:
1. LUMP SUM BID ITEM NO. 202, PIPE REMOVED AND DISPOSED OF INCLUDES APPROXIMATELY 20 LIN. FT. LOCATED IN UNIT 18.
2. FOR ELEVATION OF DROPS AT COLUMNS U85 AND U89 SEE SHEET 95.
3. ALL PIPE DROPS ARE TO BE LEFT IN SERVICE.
4. FOR MISCELLANEOUS DRAINAGE DETAILS SEE SHEET 98.

LEGEND

- L.P.— LIGHT POST DRAIN
- T.P.— TROLLEY POLE DRAIN
- E.J.— EXPANSION JOINT DRAIN
- C.D.— CURB DRAIN
- T.T.— TROLLEY TROUGH DRAIN
- L.S.C.— LIGHT SPLICE CHAMBER
- F.H.— FIRE HYDRANT VAULT DRAIN
- PIPES TO BE REMOVED AND REPLACED
- PIPES TO BE REMOVED
- PIPES MISSING TO BE REPLACED
- STRUCTURAL STEEL TO BE REPAIRED
- STRUCTURAL STEEL TO BE REMOVED
- STRUCTURAL STEEL TO BE REPLACED
- DRAINAGE REPAIRS
- STRUCTURAL STEEL REPAIRS
- U00 drop — VERTICAL PIPE DROP AT COLUMN NUMBER

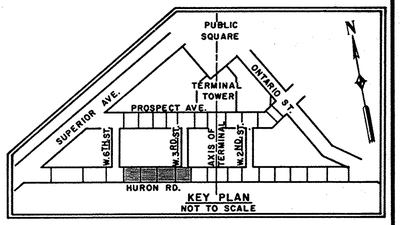

EUTHENICS INC.
CONSULTING ENGINEERS
CLEVELAND OHIO

REHABILITATION OF TOWER CITY BRIDGES
PROSPECT AVE., HURON ROAD,
WEST 2ND., 3RD. & 6TH. ST. VIADUCTS
STREET LEVEL FRAMING AND DRAINAGE
UNIT 18 TO UNIT 21
HURON ROAD

CLEVELAND CUYAHOGA COUNTY OHIO

Mode REM	Trcd. REM	Ckd. LJD	Rev. RAB	Scale: 1/8" = 1'-0"
Date 4-18-78	Date 4-19-78	Date 3-9-81	Date 9-4-82	Sheet 59/170

FHWA REGION	STATE	PROJECT	
5	OHIO	M-ID 99 (9)	

60/170

CUYAHOGA COUNTY
HURON / PROSPECT BRIDGE

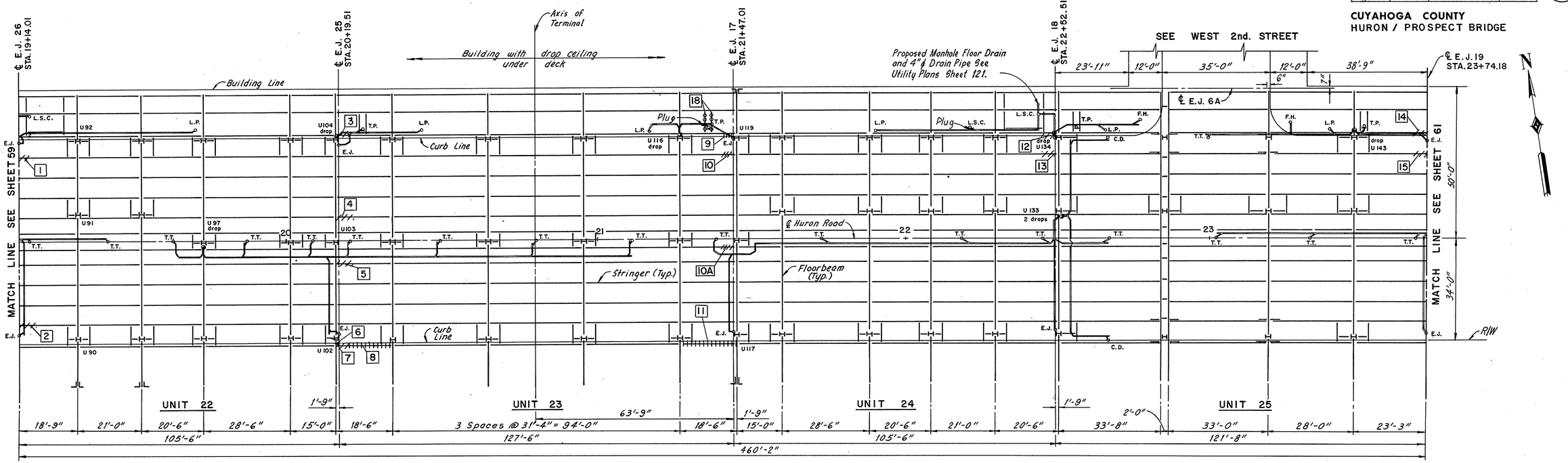

REF. NO.	LOCATION (UNIT NO.)	ITEM 202 PORTIONS OF STRUCTURE REMOVED (LBS.)	ITEM 513 STRUCTURAL STEEL (LBS.)	ITEM 513 CURB PLATES (LBS.)	ITEM 513 EXP. JT. STEEL (LBS.)	ITEM 514 CLEAN & PAINT EXISTING STRUCTURAL STEEL (SQ. FT.)	FOR DETAILS SEE SHEET
	22			2,361	5691	4,200	
1	22	9	9				79
2	22	14	14				79
Sub Totals		23	23	2,361	5691	4,200	
	23			2,845	5691	5,050	
3	23	8	8				79
4	23	8	8				79
5	23	15	15				79
6	23	92	92				79
7	23	106	106				79
8	23	1,458	1,243				79
9	23	0	57				79
10	23	11	11				79
10A	23	11	11				79
11	23	1,482	1,241				79
18	23	379	0				–
Sub Totals		3,570	2,792	2,845	5,691	5,050	

REF. NO.	LOCATION (UNIT NO.)	ITEM 202 PORTIONS OF STRUCTURE REMOVED (LBS.)	ITEM 513 STRUCTURAL STEEL (LBS.)	ITEM 513 CURB PLATES (LBS.)	ITEM 513 EXP. JT. STEEL (LBS.)	ITEM 514 CLEAN & PAINT EXISTING STRUCTURAL STEEL (SQ. FT.)	FOR DETAILS SEE SHEET
	24			2,421	5691	1,987	
12	24	12	12				79
13	24	15	15				79
Sub Totals		27	27	2,421	5691	1,987	
	25			2,660	5691	2,218	
14	25	12	12				79
15	25	12	12				79
EJ6A					5050		
Sub Totals		24	24	2,660	10,741	2,218	
Totals		3,644	2,866	10,287	27,814	13,455	

Note:
The Areas Shown in Item 514 are Approximate Only and are Given to Assist the Contractor in Preparing his Bid for This Lump Sum Item.

NOTES:
1. ALL DROPS ARE TO BE LEFT IN SERVICE.
2. FOR MISCELLANEOUS DRAINAGE DETAILS SEE SHEET 98.

LEGEND

- L.P.— LIGHT POST DRAIN
- T.P.— TROLLEY POLE DRAIN
- E.J.— EXPANSION JOINT DRAIN
- C.D.— CURB DRAIN
- T.T.— TROLLEY TROUGH DRAIN
- L.S.C.— LIGHT SPLICE CHAMBER
- F.H.— FIRE HYDRANT VAULT DRAIN
- PIPES TO BE REMOVED AND REPLACED
- PIPES TO BE REMOVED
- PIPES MISSING TO BE REPLACED
- STRUCTURAL STEEL TO BE REPAIRED
- STRUCTURAL STEEL TO BE REMOVED
- STRUCTURAL STEEL TO BE REPLACED
- DRAINAGE REPAIRS
- STRUCTURAL STEEL REPAIRS
- U00 drop — VERTICAL PIPE DROP AT COLUMN NUMBER

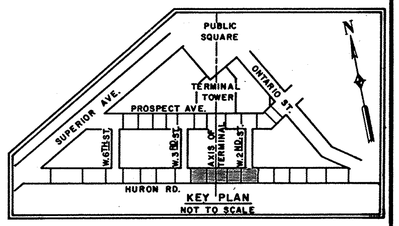

EUTHENICS INC.
CONSULTING ENGINEERS
CLEVELAND OHIO

REHABILITATION OF TOWER CITY BRIDGES
PROSPECT AVE., HURON ROAD,
WEST 2ND., 3RD. & 6TH. ST. VIADUCTS
STREET LEVEL FRAMING AND DRAINAGE
UNIT 22 TO UNIT 25
HURON ROAD

CLEVELAND CUYAHOGA COUNTY OHIO

Made REM	Trcd. REM	Ckd. LJD	Rev. RAB	Scale: 1/16" = 1'-0"
Date 4-14-78	Date 4-15-78	Date 3-11-81	Date 9-4-82	Sheet 60 / 170

FHWA REGION	STATE	PROJECT	
5	OHIO	IX-ID99(9)	

60A

CUYAHOGA COUNTY
HURON/PROSPECT BRIDGE

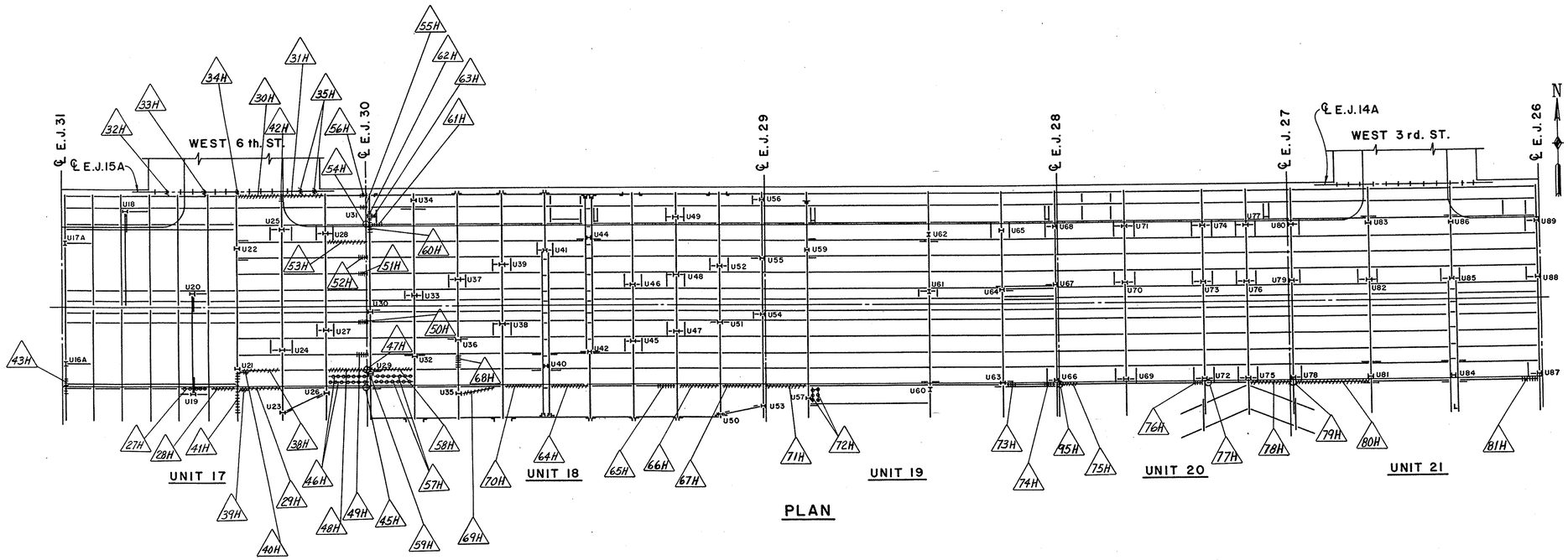

PLAN

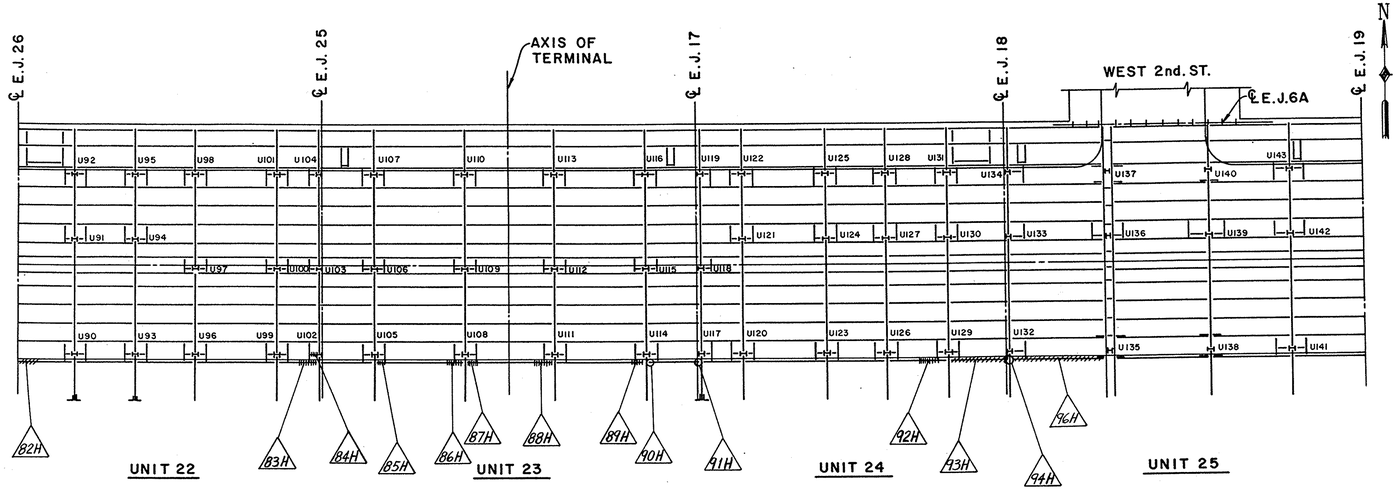

PLAN

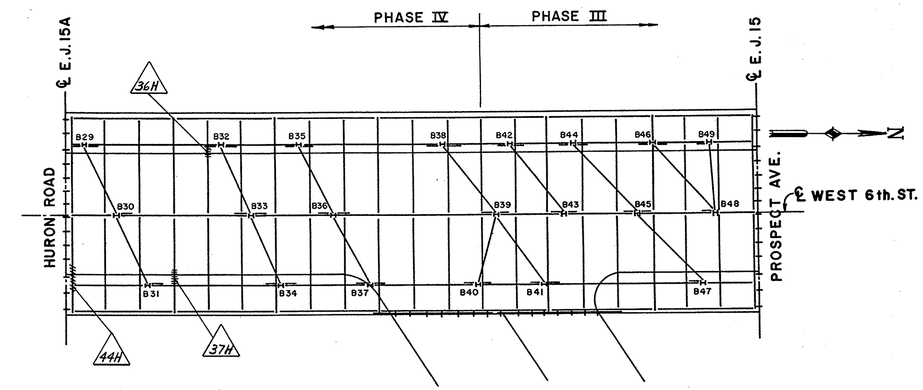

PLAN

LEGEND

- INDICATES STRUCTURAL STEEL TO BE REPAIRED
- INDICATES STRUCTURAL STEEL TO BE REPLACED
- INDICATES STRUCTURAL STEEL TO BE REMOVED AND NOT REPLACED
- U00 or B00 — INDICATES COLUMN NUMBERS

NOTE:

THE FOLLOWING ABBREVIATIONS ARE USED:

(T & B)	= TOP & BOTTOM	(TYP.)	= TYPICAL
N.S.	= NEAR SIDE	F.S.	= FAR SIDE
W.P.	= WORKING POINT	E.S.	= EACH SIDE
		H.S. BOLTS	= HIGH STRENGTH BOLTS

Sheet added 5-17-85

EUTHENICS INC.
CONSULTING ENGINEERS
CLEVELAND OHIO

REHABILITATION OF TOWER CITY BRIDGES
PROSPECT AVE., HURON ROAD,
WEST 2ND., 3RD. & 6TH. ST. VIADUCTS

STREET LEVEL FRAMING PLAN

UNITS 17 THRU 25 & WEST 6th. ST.

HURON RD. PHASE IV

CLEVELAND CUYAHOGA COUNTY OHIO

Mode JSC	Trcd. JSC	Ckd. LJD	Rev. RAB	Scale:
Date 5-8-85	Date 5-8-85	Date 5-8-85	Date 5-8-85	Sheet 60A

ODOT 5-10-85 TES

FHWA REGION	STATE	PROJECT	
5	OHIO	IX-ID99(9)	

60B

CUYAHOGA COUNTY
HURON/PROSPECT BRIDGE

ESTIMATED STEEL QUANTITIES

REF. NO.	LOCATION (UNIT NO.)	ITEM 202 PORTIONS OF STRUCTURE REMOVED (LBS.)	ITEM 513 STRUCTURAL STEEL (LBS.)	ITEM 513 CURB PLATES (LBS.)	ITEM 513 EXP.JT. STEEL (LBS.)	ITEM SPECIAL CLEAN & PAINT EXISTING STRUCTURAL STEEL (SQ.FT.)	FOR DETAILS SEE SHEET
27H	17	887	—				
28H	17	981	903				60D
29H	17	1,787	1,720				60D
30H	17	1,669	1,705				60D
31H	17	1,824	1,999				60D
32H	17	131	130				60D
33H	17	126	127				60D
34H	17	131	92				60D
35H	17	258	202				60D
36H	17	—	155				60D
37H	17	—	136				60D
38H	17	1,638	1,749				60D
39H	17	372	402				60E
40H	17	372	402				60E
41H	17	1,234	2,703				60E
42H	17	231	237				60E
43H	17	—	69				60E
44H	17	247	611				60E
45H	17	149	118				60E
46H	17	728	—				
47H	17	140	120				60E
48H	17	1,289	1,257				60F
49H	17	—	29				60F
50H	17	—	20				60F
51H	17	—	31				60F
52H	17	316	564				60F
53H	17	1,262	1,194				60F
54H	17	148	127				60F
55H	17	—	29				60F
56H	17	—	37				60F
Total Unit 17		15,920	16,868				

ESTIMATED STEEL QUANTITIES

REF. NO.	LOCATION (UNIT NO.)	ITEM 202 PORTIONS OF STRUCTURE REMOVED (LBS.)	ITEM 513 STRUCTURAL STEEL (LBS.)	ITEM 513 CURB PLATES (LBS.)	ITEM 513 EXP.JT. STEEL (LBS.)	ITEM SPECIAL CLEAN & PAINT EXISTING STRUCTURAL STEEL (SQ.FT.)	FOR DETAILS SEE SHEET
57H	18	809	—				
58H	18	1,280	1,272				60F
59H	18	622	632				60F
60H	18	—	136				60F
61H	18	—	68				60F
62H	18	357	308				60F
63H	18	—	24				60F
64H	18	1,242	1,184				60F
65H	18	—	89				60F
66H	18	1,306	1,254				60G
67H	18	1,306	1,254				60G
68H	18	—	202				60G
69H	18	1,197	1,138				60G
70H	18	1,246	1,187				60G
Total Unit 18		9,365	8,748				
71H	19	1,284	1,250				60G
72H	19	387	—				
73H	19	—	36				60G
74H	19	—	36				60G
Total Unit 19		1,671	1,322				

ESTIMATED STEEL QUANTITIES

REF. NO.	LOCATION (UNIT NO.)	ITEM 202 PORTIONS OF STRUCTURE REMOVED (LBS.)	ITEM 513 STRUCTURAL STEEL (LBS.)	ITEM 513 CURB PLATES (LBS.)	ITEM 513 EXP.JT. STEEL (LBS.)	ITEM SPECIAL CLEAN & PAINT EXISTING STRUCTURAL STEEL (SQ.FT.)	FOR DETAILS SEE SHEET
75H	20	580	1,018				60G
76H	20	64	125				60G
77H	20	50	57				60G
78H	20	1,418	1,314				60H
79H	20	117	108				60H
95H	20	118	106				60H
Total Unit 20		2,347	2,728				
80H	21	6,912	6,090				60H
81H	21	292	243				60H
Total Unit 21		7,204	6,333				
82H	22	558	870				60H
83H	22	—	136				60H
84H	22	—	16				60H
Total Unit 22		558	1,022				

ESTIMATED STEEL QUANTITIES

REF. NO.	LOCATION (UNIT NO.)	ITEM 202 PORTIONS OF STRUCTURE REMOVED (LBS.)	ITEM 513 STRUCTURAL STEEL (LBS.)	ITEM 513 CURB PLATES (LBS.)	ITEM 513 EXP.JT. STEEL (LBS.)	ITEM SPECIAL CLEAN & PAINT EXISTING STRUCTURAL STEEL (SQ.FT.)	FOR DETAILS SEE SHEET
85H	23	—	52				60H
86H	23	—	87				60H
87H	23	—	69				60H
88H	23	—	87				60H
89H	23	—	69				60H
90H	23	54	54				60J
91H	23	131	112				60J
Total Unit 23		185	530				

ESTIMATED STEEL QUANTITIES

REF. NO.	LOCATION (UNIT NO.)	ITEM 202 PORTIONS OF STRUCTURE REMOVED (LBS.)	ITEM 513 STRUCTURAL STEEL (LBS.)	ITEM 513 CURB PLATES (LBS.)	ITEM 513 EXP.JT. STEEL (LBS.)	ITEM SPECIAL CLEAN & PAINT EXISTING STRUCTURAL STEEL (SQ.FT.)	FOR DETAILS SEE SHEET
92H	24	—	111				60J
93H	24	2,137	2,153				60J
94H	24	146	127				60J
Total Unit 24		2,283	2,391				
96H	25	7,954	7,562				60J
Total Unit 25		7,954	7,562				

Sheet added 5-17-85

EUTHENICS INC.
CONSULTING ENGINEERS
CLEVELAND OHIO

REHABILITATION OF TOWER CITY BRIDGES
PROSPECT AVE., HURON ROAD,
WEST 2ND., 3RD. & 6TH. ST. VIADUCTS
ESTIMATED STEEL QUANTITIES
UNITS 17 THRU 25 & WEST 6th. ST.
HURON RD. PHASE IV

CLEVELAND CUYAHOGA COUNTY OHIO

Made LJD	Trcd. JSC	Ckd. JSC	Rev. RAB	Scale:
Date 5-9-85	Date 5-9-85	Date 5-9-85	Date 5-9-85	Sheet 60B

ODOT 5-10-85 TES

FHWA REGION	STATE	PROJECT	
5	OHIO	IX-ID99(9)	

60C

CUYAHOGA COUNTY
HURON/PROSPECT BRIDGE

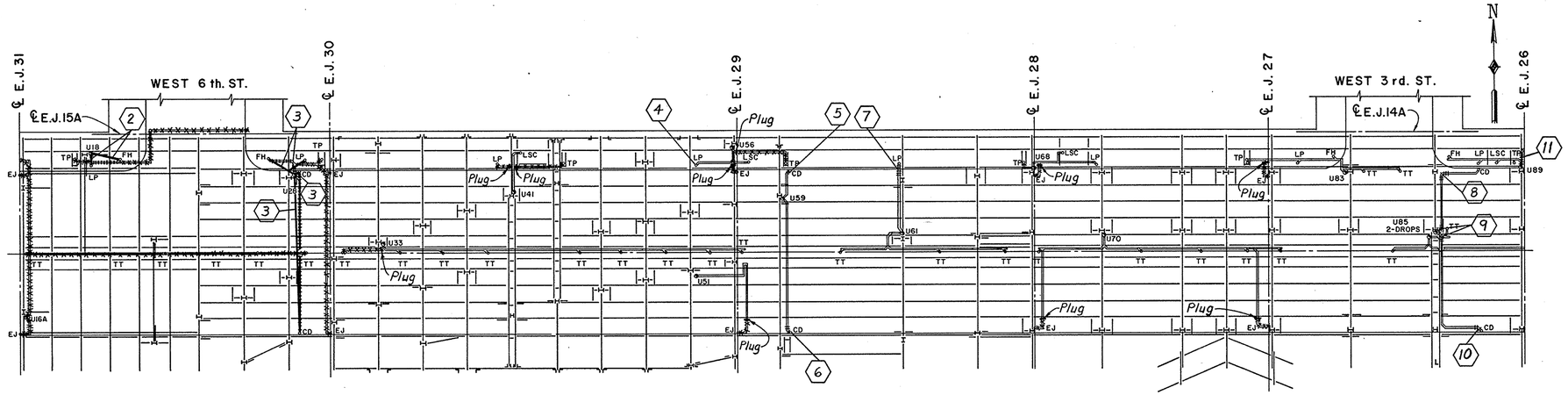

PLAN

LEGEND

U OR B	INDICATES DROP PIPE LOCATIONS
LP	INDICATES LIGHT POLE DRAIN
TP	INDICATES TROLLEY POLE DRAIN
EJ	INDICATES EXPANSION JOINT DRAIN
CD	INDICATES CURB DRAIN
FH	INDICATES FIRE HYDRANT VAULT DRAIN
TT	INDICATES TROLLEY TROUGH DRAIN
LSC	INDICATES LIGHT SPLICE CHAMBER
OBT	INDICATES OHIO BELL TELEPHONE DRAIN
———	INDICATES NEW PIPE
//////	INDICATES PIPES TO BE REMOVED & REPLACED
XXXXX	INDICATES PIPES TO BE REMOVED
•••••	INDICATES PIPES MISSING TO BE REPLACED

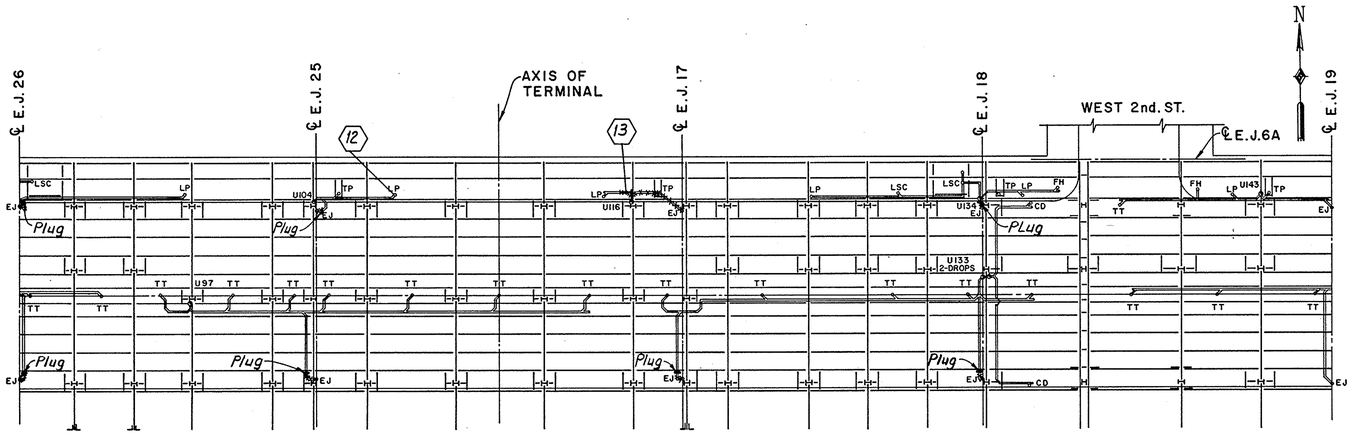

PLAN

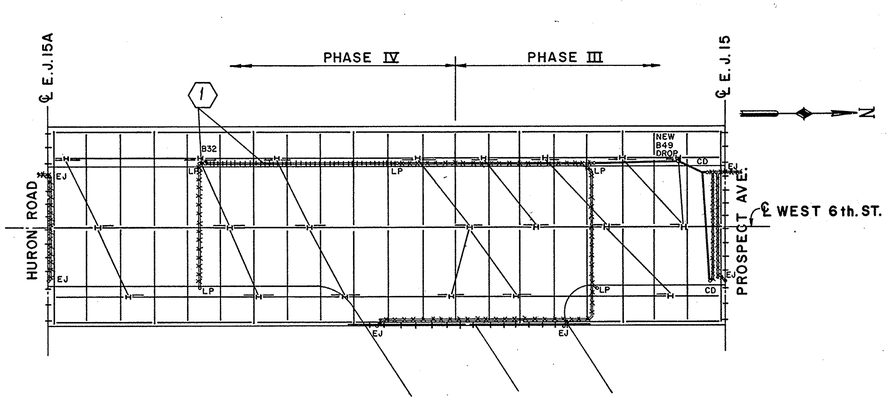

PLAN

NOTES:

1) FOR REF.NO.1 AT COLUMN B32, REF. NO.2 AT COLUMN U18 AND REF. NO.3 AT COLUMN U28 SEE SHEET 94S.
2) FOR REF. NO.4 AT COLUMN U56, REF. NOS. 5 & 6 AT COLUMN U59, REF. NO.7 AT COLUMN U61, REF. NOS. 8,9 & 10 AT COLUMN U85, REF. NO. 11 AT COLUMN U89, REF. NO. 12 AT COLUMN U104 AND REF. NO. 13 AT COLUMN U116 SEE SHEET 95S.
3) PIPE DROP AT COLUMN U16A IS TO BE REMOVED. ALL OTHER DROPS ARE TO BE LEFT IN SERVICE.
4) FOR MISCELLANEOUS DRAINAGE DETAILS SEE SHEET 98.

ESTIMATED DRAINAGE QUANTITIES

REF. NO.	DESCRIPTION	ITEM SPECIAL CLEAN & PAINT EXIST. PIPE (LIN. FT.) PIPE SIZE (IN.)					ITEM 518 PIPE REPLACEMENT (LIN. FT.) PIPE SIZE (IN.)					FOR DETAILS SEE SHEET	DROP LOCATION
			3	4	8		1¼"P.V.C.	3	4	8	4"P.V.C.		
1	L.P. Drains & Drop			32							86	94S	B32
2	Hydrant Drain								12			94S	U18
	L.P. Drain & Drop										13	94S	U18
3	Curb Drains									84		94S	U28
	Hydrant Drain								11			94S	U28
	L.P. Drain										13	94S	U28
4	L.P. Drain										3	95S	U56
5	Curb Drain North				4					8		95S	U59

ESTIMATED DRAINAGE QUANTITIES

REF. NO.	DESCRIPTION	ITEM SPECIAL CLEAN & PAINT EXIST. PIPE (LIN. FT.) PIPE SIZE (IN.)					ITEM 518 PIPE REPLACEMENT (LIN. FT.) PIPE SIZE (IN.)					FOR DETAILS SEE SHEET	DROP LOCATION
			3	4	8		1¼"P.V.C.	3	4	8	4"P.V.C.		
6	Curb Drain South				3					9		95S	U59
7	L.P. Drain			3							12	95S	U61
8	Curb Drain									6		95S	U85
9	Drop									14		95S	U85
10	Curb Drain									6		95S	U85
11	L.P. Drain										5	95S	U89
12	L.P. Drain										1	95S	U104
13	L.P. Drain										5	95S	U116

Sheet added 8-6-85

EUTHENICS INC.
CONSULTING ENGINEERS
CLEVELAND OHIO

REHABILITATION OF TOWER CITY BRIDGES
PROSPECT AVE., HURON ROAD,
WEST 2ND., 3RD. & 6TH. ST. VIADUCTS
DRAINAGE DETAILS AND ESTIMATED DRAINAGE QUANTITIES
UNITS 17 THRU 25 & WEST 6th. ST.
HURON RD. PHASE IV
CLEVELAND CUYAHOGA COUNTY OHIO

Made JSC	Trcd. JSC	Ckd. LJD	Rev. RAB	Scale:
Date 6-21-85	Date 6-21-85	Date 6-25-85	Date 6-25-85	Sheet 60C

ODOT 6-26-85 TES

FHWA REGION	STATE	PROJECT	
5	OHIO	IX-ID99(9)	

60D

CUYAHOGA COUNTY
HURON / PROSPECT BRIDGE

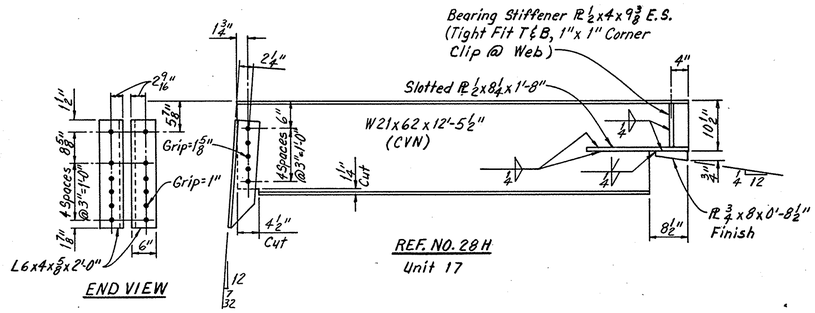

REF. NO. 28 H
Unit 17

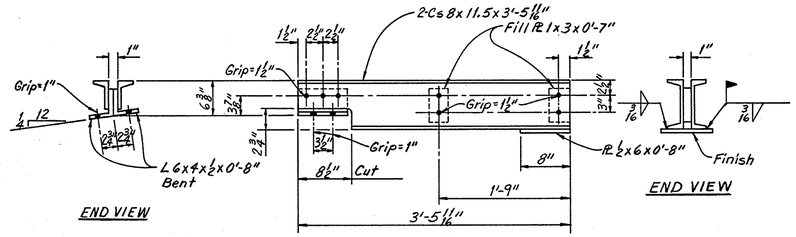

REF. NO. 32 H
Unit 17

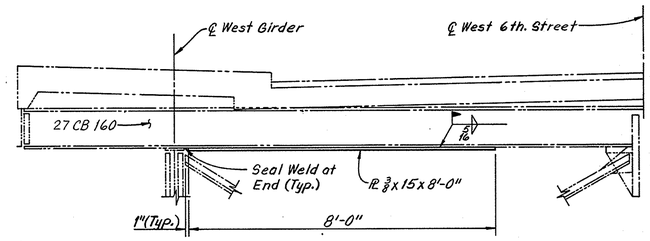

REF. NO. 36 H
West 6th. St.
(Looking North)

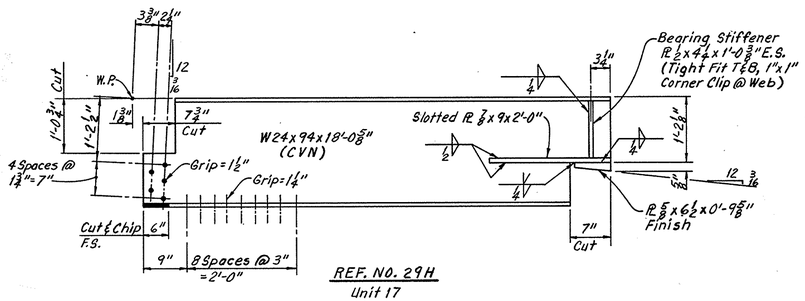

REF. NO. 29 H
Unit 17

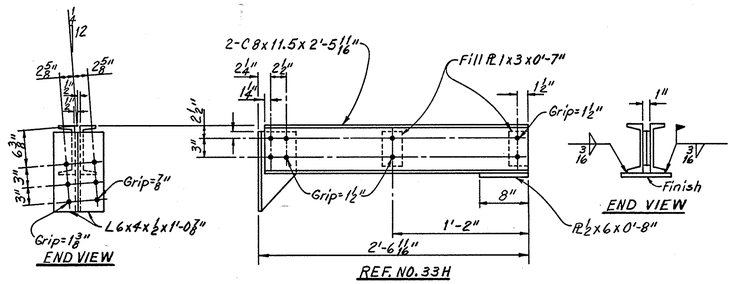

REF. NO. 33 H
Unit 17

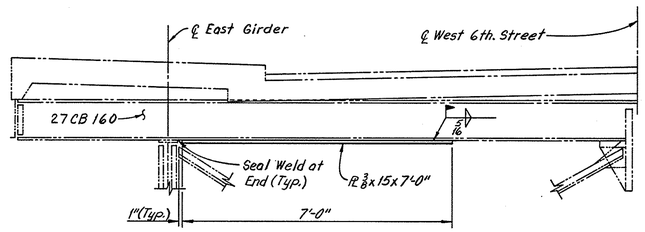

REF. NO. 37 H
West 6th. St.
(Looking South)

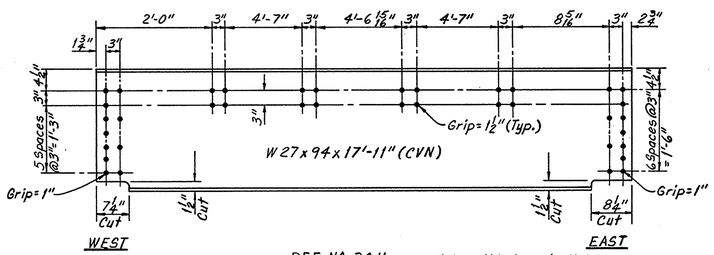

REF. NO. 30 H
Unit 17

Note: All holes shall be 1 1/16" ϕ for 1" ϕ H.S. Bolts.

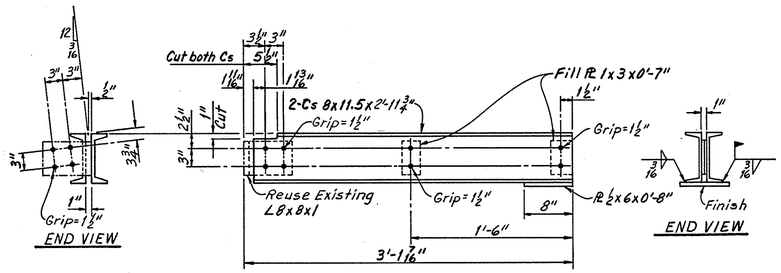

REF. NO. 34 H
Unit 17

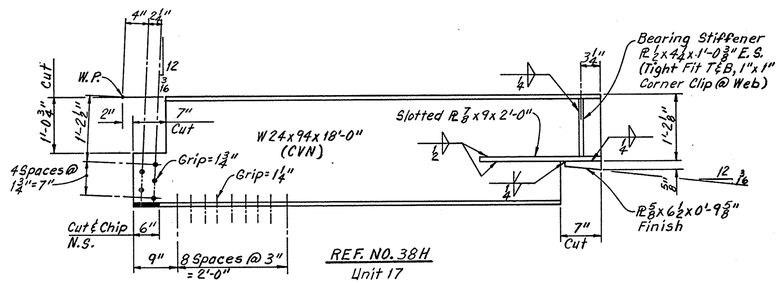

REF. NO. 38 H
Unit 17

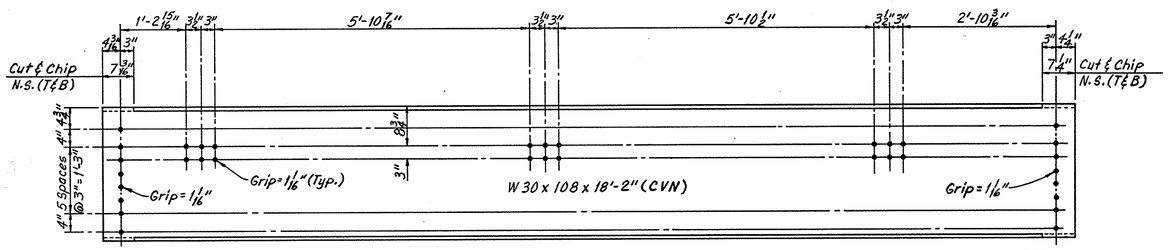

REF. NO. 31 H
Unit 17

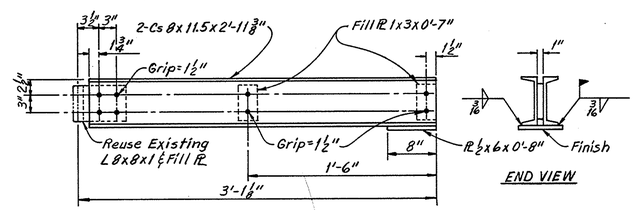

REF. NO. 35 H
Unit 17 (2 Locations)

NOTES:

1. For Detail Location see Sheet 60A.
2. For Estimated Quantities see Sheet 60B.
3. For Abbreviations and Legend see Sheet 60A.

Sheet added 5-9-85

EUTHENICS INC.
CONSULTING ENGINEERS
CLEVELAND OHIO

REHABILITATION OF TOWER CITY BRIDGES
PROSPECT AVE., HURON ROAD,
WEST 2ND., 3RD. & 6TH. ST. VIADUCTS
HURON RD.
STEEL REPAIR DETAILS
PHASE IV

CLEVELAND CUYAHOGA COUNTY OHIO

Made LJD	Trcd. JSC	Ckd. JSC	Rev. RAB	Scale:
Date 3-27-85	Date 3-28-85	Date 3-28-85	Date 3-29-85	Sheet 60D

ODOT 4-3-85 TES

FHWA REGION	STATE	PROJECT	
5	OHIO	IX-ID99(9)	

60E

CUYAHOGA COUNTY
HURON/PROSPECT BRIDGE

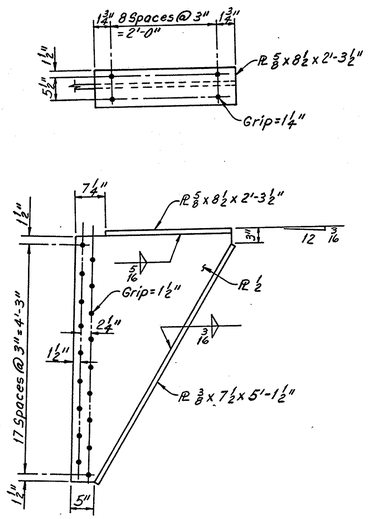

REF. NOS. 39H & 40H
Unit 17

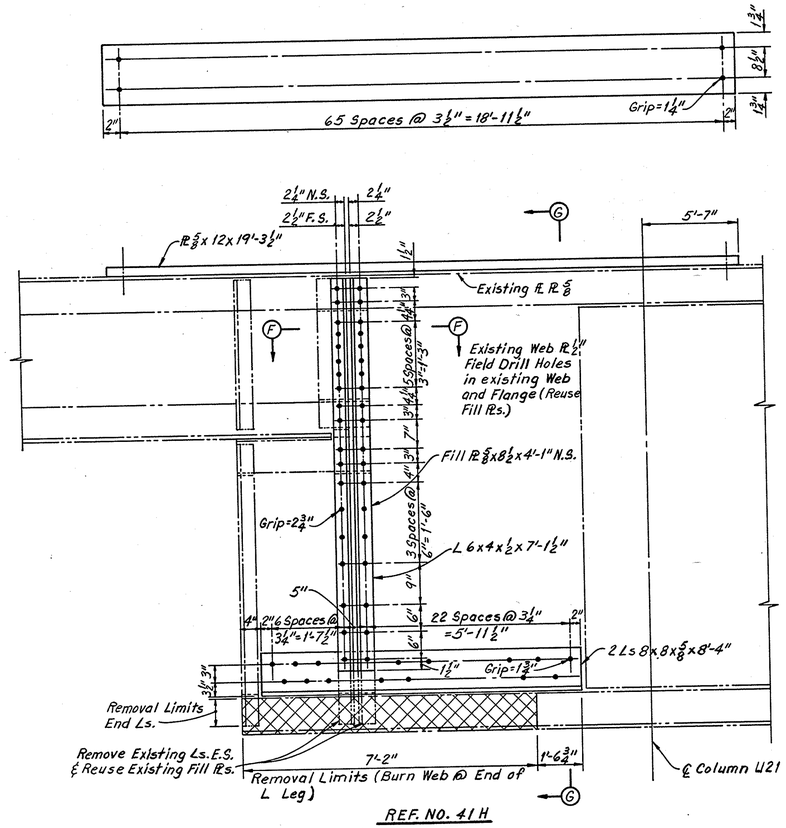

REF. NO. 41H
Unit 17

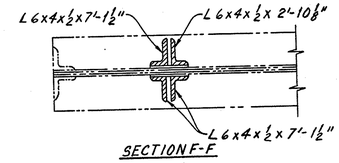

SECTION F-F

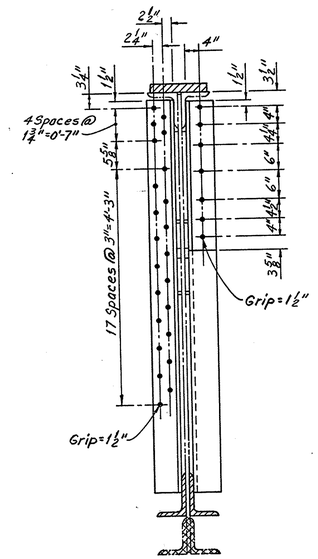

SECTION G-G

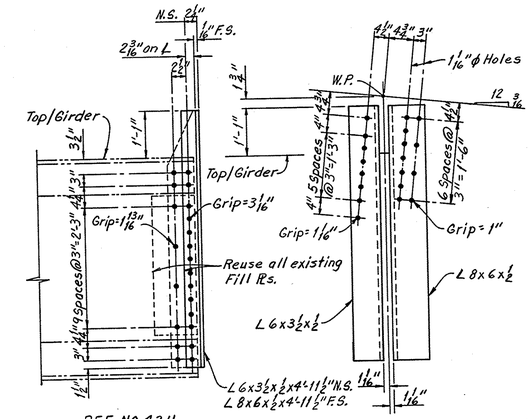

REF. NO. 42H
Unit 17
(Looking West)

END VIEW

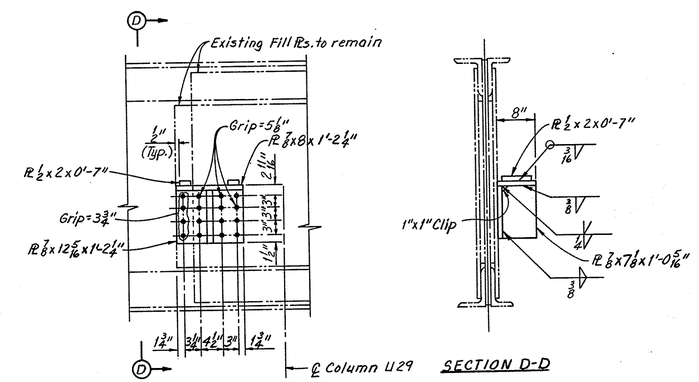

REF. NO. 47H
Unit 17
(Looking East)

SECTION D-D

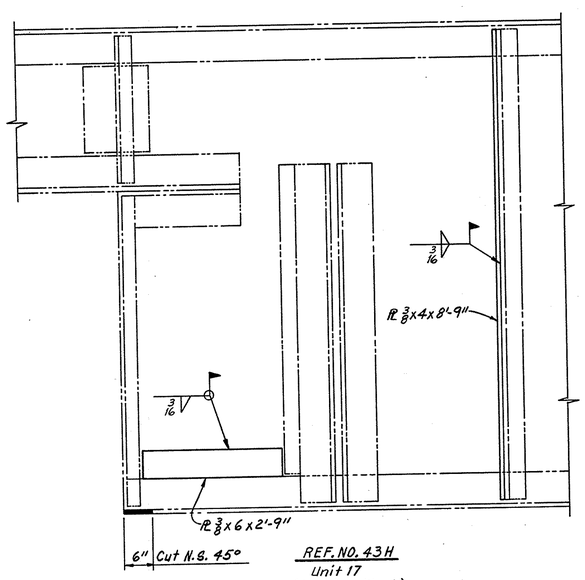

REF. NO. 43H
Unit 17
(Looking West)

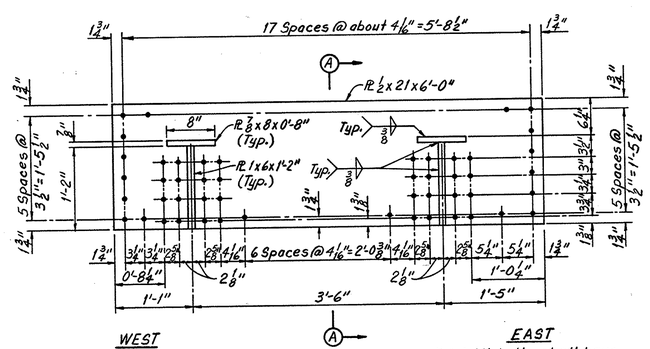

WEST

REF. NO. 44H
West 6th. St.
(Looking North)

EAST

Note: All bolts shall have a Grip of 1/8".

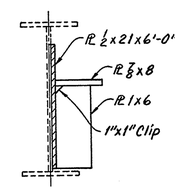

SECTION A-A

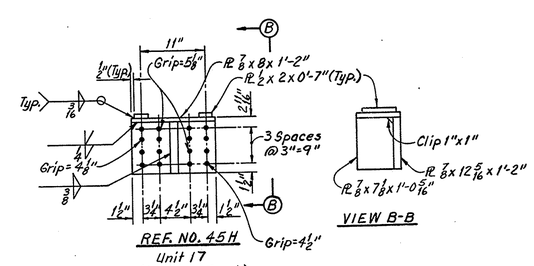

REF. NO. 45H
Unit 17
(Looking East)

VIEW B-B

NOTES:

1. For Detail Location see Sheet 60A.
2. For Estimated Quantities see Sheet 60B.
3. For Abbreviations and Legend see Sheet 60A.

Sheet added 5-9-85

EUTHENICS INC.
CONSULTING ENGINEERS
CLEVELAND OHIO

REHABILITATION OF TOWER CITY BRIDGES
PROSPECT AVE., HURON ROAD,
WEST 2ND., 3RD. & 6TH. ST. VIADUCTS

HURON RD.

STEEL REPAIR DETAILS

PHASE IV

CLEVELAND CUYAHOGA COUNTY OHIO

Mode LJD	Trcd. JSC	Ckd. JSC	Rev. RAB	Scale:
Date 3-25-85	Date 3-26-85	Date 3-26-85	Date 3-27-85	Sheet 60E

ODOT 4-3-85 TED

FHWA REGION	STATE	PROJECT	
5	OHIO	IX-ID99(9)	

60F

CUYAHOGA COUNTY
HURON/PROSPECT BRIDGE

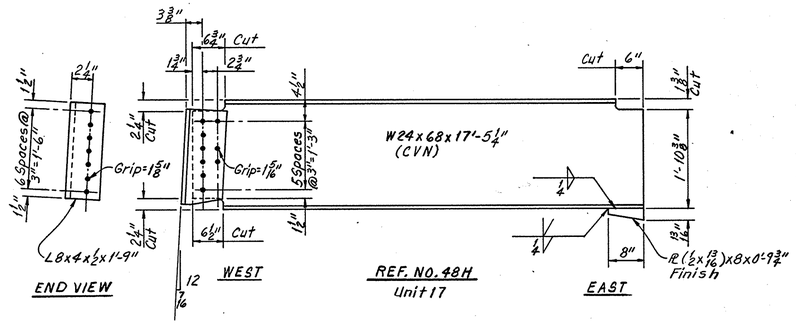

REF. NO. 48H
Unit 17

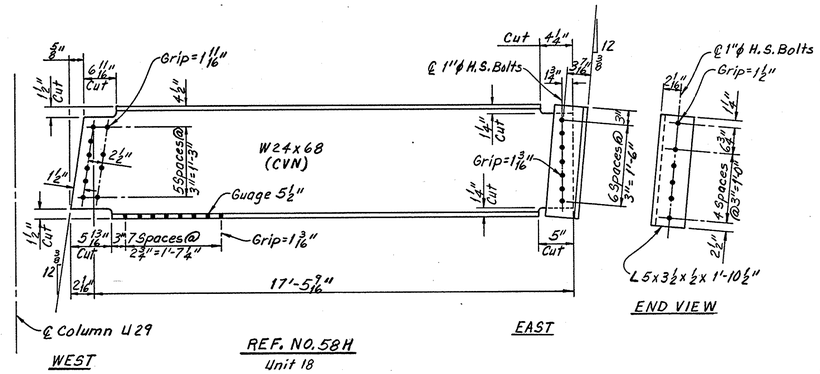

REF. NO. 58H
Unit 18

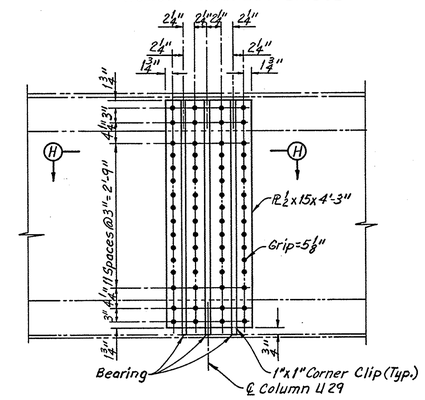

REF. NO. 59H
Unit 18
(Looking West)

TOP COVER PLATES AT E.J. 30		
UNIT NO.	REF. NO.	PLATE SIZE
17	49H	PL ⅜x7x3'-0"
17	50H	PL ⅜x7x2'-0"
17	51H	PL ⅜x9x2'-6"
17	55H	PL ⅜x7x3'-0"
17	56H	PL ⅜x9x3'-0"

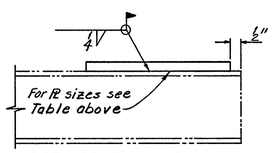

REF. NOS. 49H, 50H, 51H, 55H & 56H
Unit 17

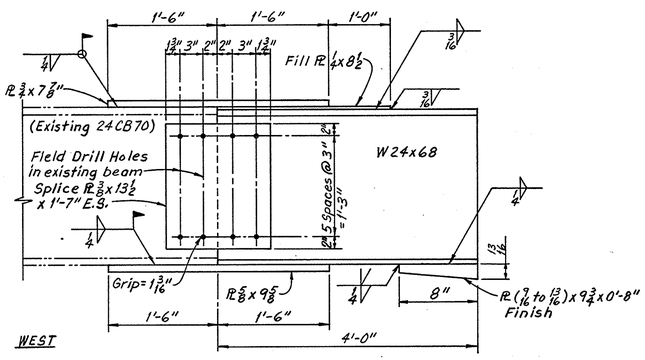

REF. NO. 52H
Unit 17

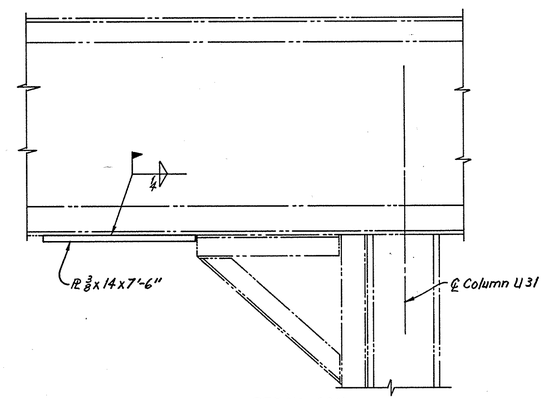

REF. NO. 60H
Unit 18
(Looking West)

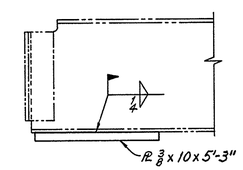

REF. NO. 61H
Unit 18

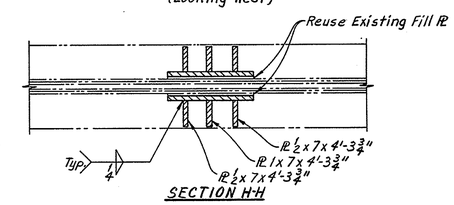

SECTION H-H

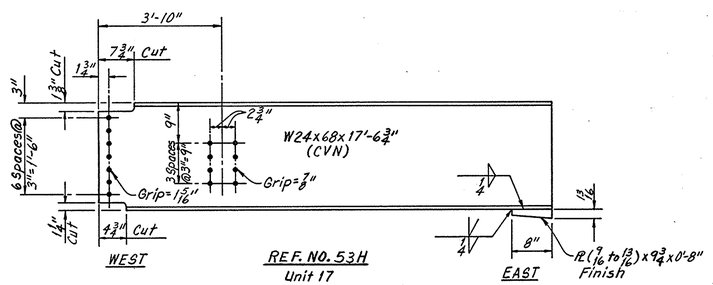

REF. NO. 53H
Unit 17

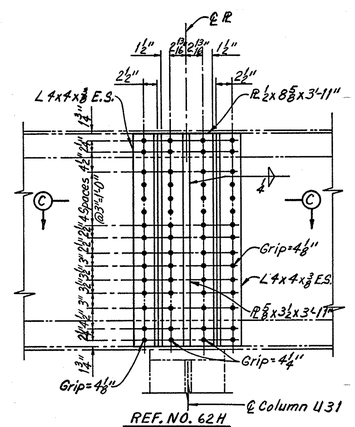

REF. NO. 62H
Unit 18
(Looking East)

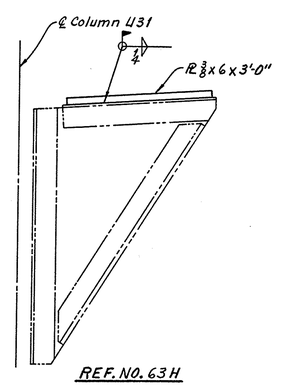

REF. NO. 63H
Unit 18
(Looking North)

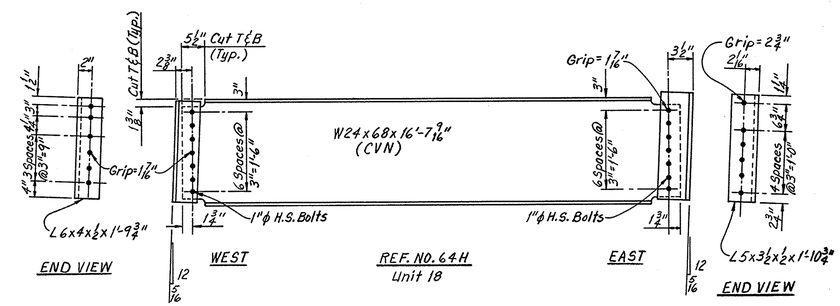

REF. NO. 64H
Unit 18

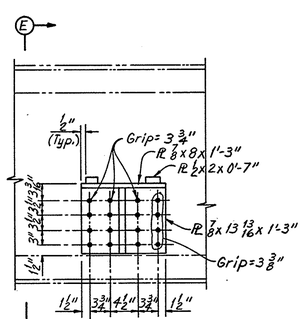

REF. NO. 54H
Unit 17

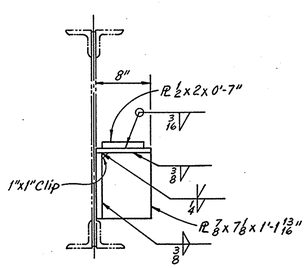

SECTION E-E

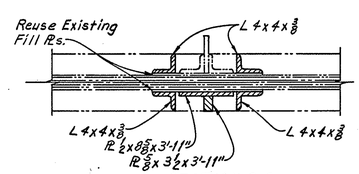

SECTION C-C

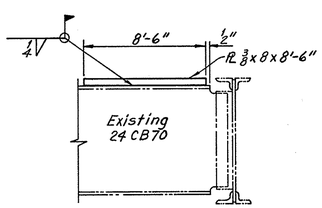

REF. NO. 65H
Unit 18

NOTES:

1. For Detail Location see Sheet 60A.
2. For Estimated Quantities see Sheet 60B.
3. For Abbreviations and Legend see Sheet 60A.

Sheet added 5-9-85

EUTHENICS INC.
CONSULTING ENGINEERS
CLEVELAND OHIO

REHABILITATION OF TOWER CITY BRIDGES
PROSPECT AVE., HURON ROAD,
WEST 2ND., 3RD. & 6TH. ST. VIADUCTS

HURON RD.
STEEL REPAIR DETAILS
PHASE IV

CLEVELAND CUYAHOGA COUNTY OHIO

Made LJD	Trcd. JSC	Ckd. JSC	Rev. RAB	Scale:
Date 3-29-85	Date 4-1-85	Date 4-1-85	Date 4-2-85	Sheet 60F

ODOT 4-3-85 TES

FHWA REGION	STATE	PROJECT	
5	OHIO	IX-ID99(9)	

60G

CUYAHOGA COUNTY
HURON/PROSPECT BRIDGE

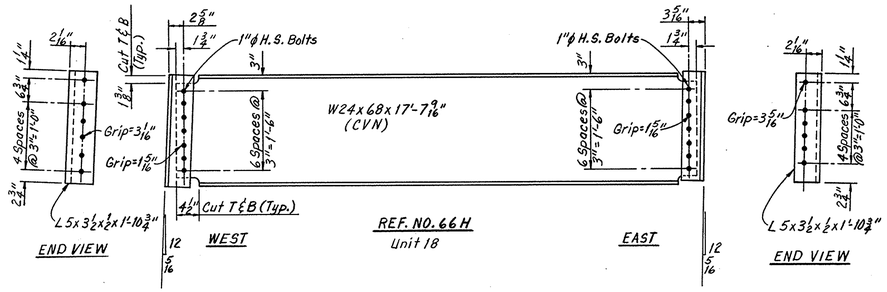

REF. NO. 66H
Unit 18

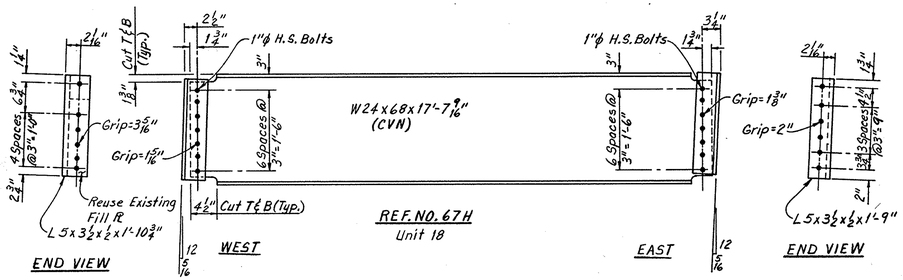

REF. NO. 67H
Unit 18

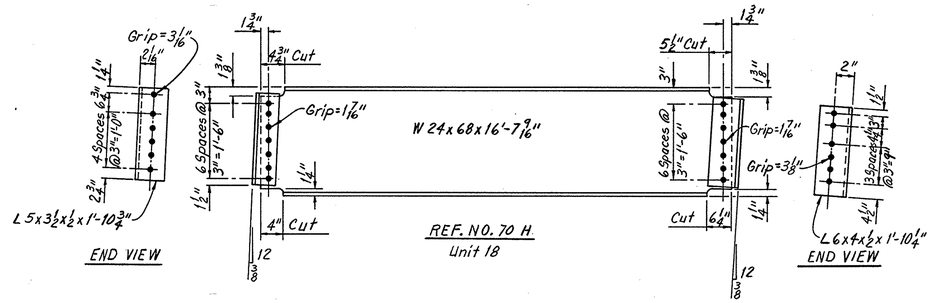

REF. NO. 70 H
Unit 18

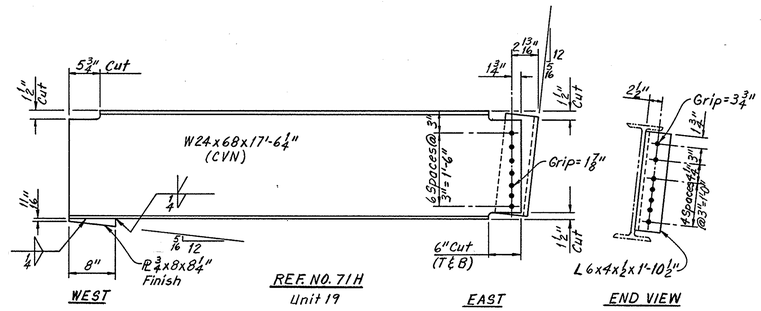

REF. NO. 71H
Unit 19

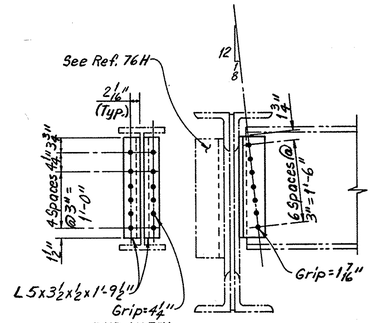

REF. NO. 77H
Unit 20

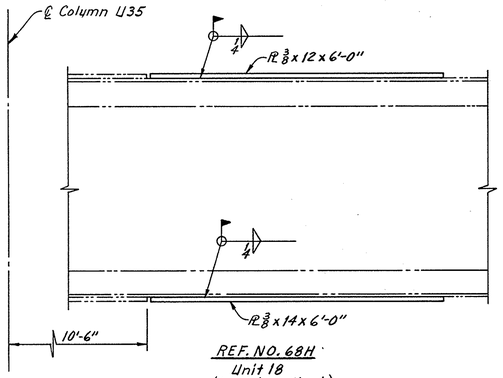

REF. NO. 68H
Unit 18
(Looking West)

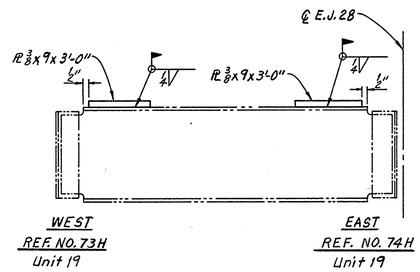

REF. NO. 73H
Unit 19

REF. NO. 74H
Unit 19

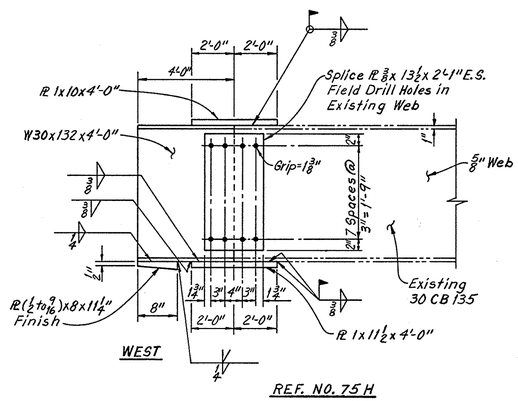

REF. NO. 75 H
Unit 20

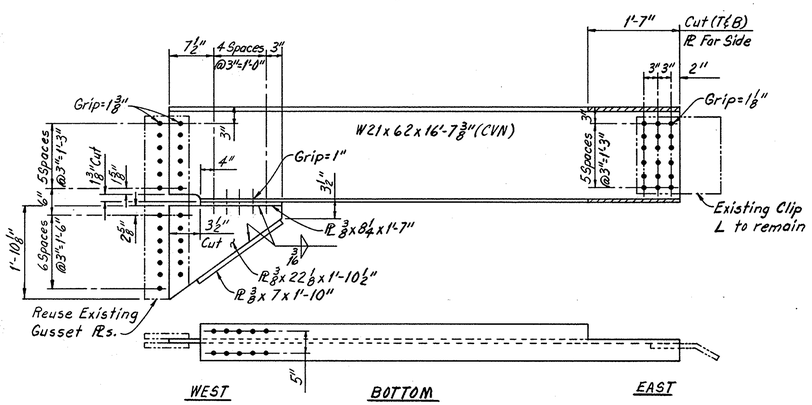

REF. NO. 69 H
Unit 18

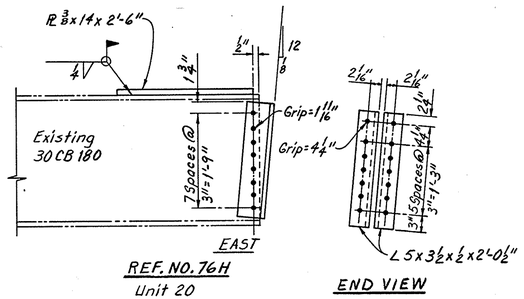

REF. NO. 76H
Unit 20

NOTES:

1. For Detail Location see Sheet 60A.
2. For Estimated Quantities see Sheet 60B.
3. For Abbreviations and Legend see Sheet 60A.

Sheet added 5-9-85

EUTHENICS INC.
CONSULTING ENGINEERS
CLEVELAND OHIO

REHABILITATION OF TOWER CITY BRIDGES
PROSPECT AVE., HURON ROAD,
WEST 2ND., 3RD. & 6TH. ST. VIADUCTS
HURON RD.
STEEL REPAIR DETAILS
PHASE IV

CLEVELAND CUYAHOGA COUNTY OHIO

Mode LJD	Trcd. JSC	Ckd. JSC	Rev. RAB	Scale:
Date 4-25-85	Date 4-26-85	Date 4-26-85	Date 4-26-85	Sheet 60G

ODOT 4-26-85 TES

FHWA REGION	STATE	PROJECT	
5	OHIO	IX-ID99(9)	

60H

CUYAHOGA COUNTY
HURON/PROSPECT BRIDGE

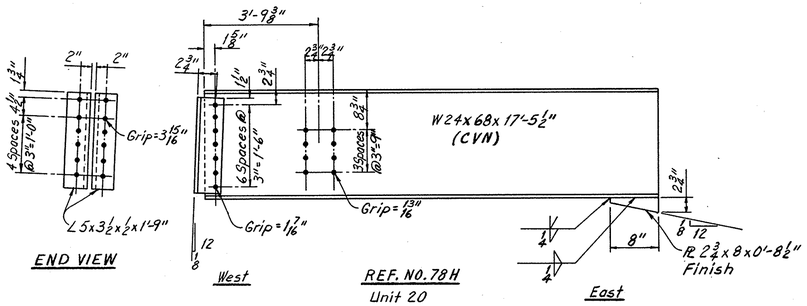

REF. NO. 78H
Unit 20

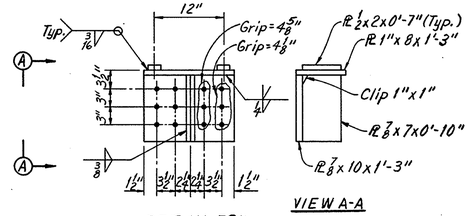

REF. NO. 79H
Unit 20

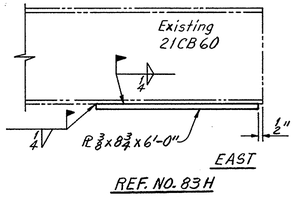

REF. NO. 83H
Unit 22

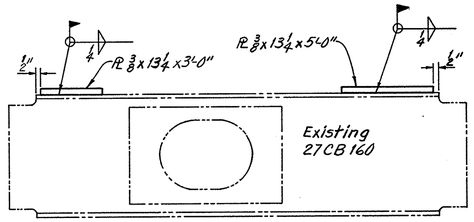

WEST
REF. NO. 85H
Unit 23

EAST
REF. NO. 86H
Unit 23

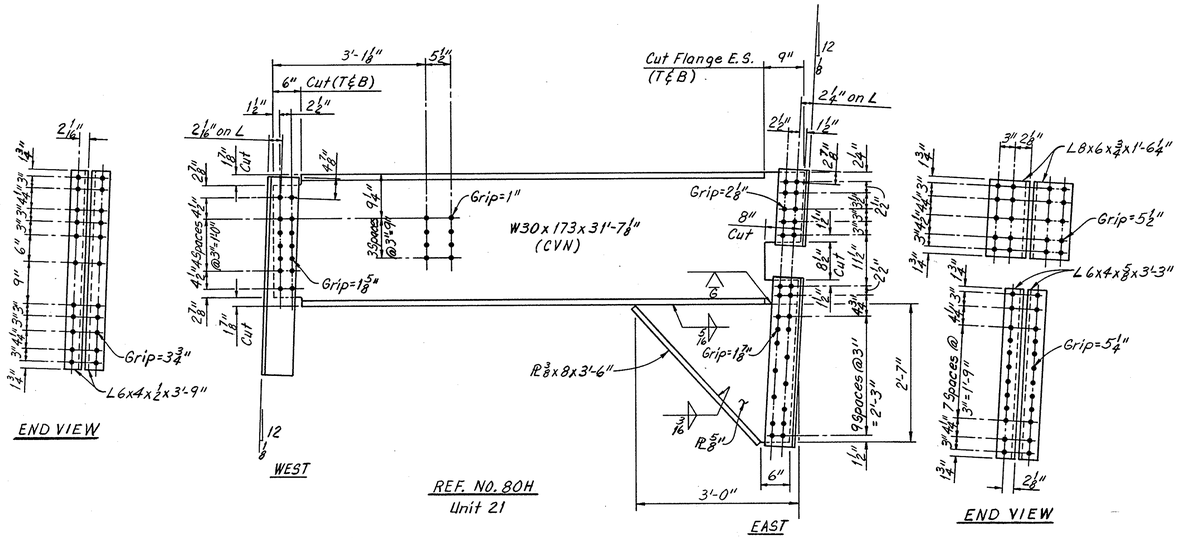

REF. NO. 80H
Unit 21

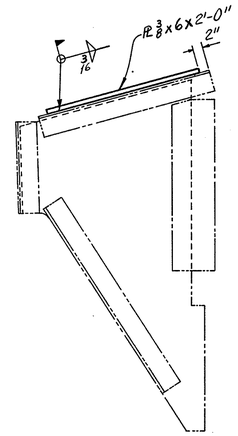

REF. NO. 84H
Unit 22

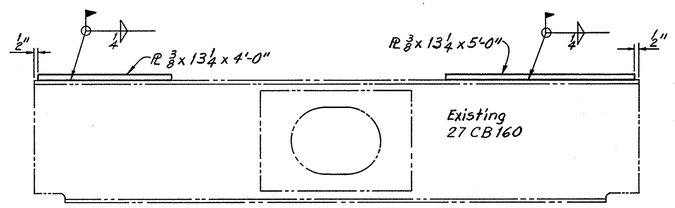

WEST
REF. NO. 87H
Unit 23

EAST
REF. NO. 88H
Unit 23

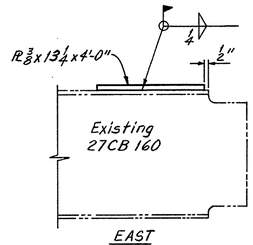

EAST
REF. NO. 89H
Unit 23

NOTES:

1. For Detail Location see Sheet 60A.
2. For Estimated Quantities see Sheet 60B.
3. For Abbreviations and Legend see Sheet 60A.

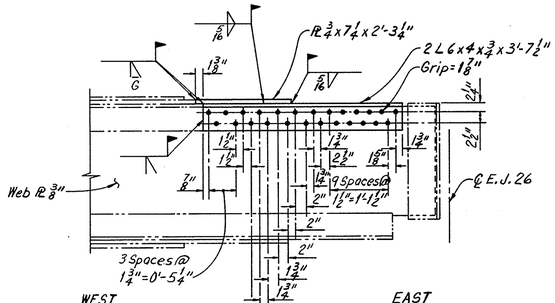

REF. NO. 81H
Unit 21

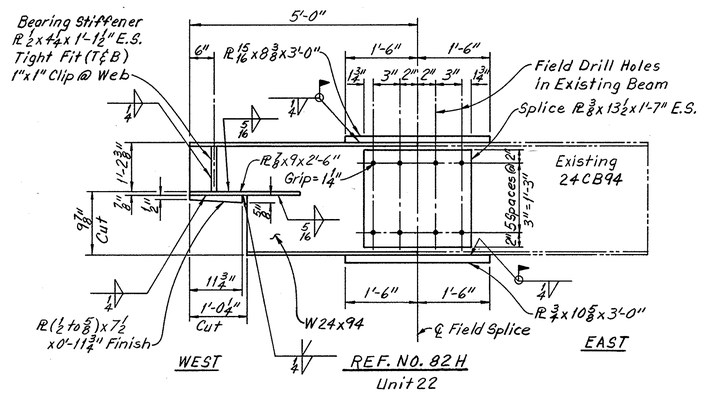

REF. NO. 82H
Unit 22

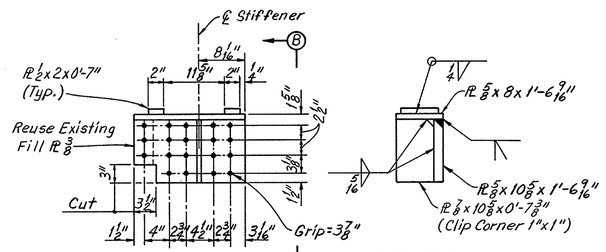

REF. NO. 95H
Unit 20

Sheet added 5-17-85

EUTHENICS INC.
CONSULTING ENGINEERS
CLEVELAND OHIO

REHABILITATION OF TOWER CITY BRIDGES
PROSPECT AVE., HURON ROAD,
WEST 2ND., 3RD. & 6TH. ST. VIADUCTS
HURON RD.
STEEL REPAIR DETAILS
PHASE IV

CLEVELAND CUYAHOGA COUNTY OHIO

Made LJD	Trcd. JSC	Ckd. JSC	Rev. RAB	Scale:
Date 5-7-85	Date 5-8-85	Date 5-8-85	Date 5-8-85	Sheet 60H

ODOT 5-10-85 TES

FHWA REGION	STATE	PROJECT	
5	OHIO	IX-ID99(9)	

60J

CUYAHOGA COUNTY
HURON/PROSPECT BRIDGE

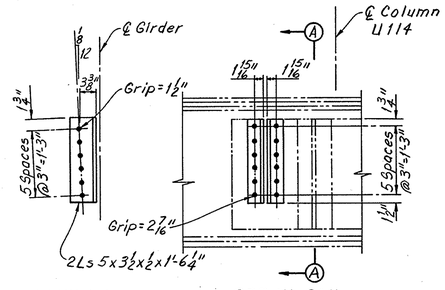

VIEW A-A

REF. NO. 90H
Unit 23

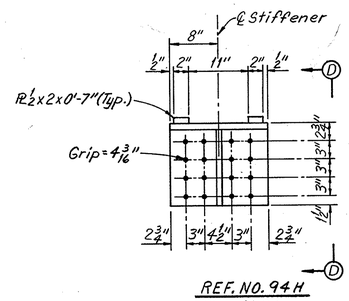

REF. NO. 94H
Unit 24

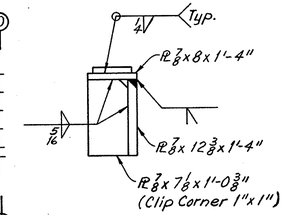

VIEW D-D

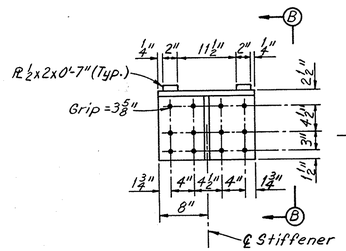

REF. NO. 91H
Unit 23

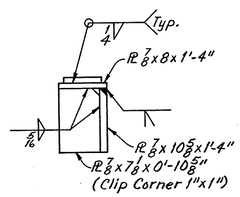

VIEW B-B

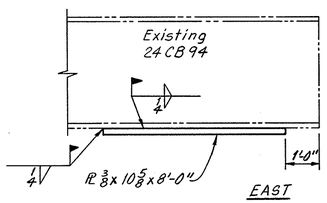

EAST

REF. NO. 92H
Unit 24

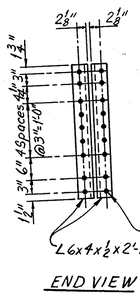

END VIEW

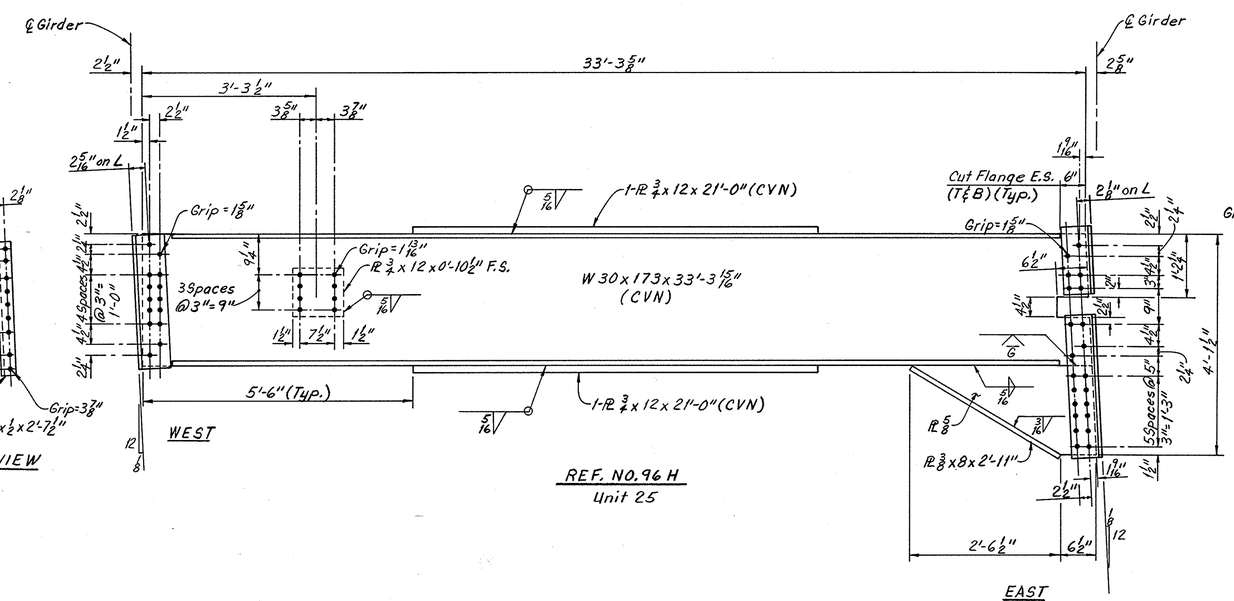

WEST

REF. NO. 96H
Unit 25

EAST

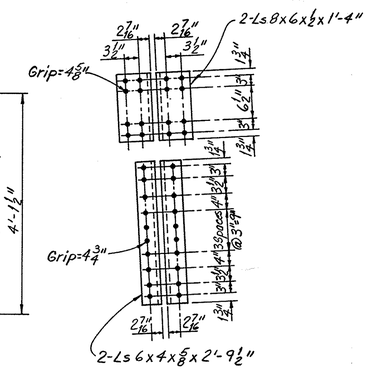

END VIEW

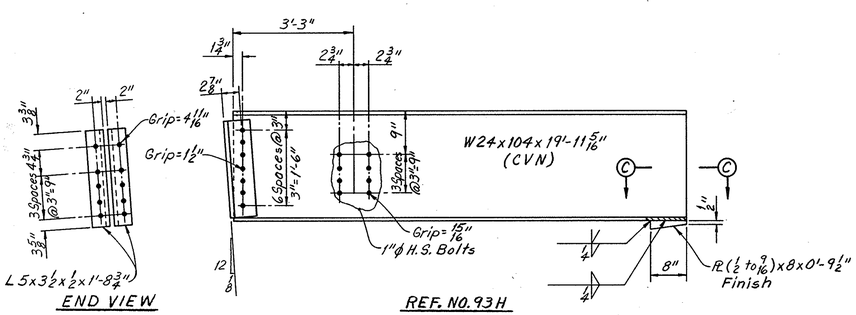

END VIEW

REF. NO. 93H
Unit 24

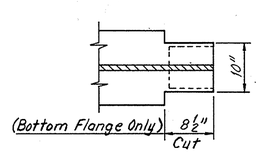

SECTION C-C

NOTES:
1. For Detail Location see Sheet 60A.
2. For Estimated Quantities see Sheet 60B.
3. For Abbreviations and Legend see Sheet 60A.

Sheet added 5-17-85

EUTHENICS INC.
CONSULTING ENGINEERS
CLEVELAND OHIO

REHABILITATION OF TOWER CITY BRIDGES
PROSPECT AVE., HURON ROAD,
WEST 2ND., 3RD. & 6TH. ST. VIADUCTS
HURON RD.
STEEL REPAIR DETAILS
PHASE IV

CLEVELAND CUYAHOGA COUNTY OHIO

Mode LJD	Trcd. JSC	Ckd. JSC	Rev. RAB	Scale:
Date 5-8-85	Date 5-9-85	Date 5-9-85	Date 5-9-85	Sheet 60J

ODOT 5-10-85 TES

FHWA REGION	STATE	PROJECT	
5	OHIO	M-1D99 (9)	

61 / 170

CUYAHOGA COUNTY
HURON / PROSPECT BRIDGE

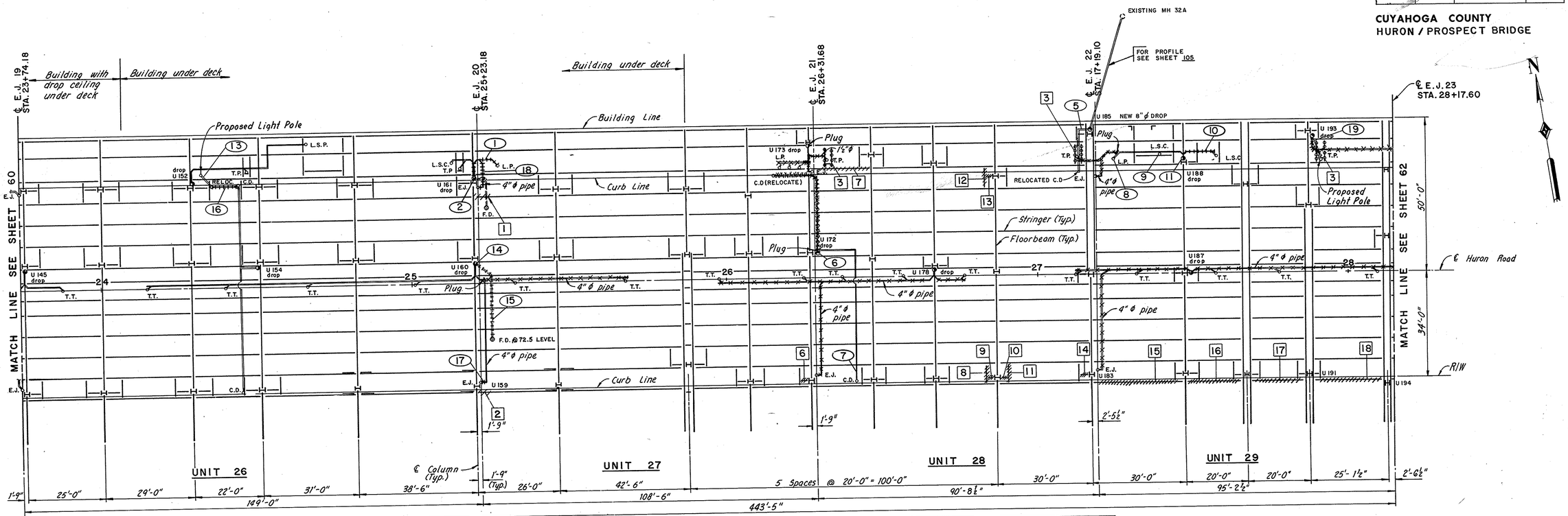

PLAN

ESTIMATED DRAINAGE QUANTITIES

REF. NO.	DESCRIPTION	ITEM SPECIAL CLEAN & PAINT EXIST. PIPE (LIN. FT.) PIPE SIZE (IN.) 3	4	8		ITEM 518 PIPE REPLACEMENT (LIN. FT.) PIPE SIZE (IN.) 3	4	8	ITEM 603 8" CONDUIT TYPE B, as per plan		FOR DETAILS SEE SHEET	DROP LOCATION
1	L.P. Drain	4				8					96	U161
2	U161 Drop		12				20					
											97	U173
4	U173 Drop											
5	Curb Drain							60	30		96	U185
6	U172 Drop			24							96	U172
7	Curb Drain			66				4				
8	L.P. Drain	8	15			4	1					
9	L.S.C. Drain		5								97	U188
10	L.S.C. Drain					12						
11	U188 Drop		28				1					
											96	U154
13	L.P. Drain						7					
14	U160 Drop						18				96	U160
15	F.D.		2				28					
16	Curb Drain						15				96	U154
17	E.J. Drain						6				96	U160
18	E.J. Drain						10				96	U161
19	L.P. Drain		24				10				97	U193
Totals		12	86	90		24	116	64	30			

NOTES:

1. LUMP SUM BID ITEM NO. 202., PIPE REMOVED AND DISPOSED OF, INCLUDES APPROXIMATELY 700LIN. FT. WITHIN UNITS 26 TO 29.
2. THE LENGTHS OF PIPE SHOWN IN THE ESTIMATED DRAINAGE QUANTITIES TABLE FOR BID ITEM SPECIAL CLEAN AND PAINT EXISTING PIPE ARE THE APPROXIMATE LENGTHS OF PIPE TO BE CLEANED AND PAINTED IN UNITS 26 TO 29. THE LENGTHS ARE APPROXIMATE ONLY AND ARE GIVEN TO ASSIST THE CONTRACTOR IN PREPARING HIS BID FOR THIS LUMP SUM ITEM.

ESTIMATED STEEL QUANTITIES

REF. NO.	LOCATION (UNIT NO.)	ITEM 202 PORTIONS OF STRUCTURE REMOVED (LBS.)	ITEM 513 STRUCTURAL STEEL (LBS.)	CURB PLATES (LBS.)	EXP. JT. STEEL (LBS.)	ITEM 514 CLEAN & PAINT EXISTING STRUCTURAL STEEL (SQ. FT.)	FOR DETAILS SEE SHEET
	26			3,318	5,691	2,015	
	27			2,427	5,691	16,445	
1	27	12	12				79
2	27	13	13				79
6	27	513	458				80
Sub Totals		538	483	2,427	5,691	16,445	
	28			2,020	5,691	18,290	
3	28	715	0				—
7	28	1,517	1,517				80
8	28	372	365				80
9	28	511	456				80
10	28	511	456				80
11	28	389	382				80
12	28	372	365				80
13	28	467	411				80
14	28	484	429				80
Sub Totals		5,338	4,381	2,020	5691	18,290	
	29			2,130	5,691	22,320	
3	29	357	0				
15	29	5,700	5,765				81
16	29	1,549	1,549				81
17	29	1,502	1,502				81
18	29	2,731	2,778				81
Sub Totals		11,839	11,594	2,130	5691	22,320	
Totals		17,715	16,458	9,895	22,764	59,070	

NOTES:

1. PIPE DROPS AT COLUMNS U178 AND U187 ARE TO BE REMOVED. ALL OTHER DROPS ARE TO BE LEFT IN SERVICE.
2. FOR MISCELLANEOUS DRAINAGE DETAILS SEE SHEET 98.

Note:
The Areas Shown in Item 514 are Approximate Only and are Given to Assist the Contractor in Preparing his Bid for This Lump Sump Item.

LEGEND

- L.P. — LIGHT POST DRAIN
- T.P. — TROLLEY POLE DRAIN
- E.J. — EXPANSION JOINT DRAIN
- C.D. — CURB DRAIN
- T.T. — TROLLEY TROUGH DRAIN
- L.S.C. — LIGHT SPLICE CHAMBER
- F.H. — FIRE HYDRANT VAULT DRAIN
- PIPES TO BE REMOVED AND REPLACED
- PIPES TO BE REMOVED
- PIPES MISSING TO BE REPLACED
- STRUCTURAL STEEL TO BE REPAIRED
- STRUCTURAL STEEL TO BE REMOVED
- STRUCTURAL STEEL TO BE REPLACED
- (00) DRAINAGE REPAIRS
- [0] STRUCTURAL STEEL REPAIRS
- U00 drop — VERTICAL PIPE DROP AT COLUMN NUMBER
- F.D. — BUILDING FLOOR DRAIN

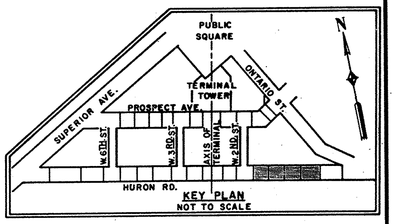

KEY PLAN
NOT TO SCALE

EUTHENICS INC.
CONSULTING ENGINEERS
CLEVELAND OHIO

REHABILITATION OF TOWER CITY BRIDGES
PROSPECT AVE., HURON ROAD,
WEST 2ND., 3RD. & 6TH. ST. VIADUCTS
STREET LEVEL FRAMING AND DRAINAGE
UNIT 26 TO UNIT 29
HURON ROAD

CLEVELAND CUYAHOGA COUNTY OHIO

Made REM	Trcd. REM	Ckd. LJD	Rev. RAB	Scale: 1/16" = 1'-0"
Date 4-12-78	Date 4-13-78	Date 3-11-81	Date 9-4-81	Sheet 61 / 170

FHWA REGION	STATE	PROJECT	
5	OHIO	IX-ID99(9)	

61A
170

CUYAHOGA COUNTY
HURON/PROSPECT BRIDGE

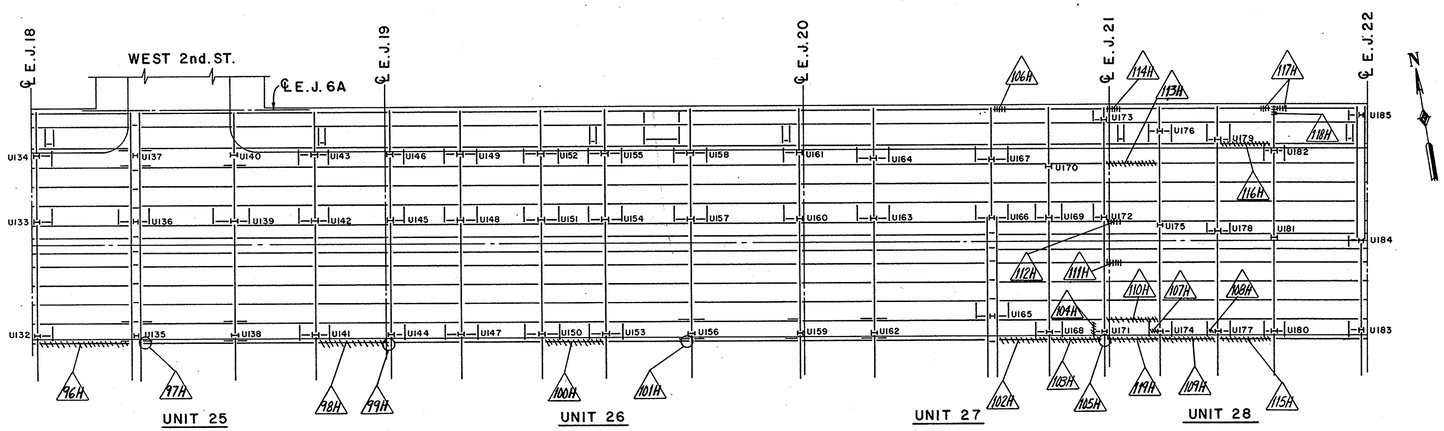

PLAN

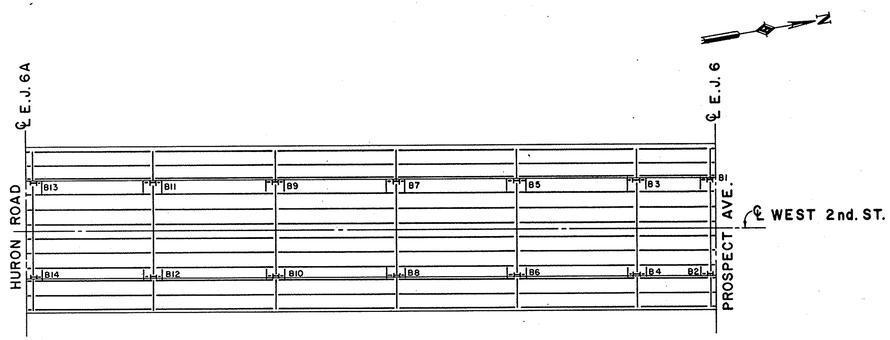

PLAN

ESTIMATED STEEL QUANTITIES

REF. NO.	LOCATION (UNIT NO.)	ITEM 202 PORTIONS OF STRUCTURE REMOVED (LBS.)	ITEM 513 STRUCTURAL STEEL (LBS.)	ITEM 513 CURB PLATES (LBS.)	ITEM 513 EXP. JT. STEEL (LBS.)	ITEM SPECIAL CLEAN & PAINT EXISTING STRUCTURAL STEEL (SQ. FT.)	FOR DETAILS SEE SHEET
96H	25	7,954	7,562				61C
97H	25	—	111				61C
98H	25	2,926	2,892				61C
99H	25	175	153				61C
100H	26	2,185	2,195				61C
101H	26	131	114				61C
102H	27	1,538	1,557				61C
103H	27	1,631	1,638				61C
104H	27	394	420				61C
105H	28	132	120				61C
106H	27	—	59				61D
107H	28	90	91				61D
108H	28	90	91				61D
109H	28	1,512	1,493				61D
110H	28	1,745	1,725				61D
111H	28	—	36				61D
112H	28	—	36				61D
113H	28	1,730	1,719				61D
114H	28	123	123				61D
115H	28	1,630	1,650				61D
116H	28	1,607	1,625				61D
117H	28	306	312				61D
118H	28	100	102				61D
119H	28	1,570	1,578				61D
TOTALS		27,569	27,402				

NOTES:

For Details see Sheets 61C & 61D.
The Following Abbreviations are used:
(N.S.) = Near Side (F.S.) = Far Side
(E.S.) = Each Side (Typ.) = Typical
W.P. = Working Point
H.S. Bolts = High Strength Bolts

LEGEND

- Indicates Structural Steel to be Repaired
- Indicates Structural Steel to be Replaced
- Indicates Structural Steel to be Removed and Not Replaced
- U00 or B00 — Indicates Column Numbers

Sheet added 8-29-85

EUTHENICS INC.
CONSULTING ENGINEERS
CLEVELAND OHIO

REHABILITATION OF TOWER CITY BRIDGES
PROSPECT AVE., HURON ROAD,
WEST 2 ND., 3 RD. & 6 TH. ST. VIADUCTS
STREET LEVEL FRAMING PLAN & ESTIMATED STEEL QUANTITIES
UNITS 25 THRU 28 & WEST 2nd. ST.
HURON RD. PHASE V

CLEVELAND CUYAHOGA COUNTY OHIO

Made JSC	Trcd. JSC	Ckd. LJD	Rev. RAB	Scale:
Date 8-22-85	Date 8-22-85	Date 8-23-85	Date 8-23-85	Sheet 61A

ODOT 8-24-85 TES

FHWA REGION	STATE	PROJECT	
5	OHIO	IX-ID99(9)	

61B
170

CUYAHOGA COUNTY
HURON/PROSPECT BRIDGE

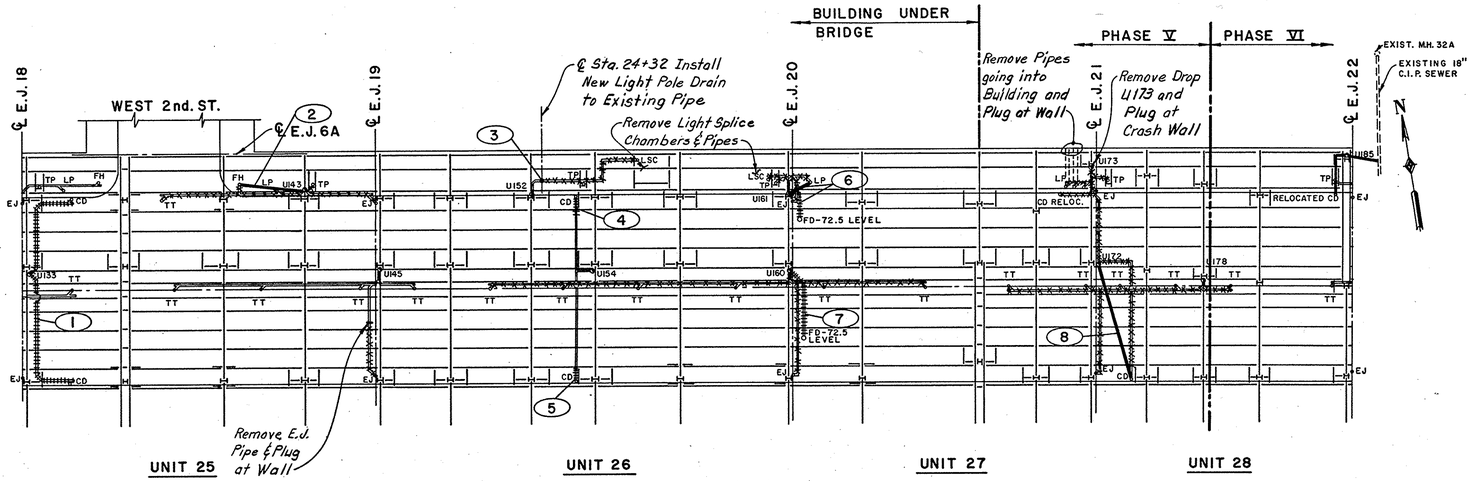

PLAN

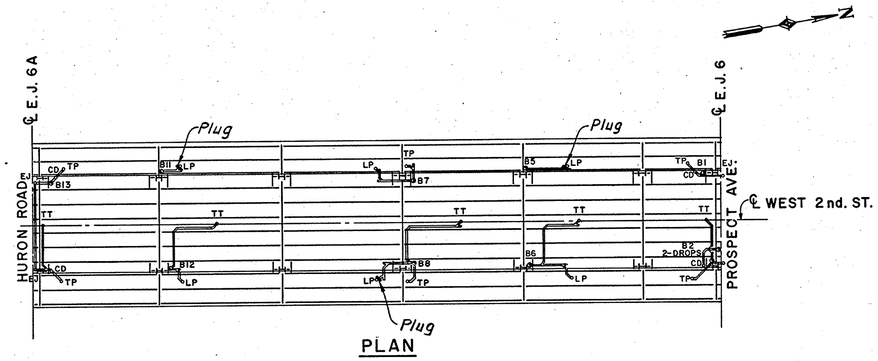

PLAN

0 ESTIMATED DRAINAGE QUANTITIES												
REF. NO.	DESCRIPTION	ITEM SPECIAL CLEAN & PAINT EXIST. PIPE (LIN. FT.)					ITEM 518 PIPE REPLACEMENT (LIN. FT.)					DROP LOCATION
		PIPE SIZE (IN.)					PIPE SIZE (IN.)				FOR DETAILS SEE SHEET	
			3	4	8		1¼"PVC	3	4	8	4"PVC	
1	Curb Drains									101		96S U133
2	Hydrant & Light Pole Drain										29	96S U143
3	Light Pole Drain										12	96S U152
4	Curb Drain North Side									15		96S U154
5	Curb Drain South Side									5		96S U154
6	Light Pole, Floor Drain & Drop										61	96A U161
7	Floor Drain & Drop										46	96A U160
8	Curb Drain & Drop									72		96A U172
TOTALS										193	148	

NOTES:
1) For Drops at Columns U133, U143, U152 and U154 see Sheet 96S.
2) For Drops at Columns U160, U161 and U172 see Sheet 96A.
3) Dimensions to be verified by the Contractor.

LEGEND

U or B	Indicates Drop Pipe Locations
LP	Indicates Light Pole Drain
TP	Indicates Trolley Pole Drain
EJ	Indicates Expansion Joint Drain
CD	Indicates Curb Drain
FH	Indicates Fire Hydrant Vault Drain
TT	Indicates Trolley Trough Drain
LSC	Indicates Light Splice Chamber
OBT	Indicates Ohio Bell Telephone Drain
———	Indicates New Pipe
++++++++	Indicates Pipes to be removed & replaced
-x-x-x-x-	Indicates Pipes to be removed
--------	Indicates Pipes missing to be replaced

Revised LJD 3-13-86

Sheet added 3-26-86

EUTHENICS INC.
CONSULTING ENGINEERS
CLEVELAND OHIO

REHABILITATION OF TOWER CITY BRIDGES
PROSPECT AVE., HURON ROAD,
WEST 2ND., 3RD. & 6TH. ST. VIADUCTS
DRAINAGE DETAILS &
ESTIMATED DRAINAGE QUANTITIES
UNITS 25 THRU 28 & WEST 2nd. ST.
HURON RD. PHASE V

CLEVELAND CUYAHOGA COUNTY OHIO

Made JSC	Trcd. JSC	Ckd. LJD	Rev. RAB	Scale:
Date 2-18-86	Date 3-5-86	Date 3-13-86	Date 3-13-86	Sheet 61B

ODOT 3-17-86 TES

FHWA REGION	STATE	PROJECT	
5	OHIO	IX-ID99(9)	

61C

CUYAHOGA COUNTY
HURON/PROSPECT BRIDGE

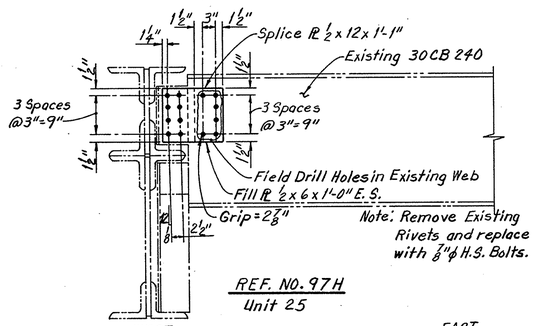

REF. NO. 97H
Unit 25

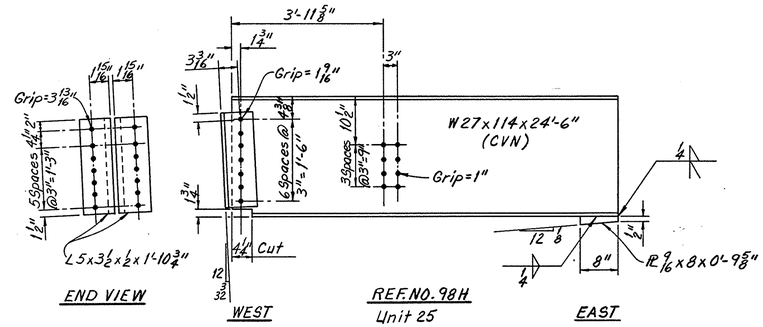

END VIEW

REF. NO. 98H
Unit 25

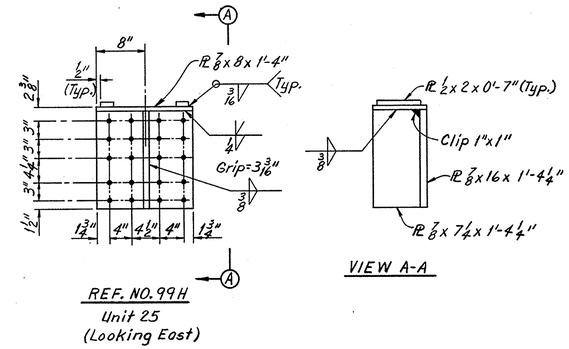

VIEW A-A

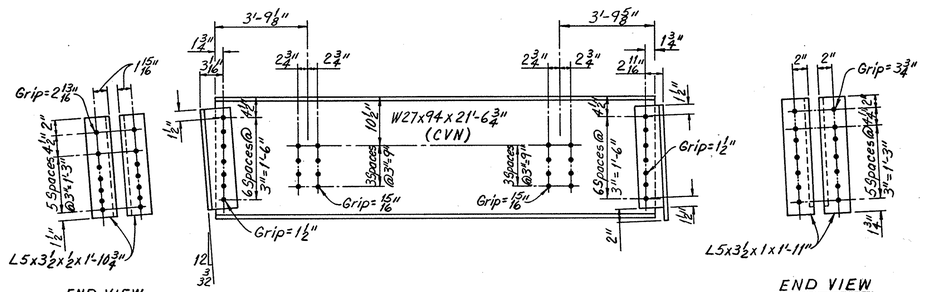

REF. NO. 100H
Unit 26

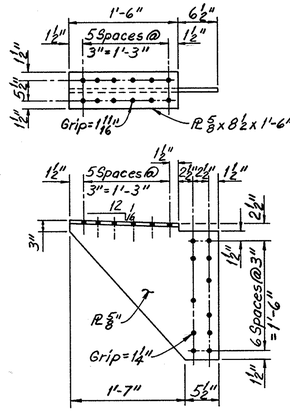

REF. NO. 101H
Unit 26

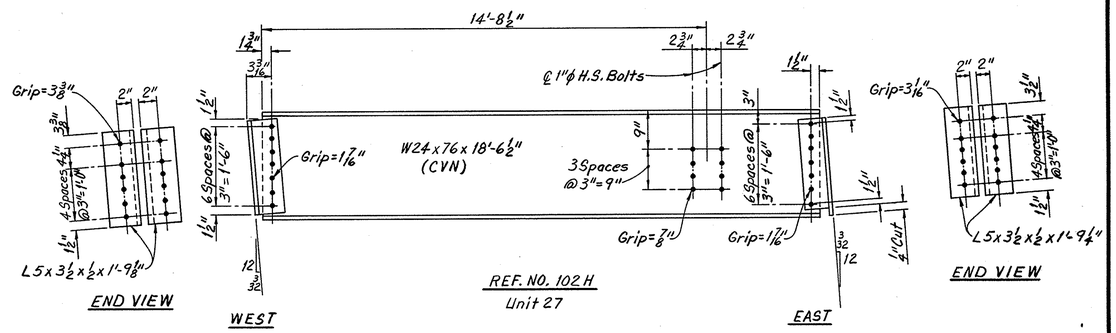

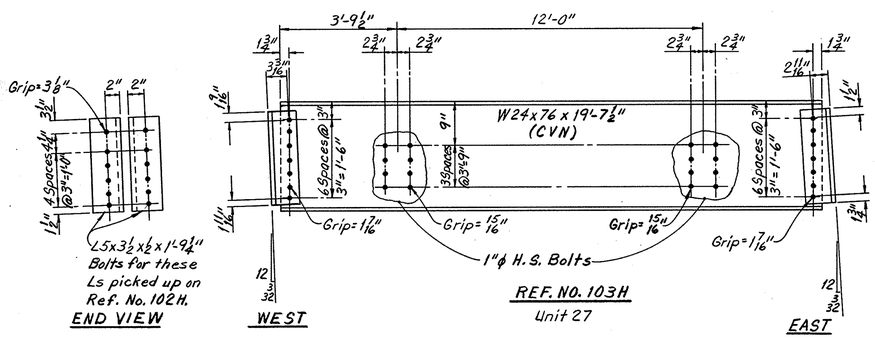

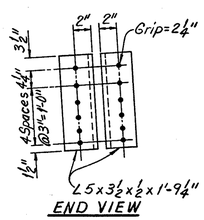

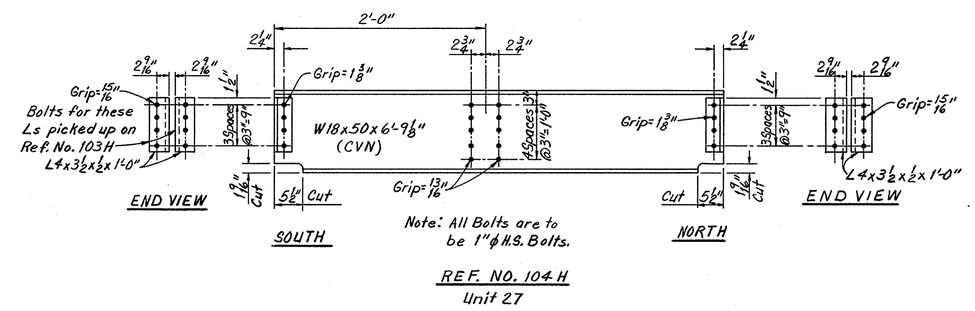

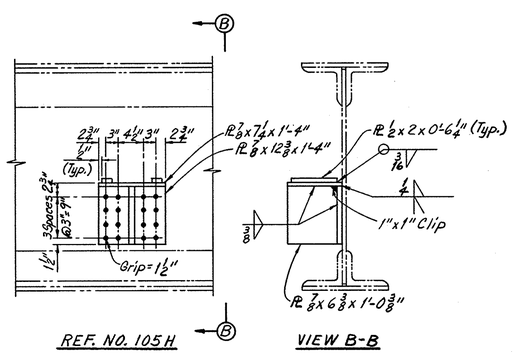

NOTE: For Detail Location & Estimated Quantities see Sheet 61A.

Sheet added 8-6-85

EUTHENICS INC.
CONSULTING ENGINEERS
CLEVELAND OHIO

REHABILITATION OF TOWER CITY BRIDGES
PROSPECT AVE., HURON ROAD,
WEST 2ND., 3RD. & 6TH. ST. VIADUCTS
HURON RD.
STEEL REPAIR DETAILS
PHASE V

CLEVELAND CUYAHOGA COUNTY OHIO

Mode LJD	Trcd. JSC	Ckd. JSC	Rev. RAB	Scale:
Date 7-2-85	Date 7-3-85	Date 7-8-85	Date 7-8-85	Sheet 61C

ODOT 7-19-85 TES

FHWA REGION	STATE	PROJECT	
5	OHIO	IX-ID99(9)	

61D
170

CUYAHOGA COUNTY
HURON/PROSPECT BRIDGE

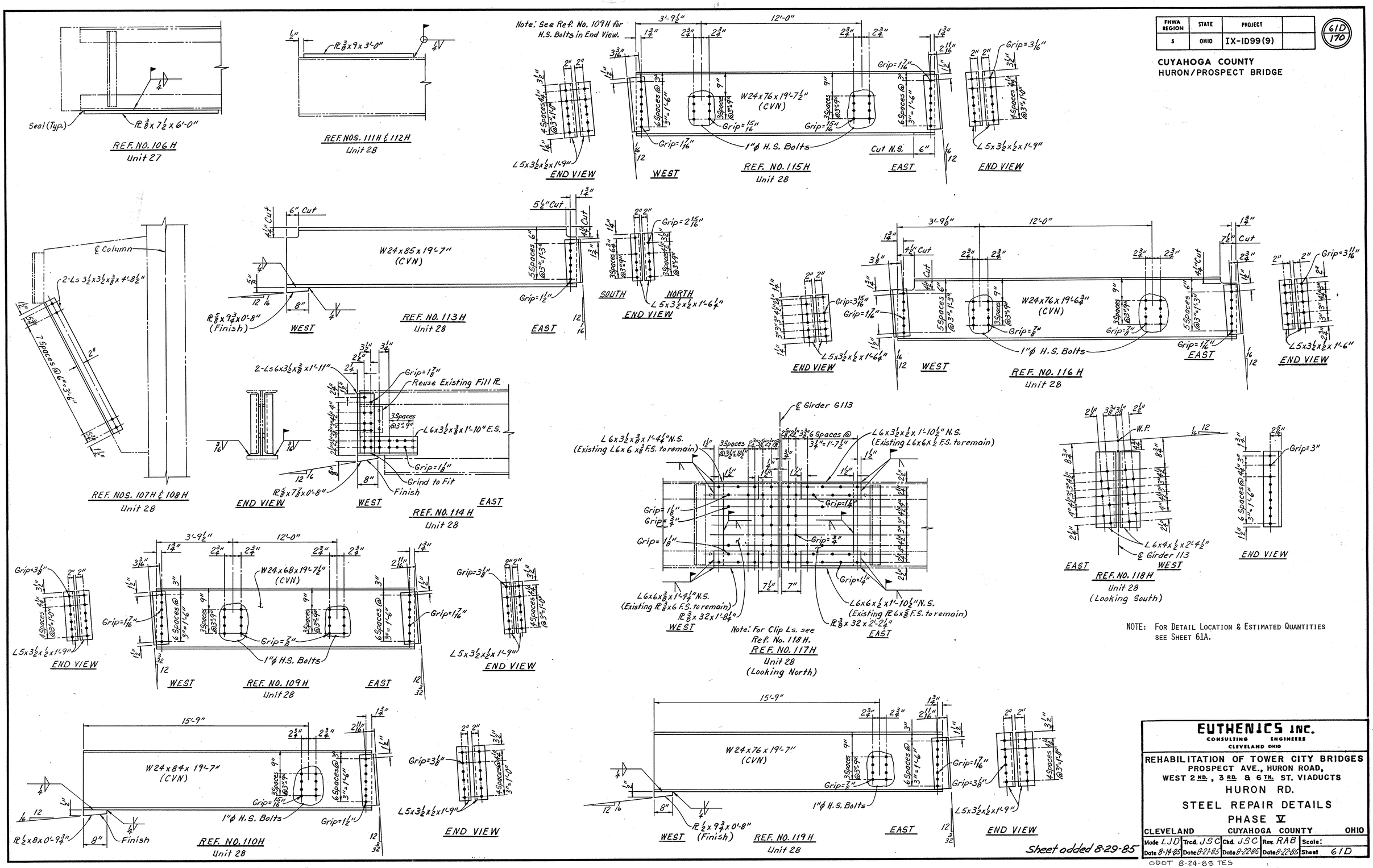

NOTE: FOR DETAIL LOCATION & ESTIMATED QUANTITIES SEE SHEET 61A.

EUTHENICS INC.
CONSULTING ENGINEERS
CLEVELAND OHIO

REHABILITATION OF TOWER CITY BRIDGES
PROSPECT AVE., HURON ROAD, WEST 2ND, 3RD & 6TH ST. VIADUCTS
HURON RD.
STEEL REPAIR DETAILS
PHASE V

CLEVELAND	CUYAHOGA COUNTY	OHIO
Made LJD Date 8-14-85	Trcd. JSC Date 8-21-85	Ckd. JSC Date 8-22-85
Rev. RAB Date 8-22-85	Scale:	Sheet 61D

Sheet added 8-29-85

ODOT 8-24-85 TES

FHWA REGION	STATE	PROJECT	
5	OHIO	M-1D99(9)	

62/170

CUYAHOGA COUNTY
HURON / PROSPECT BRIDGE

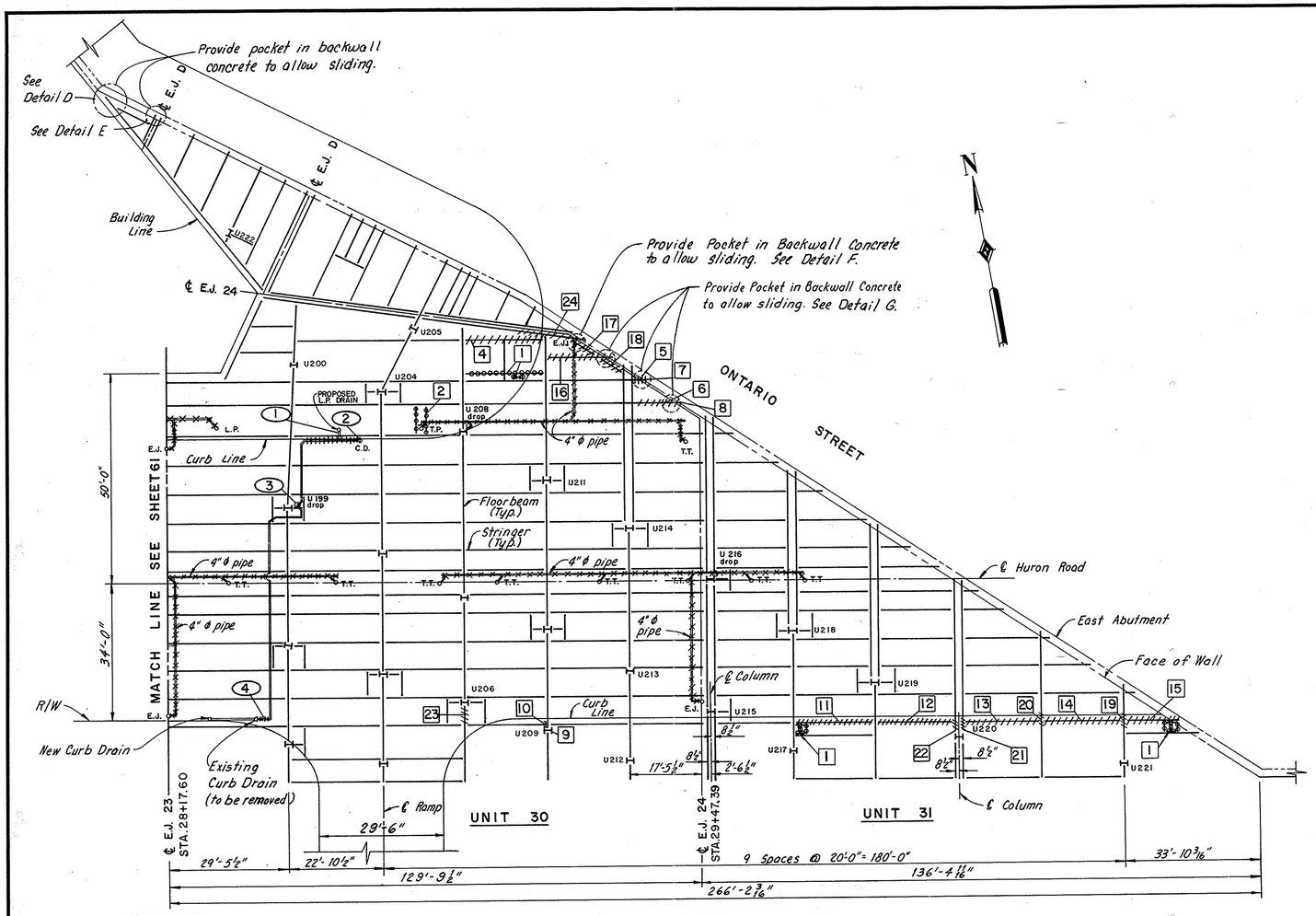

PLAN

0	ESTIMATED DRAINAGE QUANTITIES												
REF. NO.	DESCRIPTION	ITEM SPECIAL CLEAN & PAINT EXIST. PIPE (LIN. FT.)					ITEM 518 PIPE REPLACEMENT (LIN. FT.)					FOR DETAILS SEE SHEET	DROP LOCATION
		PIPE SIZE (IN.)					PIPE SIZE (IN.)						
			3	4	8	10		3	4	8	10		
1	L.P. Drain								5				
2	Curb Drain				18					20			
3	U199 Drop					26					12	97	U199
4	Curb Drain				57					16			
Totals					75	26			5	36	12		

NOTES:
1. LUMP SUM BID ITEM NO. 202, PIPE REMOVED AND DISPOSED OF, INCLUDES APPROXIMATELY 412 LIN. FT. WITHIN UNITS 30 TO 31.
2. THE LENGTHS OF PIPE SHOWN IN THE ESTIMATED DRAINAGE QUANTITIES TABLE FOR BID ITEM SPECIAL CLEAN AND PAINT EXISTING PIPE, ARE THE APPROXIMATE LENGTHS OF PIPE TO BE CLEANED AND PAINTED IN UNITS 30 TO 31. THE LENGTHS ARE APPROXIMATE ONLY AND ARE GIVEN TO ASSIST THE CONTRACTOR IN PREPARING HIS BID FOR THIS LUMP SUM ITEM.

NOTES:
1. PIPE DROPS AT COLUMNS U208 AND U216 ARE TO BE REMOVED. ALL OTHER DROPS ARE TO BE LEFT IN SERVICE.
2. FOR MISCELLANEOUS DRAINAGE DETAILS SEE SHEET 98.
3. FOR DETAILS D,E,F, AND G SEE SHEET 34.

0	ESTIMATED STEEL QUANTITIES						
REF. NO.	LOCATION (UNIT NO.)	ITEM 202 PORTIONS OF STRUCTURE REMOVED (LBS.)	ITEM 513 STRUCTURAL STEEL (LBS.)	ITEM 513 CURB PLATES (LBS.)	ITEM 513 EXP. JT. STEEL (LBS.)	ITEM 514 CLEAN & PAINT EXISTING STRUCTURAL STEEL (SQ. FT.)	FOR DETAILS SEE SHEET
	30			2,900	6480	25,505	
1	30	680	0				—
2	30	285	0				—
4	30	1,254	1,111				82
5	30	431	465				82
6	30	705	681				82
7	30	41	51				82
8	30	41	51				82
9	30	40	40				82
10	30	280	207				82
16	30	801	732				82
17	30	140	146				82
18	30	262	273				82
23	30	36	47				82
24	30	6,294	6,171				83
Sub Totals		11,290	8,975	2,900	6480	25,505	

0	ESTIMATED STEEL QUANTITIES						
REF. NO.	LOCATION (UNIT NO.)	ITEM 202 PORTIONS OF STRUCTURE REMOVED (LBS.)	ITEM 513 STRUCTURAL STEEL (LBS.)	ITEM 513 CURB PLATES (LBS.)	ITEM 513 EXP. JT. STEEL (LBS.)	ITEM 514 CLEAN & PAINT EXISTING STRUCTURAL STEEL (SQ. FT.)	FOR DETAILS SEE SHEET
	31			1,547	2846	12,920	
1	31	1,637	0				—
11	31	1,546	1,546				84
12	31	1,555	1,555				84
13	31	1,548	1,548				84
14	31	1,601	1,601				84
15	31	811	797				84
19	31	0	137				84
20	31	16	16				84
21	31	49	49				84
22	31	49	49				84
Sub Totals		8,812	7,298	1,547	2846	12,920	
Totals		20,102	17,273	4,447	9326	38,425	

Note:
The Areas Shown in Item 514 are Approximate Only and are Given to Assist the Contractor in Preparing his Bid for This Lump Sum Item.

LEGEND

- L.P. — LIGHT POST DRAIN
- T.P. — TROLLEY POLE DRAIN
- E.J. — EXPANSION JOINT DRAIN
- C.D. — CURB DRAIN
- T.T. — TROLLEY TROUGH DRAIN
- L.S.C. — LIGHT SPLICE CHAMBER
- F.H. — FIRE HYDRANT VAULT DRAIN
- PIPES TO BE REMOVED AND REPLACED
- PIPES TO BE REMOVED
- PIPES MISSING TO BE REPLACED
- STRUCTURAL STEEL TO BE REPAIRED
- STRUCTURAL STEEL TO BE REMOVED
- STRUCTURAL STEEL TO BE REPLACED
- (00) DRAINAGE REPAIRS
- [0] STRUCTURAL STEEL REPAIRS
- U00 drop — VERTICAL PIPE DROP AT COLUMN NUMBER

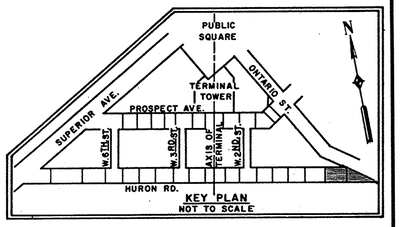

EUTHENICS INC.
CONSULTING ENGINEERS
CLEVELAND OHIO

REHABILITATION OF TOWER CITY BRIDGES
PROSPECT AVE., HURON ROAD,
WEST 2ND., 3RD. & 6TH. ST. VIADUCTS
STREET LEVEL FRAMING AND DRAINAGE
UNIT 30 AND UNIT 31
HURON ROAD

CLEVELAND CUYAHOGA COUNTY OHIO

Made REM	Trcd. REM	Chd. LJD	Rev. RAB	Scale: 1/16" = 1'-0"
Date 4-11-78	Date 4-12-78	Date 3-13-81	Date 9-4-82	Sheet 62 / 170

FHWA REGION	STATE	PROJECT	
5	OHIO	IX-ID99(9)	

62A
170

CUYAHOGA COUNTY
HURON/PROSPECT BRIDGE

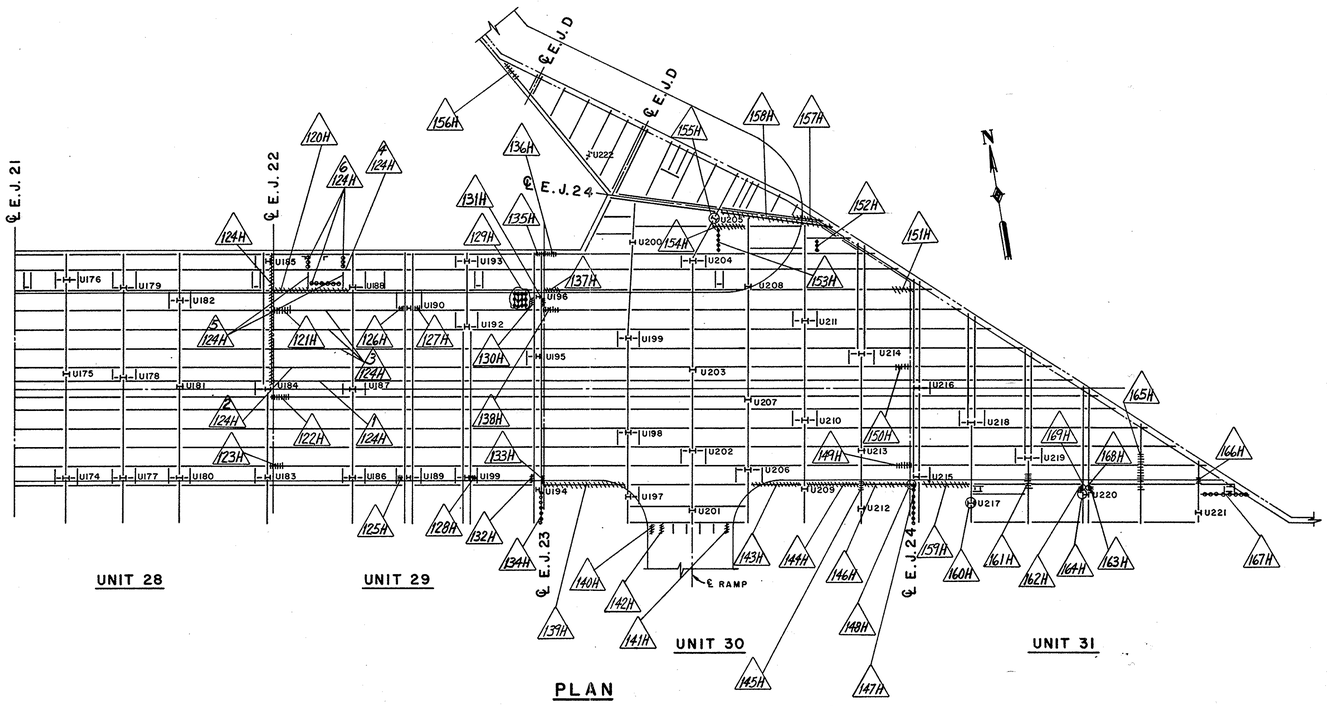

PLAN

LEGEND

- Indicates Structural Steel to be Repaired
- Indicates Structural Steel to be Replaced
- Indicates Structural Steel to be Removed and Not Replaced
- U00 Indicates Column Numbers

ESTIMATED STEEL QUANTITIES

REF. NO.	LOCATION (UNIT NO.)	ITEM 202 PORTIONS OF STRUCTURE REMOVED (LBS.)	ITEM 513 STRUCTURAL STEEL (LBS.)	ITEM 513 CURB PLATES (LBS.)	ITEM 513 EXP.JT. STEEL (LBS.)	ITEM 202 CONCRETE PORTION OF SUPERSTRUCTURE REMOVED (Cu.Yds.)	FOR DETAILS SEE SHEET
120H	29	5,522	5,187				62C
121H	29	—	36				62C
122H	29	—	24				62C
123H	29	244	188				62C
124H	29	17,842	12,454			5	62F
124H-1	29	3,978	Reuse			3	62F
124H-2	29	3,969	Reuse			3	62F
124H-3	29	11,048	Reuse	3 Beams		10	62F
124H-4	29	3,423	Reuse			3	62F
124H-5	29	430	Reuse	2 Channels		14	62F
124H-6	29	604	—	3 Channels			
125H	29	99	100				62C
126H	29	99	100				62C
127H	29	99	100				62C
128H	29	587	547				62C
129H	29	351	—				
130H	29	95	91				62C
131H	29	95	91				62C
132H	29	112	121				62C
133H	29	112	121				62C
134H	29	3,236	—				
135H	29	100	83				62C
136H	30	29	30				62C
137H	30	1,262	1,557				62C
138H	30	—	27				62C
139H	30	5,929	6,097				62C
140H	30	92	92				62D
141H	30	92	92				62D
142H	30	85	85				62D
143H	30	1,704	1,638				62D

ESTIMATED STEEL QUANTITIES

REF. NO.	LOCATION (UNIT NO.)	ITEM 202 PORTIONS OF STRUCTURE REMOVED (LBS.)	ITEM 513 STRUCTURAL STEEL (LBS.)	ITEM 513 CURB PLATES (LBS.)	ITEM 513 EXP.JT. STEEL (LBS.)	ITEM 202 CONCRETE PORTION OF SUPERSTRUCTURE REMOVED (Cu.Yds.)	FOR DETAILS SEE SHEET
144H	30	1,617	1,633				62D
145H	30	—	47				62D
146H	30	1,732	1,607				62D
147H	30	2,766	—				
148H	30	136	358				62D
149H	30	—	36				62D
150H	30	—	33				62D
151H	30	585	822				62D
152H	30	120	—				
153H	30	180	—				
154H	30	652	538				62D
155H	30	12	11				62D
156H	30	—	118				62D
157H	30	1,976	1,669				62D
158H	30	16,771	12,337				62E
159H	31	1,566	1,586				62E
160H	31	37	38				62E
161H	31	—	143				62E
162H	31	54	55				62E
163H	31	54	55				62E
164H	31	74	76				62E
165H	31	1,279	1,348				62E
166H	31	—	62				62E
167H	31	1,376	—				
168H	31	—	49				62E
169H	31	—	49				62E
Totals		92,225	51,531			38	

NOTES:

1.) For Details see Sheets 62C thru 62F.
2.) The Following Abbreviations are used:
N.S.= Near Side E.S.= Each Side
F.S.= Far Side W.P.= Working Point
(Typ.)= Typical (T & B)= Top & Bottom
H.S. Bolts= High Strength Bolts

EUTHENICS INC.
CONSULTING ENGINEERS
CLEVELAND OHIO

REHABILITATION OF TOWER CITY BRIDGES
PROSPECT AVE., HURON ROAD,
WEST 2ND., 3RD. & 6TH. ST. VIADUCTS
STREET LEVEL FRAMING PLAN & ESTIMATED STEEL QUANTITIES
UNITS 28 THRU 31
HURON RD. PHASE VI

CLEVELAND CUYAHOGA COUNTY OHIO

Made JSC	Trcd. JSC	Ckd. LJD	Rev. RAB	Scale:
Date 10-2-85	Date 10-3-85	Date 10-3-85	Date 10-3-85	Sheet 62A

ODOT 10-4-85 TES

Sheet added 10-11-85

FHWA REGION	STATE	PROJECT	
5	OHIO	IX-ID99(9)	

62B
170

CUYAHOGA COUNTY
HURON/PROSPECT BRIDGE

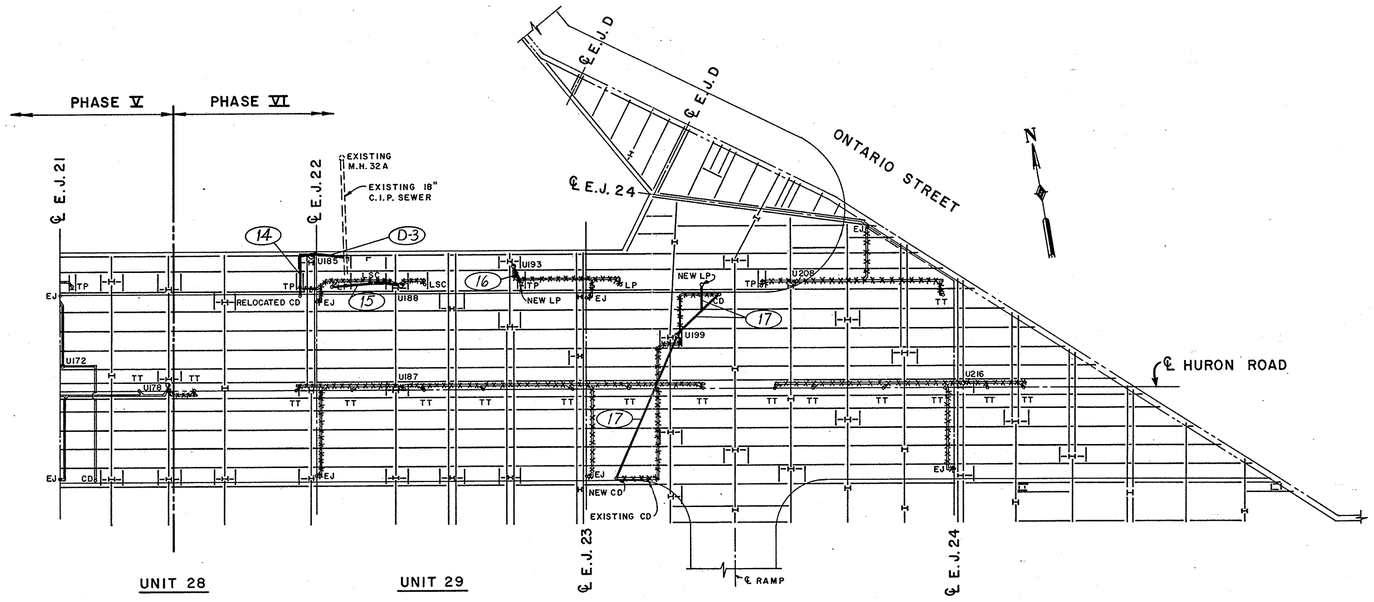

PLAN

LEGEND

U	Indicates Drop Pipe Locations
LP	Indicates Light Pole Drain
TP	Indicates Trolley Pole Drain
EJ	Indicates Expansion Joint Drain
CD	Indicates Curb Drain
FH	Indicates Fire Hydrant Vault Drain
TT	Indicates Trolley Trough Drain
LSC	Indicates Light Splice Chamber
OBT	Indicates Ohio Bell Telephone Drain
———	Indicates New Pipe
//////	Indicates Pipes to be removed & replaced
XXXX	Indicates Pipes to be removed
------	Indicates Pipes missing to be replaced

NOTES:
1) For Drops at Columns U185 and U188 see Sheet 97S.
2) For Drops at Columns U193 and U199 see Sheet 97A.
3) Dimensions to be verified by the Contractor.

0 ESTIMATED DRAINAGE QUANTITIES

REF. NO.	DESCRIPTION	ITEM SPECIAL CLEAN & PAINT EXIST. PIPE (LIN. FT.) PIPE SIZE (IN.)					ITEM 518 PIPE REPLACEMENT (LIN. FT.) PIPE SIZE (IN.)					ITEM 603 CONDUIT TYPE B (LIN. FT.) PIPE SIZE (IN.)				FOR DETAILS SEE SHEET	DROP LOCATION
			3	4	8			3	4	8	4" P.V.C.		8				
14	Curb Drain & Drop									54						97S	U185
D-3													14			97S	U185
15	Light Pole Drain										27					97S	U188
15	Light Splice Chamber																
	Drain & Drop										35					97S	U188
16	Light Pole Drain & Drop										39					97A	U193
17	Curb Drain & Drop									112						97A	U199
17	Light Pole Drain										12					97A	U199
TOTALS										166	113		14				

Sheet added 1-3-86

EUTHENICS INC.
CONSULTING ENGINEERS
CLEVELAND OHIO

REHABILITATION OF TOWER CITY BRIDGES
PROSPECT AVE., HURON ROAD,
WEST 2ND., 3RD. & 6TH. ST. VIADUCTS
DRAINAGE DETAILS &
ESTIMATED DRAINAGE QUANTITIES
UNITS 28 THRU 31
HURON RD. PHASE VI
CLEVELAND CUYAHOGA COUNTY OHIO

Made JSC	Trcd. JSC	Ckd. LJD	Rev. RAB	Scale:
Date 12-1-85	Date 12-1-85	Date 12-13-85	Date 12-13-85	Sheet 62B

ODOT 12-24-85 TES

FHWA REGION	STATE	PROJECT	
5	OHIO	IX-ID99(9)	

62C

CUYAHOGA COUNTY
HURON/PROSPECT BRIDGE

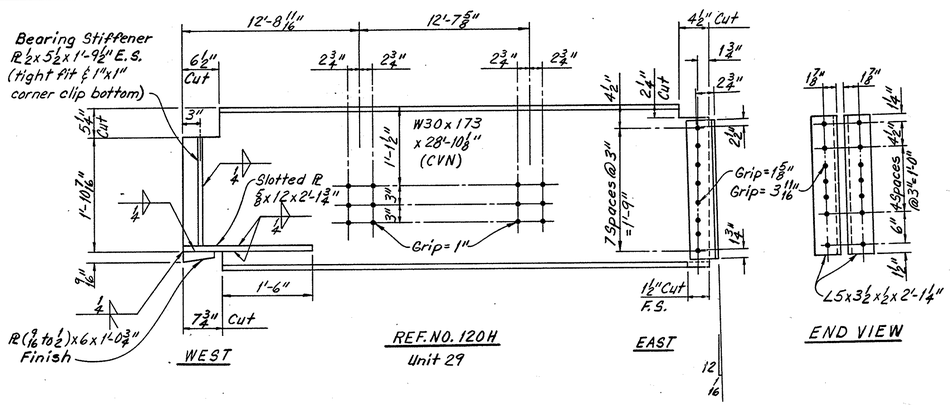

REF. NO. 120H
Unit 29

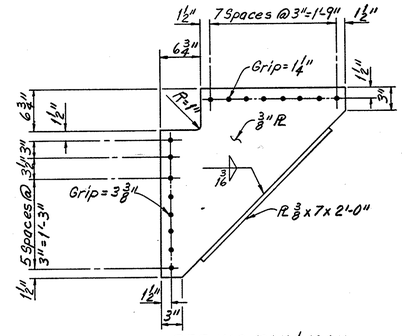

REF. NOS. 130H & 131H
Unit 29

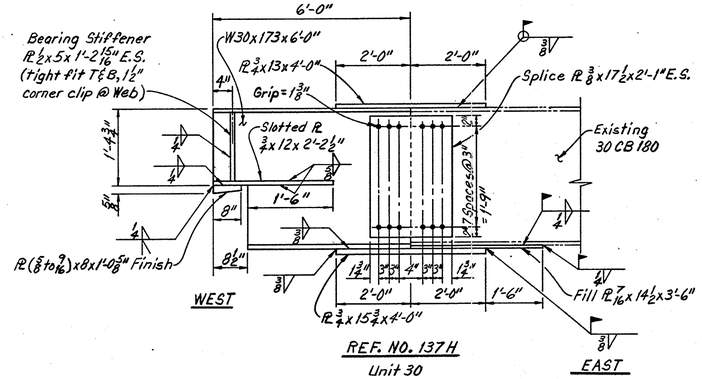

REF. NO. 137H
Unit 30

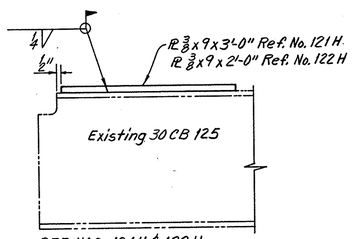

REF. NOS. 121H & 122H
Unit 29

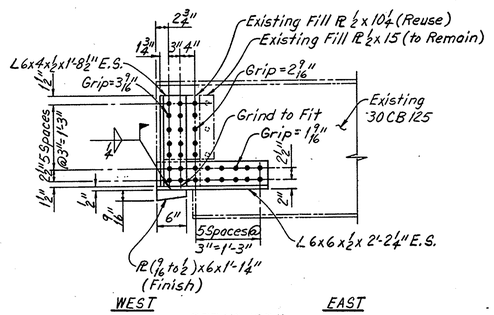

REF. NO. 123H
Unit 29

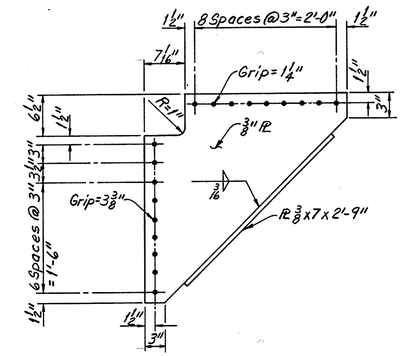

REF. NOS. 132H & 133H
Unit 29

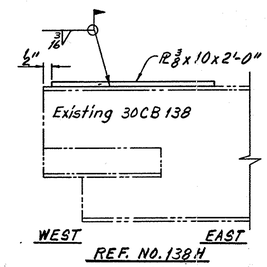

REF. NO. 138H
Unit 30

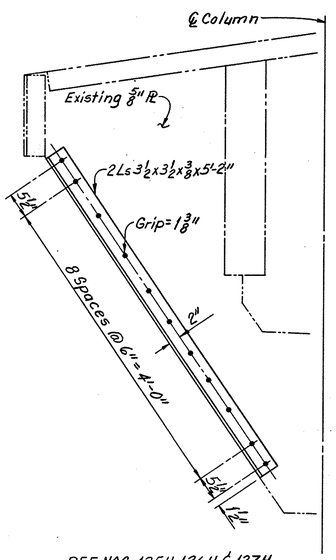

REF. NOS. 125H, 126H & 127H
Unit 29

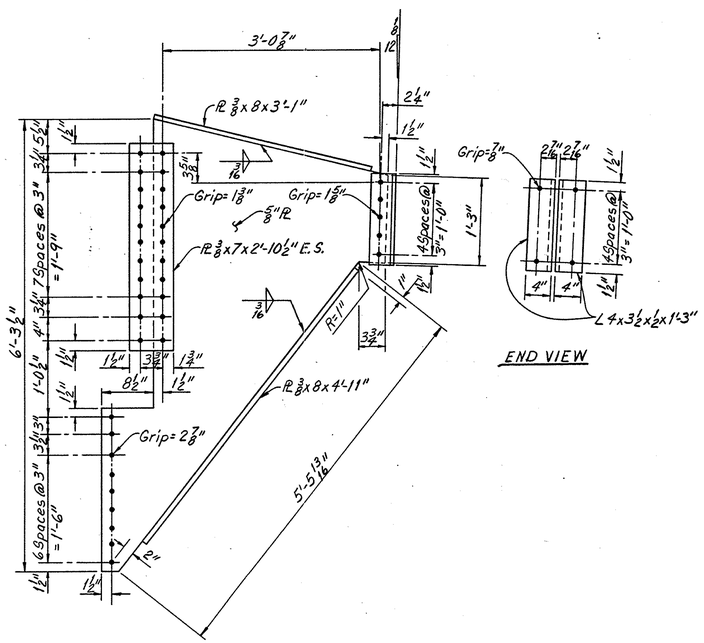

REF. NO. 128H
Unit 29

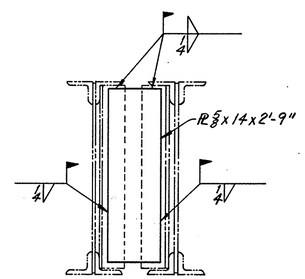

REF. NO. 135H
Unit 29

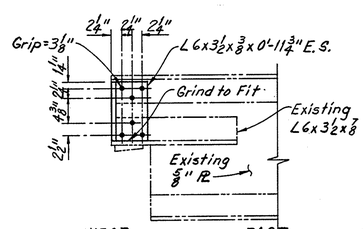

REF. NO. 136H
Unit 30

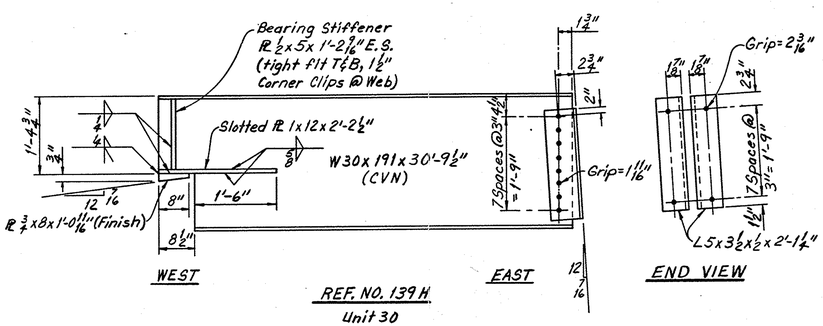

REF. NO. 139H
Unit 30

NOTE:
For Detail Location, Estimated Quantities and Notes see Sheet 62A.

EUTHENICS INC.
CONSULTING ENGINEERS
CLEVELAND OHIO

REHABILITATION OF TOWER CITY BRIDGES
PROSPECT AVE., HURON ROAD,
WEST 2ND., 3RD. & 6TH. ST. VIADUCTS

HURON RD.
STEEL REPAIR DETAILS
PHASE VI

CLEVELAND CUYAHOGA COUNTY OHIO

Mode LJD	Trcd. JSC	Ckd. JSC	Rev. RAB	Scale:
Date 8-26-85	Date 8-28-85	Date 8-28-85	Date 8-28-85	Sheet 62C

Sheet added 9-5-85

ODOT 8-30-85 TES

FHWA REGION	STATE	PROJECT	
5	OHIO	IX-ID99(9)	

62D
170

CUYAHOGA COUNTY
HURON/PROSPECT BRIDGE

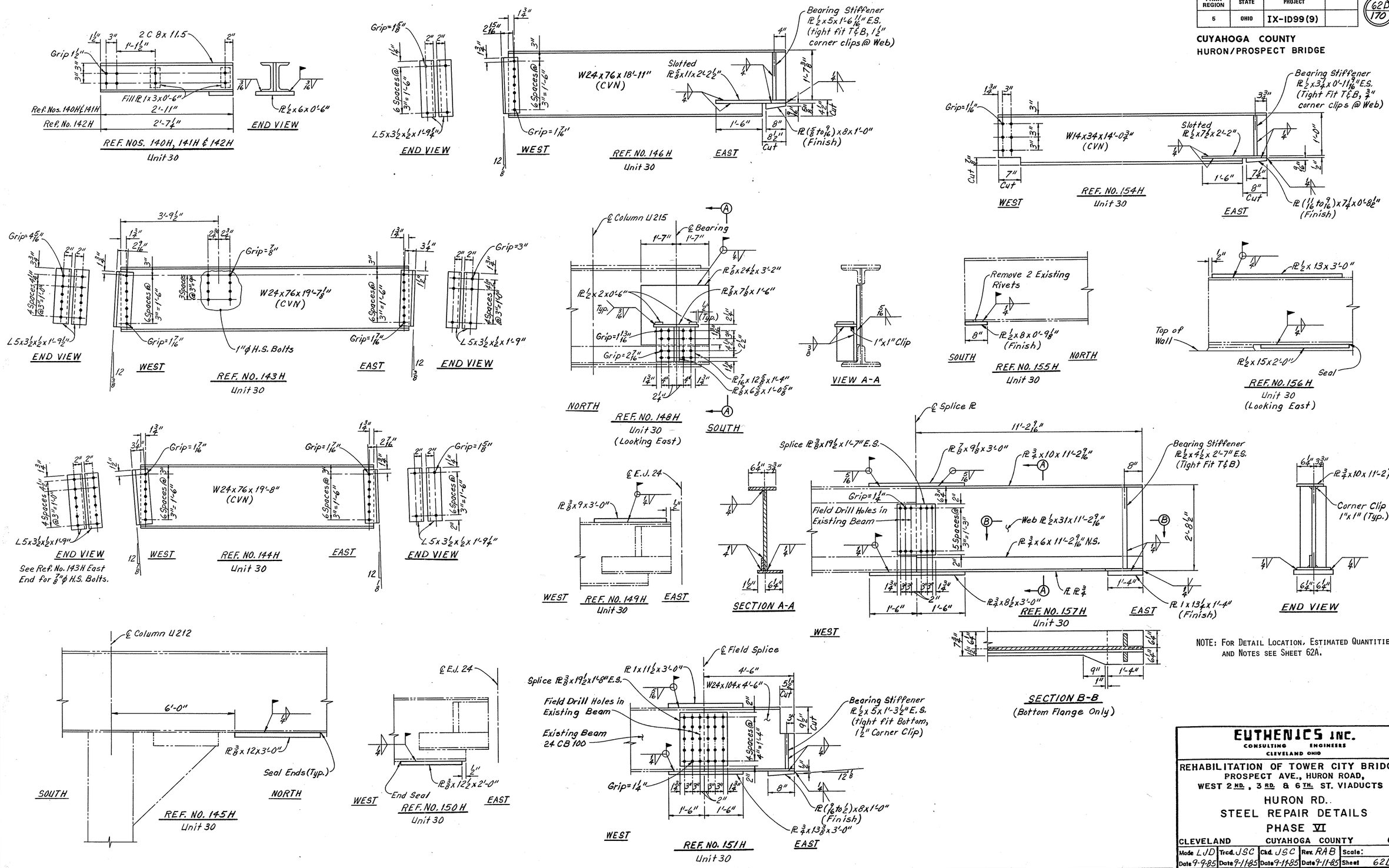

NOTE: FOR DETAIL LOCATION, ESTIMATED QUANTITIES AND NOTES SEE SHEET 62A.

EUTHENICS INC.
CONSULTING ENGINEERS
CLEVELAND OHIO

REHABILITATION OF TOWER CITY BRIDGES
PROSPECT AVE., HURON ROAD,
WEST 2ND., 3RD. & 6TH. ST. VIADUCTS
HURON RD.
STEEL REPAIR DETAILS
PHASE VI

CLEVELAND CUYAHOGA COUNTY OHIO

Made LJD	Trcd. JSC	Ckd. JSC	Rev. RAB	Scale:
Date 9-9-85	Date 9-11-85	Date 9-11-85	Date 9-11-85	Sheet 62D

ODOT 9-13-85 TES

Sheet added 9-20-85

FHWA REGION	STATE	PROJECT	
5	OHIO	IX-ID99(9)	

62E
170

CUYAHOGA COUNTY
HURON/PROSPECT BRIDGE

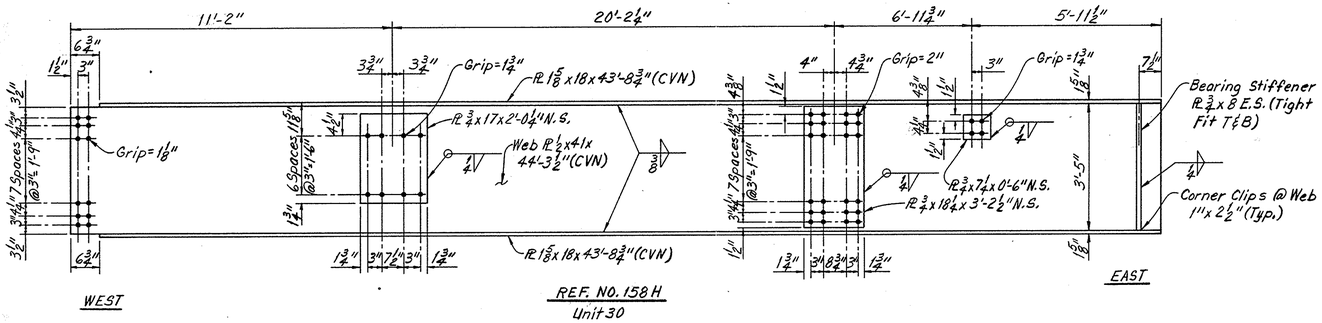

REF. NO. 158 H
Unit 30

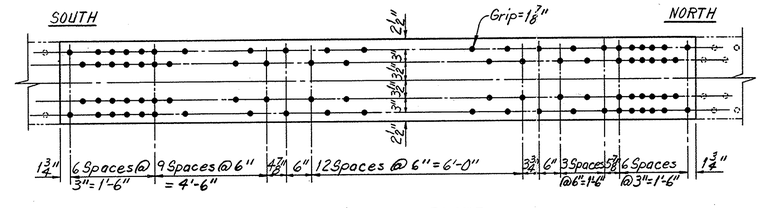

TOP & BOTTOM PLATE

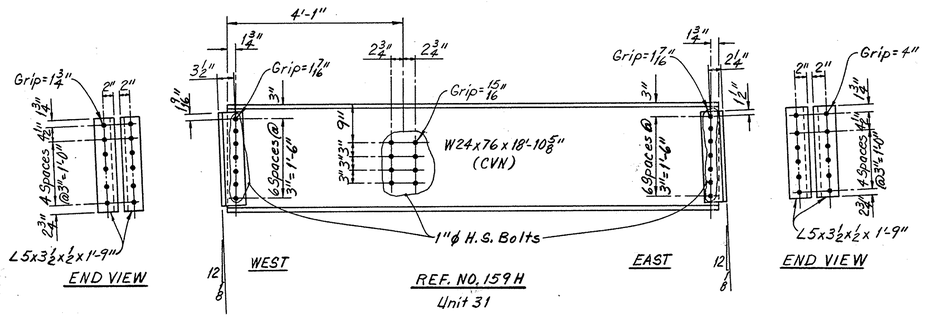

REF. NO. 159 H
Unit 31

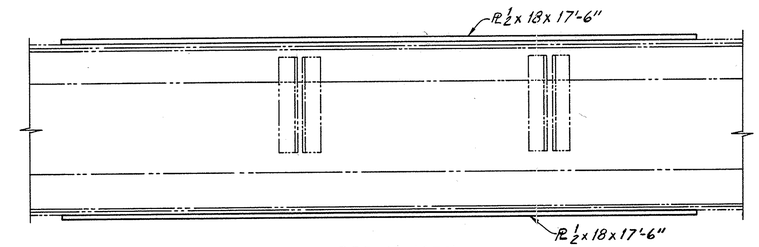

REF. NO. 165 H
Unit 31

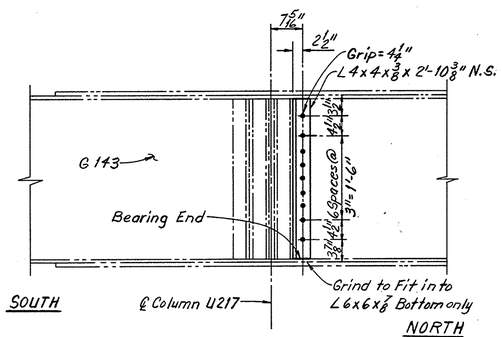

REF. NO. 160 H
Unit 31

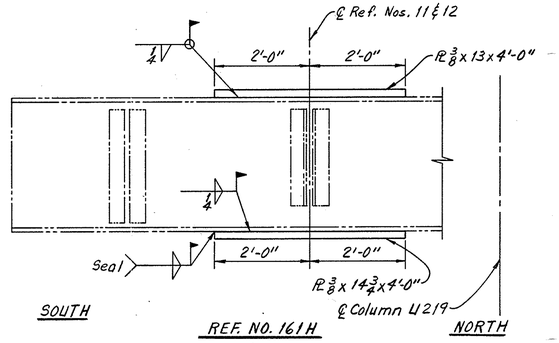

REF. NO. 161 H
Unit 31

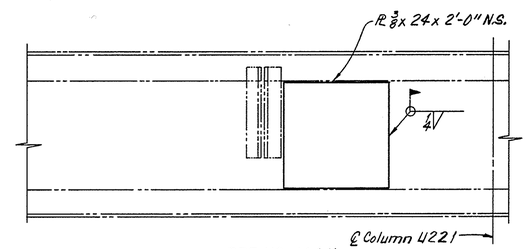

REF. NO. 166 H
Unit 31
(Looking East)

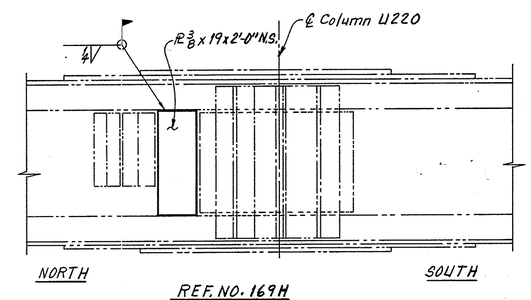

REF. NO. 169 H
Unit 31
(Looking East)

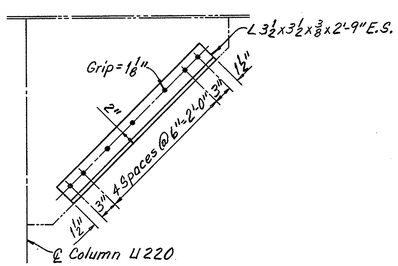

REF. NOS. 162 H & 163 H
Unit 31
(Looking West)

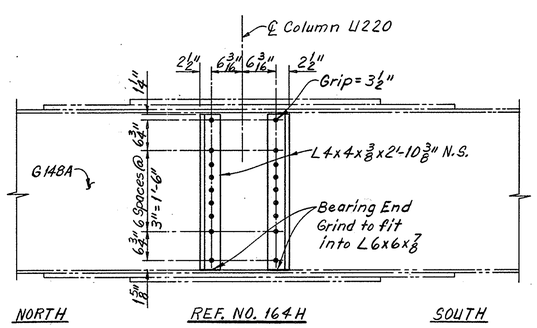

REF. NO. 164 H
Unit 31
(Looking East)

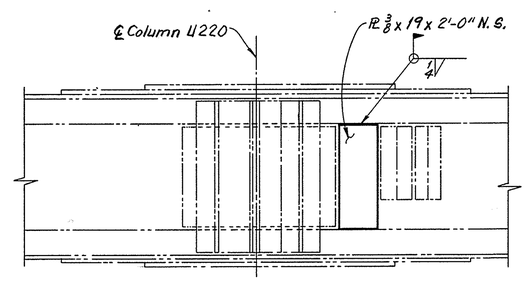

REF. NO. 168 H
Unit 31
(Looking West)

NOTE:
For Detail Location, Estimated Quantities and Notes see Sheet 62A.

EUTHENICS INC.
CONSULTING ENGINEERS
CLEVELAND OHIO

REHABILITATION OF TOWER CITY BRIDGES
PROSPECT AVE., HURON ROAD,
WEST 2ND., 3RD. & 6TH. ST. VIADUCTS
HURON RD.
STEEL REPAIR DETAILS
PHASE VI

CLEVELAND		CUYAHOGA COUNTY		OHIO
Mode LJD	Trcd. JSC	Ckd. JSC	Rev. RAB	Scale:
Date 9-13-85	Date 9-16-85	Date 9-16-85	Date 9-17-85	Sheet 62E

ODOT 9-24-85 TES

Sheet added 10-11-85

FHWA REGION	STATE	PROJECT	
5	OHIO	IX-ID99(9)	

62F
170

CUYAHOGA COUNTY
HURON/PROSPECT BRIDGE

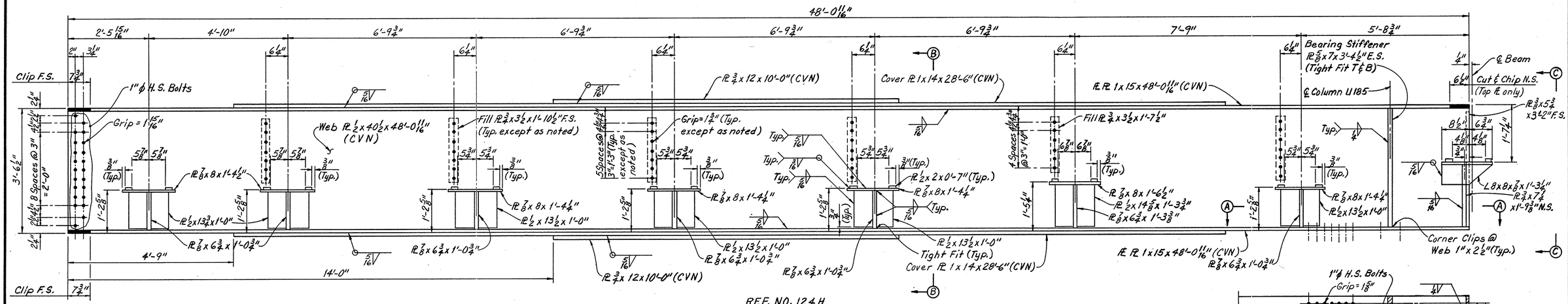

REF. NO. 124H
Unit 29

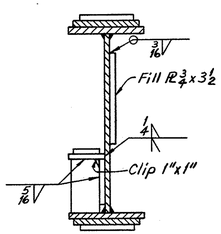

SECTION B-B

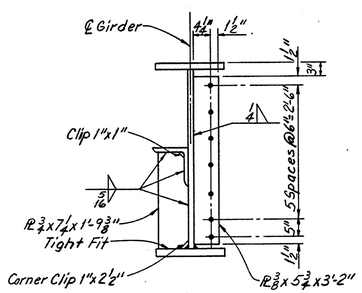

VIEW C-C

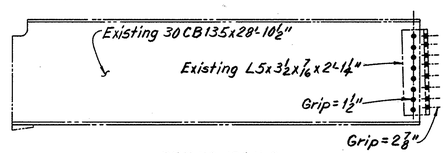

REF. NO. 124H-2
Unit 29

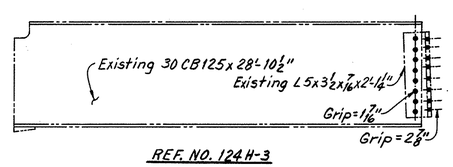

REF. NO. 124H-3
(Typ. for 3 Beams)
Unit 29

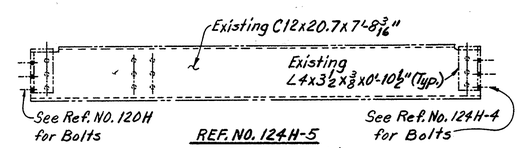

REF. NO. 124H-5
(Typ. for 2 Channels)
Unit 29

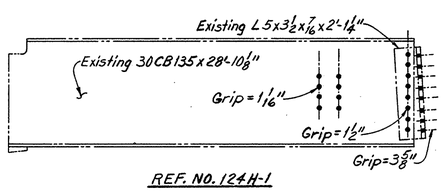

REF. NO. 124H-1
Unit 29

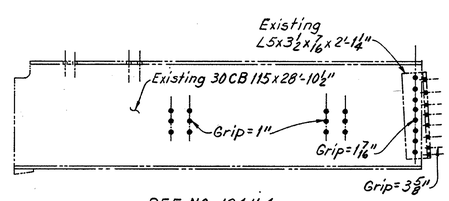

REF. NO. 124H-4
Unit 29

NOTES:

1. REMOVE REF. NOS. 124H-1 THRU 124H-5 FOR ERECTION OF REF. NO. 124H THEN REPLACE.
2. ANGLES AND RIVETS SHOWN TO BE REMOVED AND REPLACED WITH 7/8" Ø HIGH STRENGTH BOLTS.
3. ALL BEAMS REMOVED AND REPLACED MUST HAVE FIREPROOFING CONCRETE REMOVED, SAND BLASTED AND PAINTED.
4. SAND BLAST AND PAINT EAST SIDE OF GIRDER AND ALL EXPOSED STEEL TO INCLUDE COLUMNS BEFORE ERECTION OF EAST GIRDER.
5. REUSE EXISTING DIAPHRAGMS BETWEEN EAST AND WEST GIRDER. PAINT WEST SIDE OF NEW GIRDER PRIOR TO ERECTION.
6. THE 12" Ø SANITARY SEWER MUST BE SUPPORTED DURING REPAIR OF REF. NO. 124H.

NOTE:
FOR DETAIL LOCATION, ESTIMATED QUANTITIES AND NOTES SEE SHEET 62A.

EUTHENICS INC.
CONSULTING ENGINEERS
CLEVELAND OHIO

REHABILITATION OF TOWER CITY BRIDGES
PROSPECT AVE., HURON ROAD,
WEST 2ND., 3RD. & 6TH. ST. VIADUCTS

HURON RD.
STEEL REPAIR DETAILS
PHASE VI

CLEVELAND CUYAHOGA COUNTY OHIO

Made LJD	Trcd. JSC	Ckd. JSC	Rev. RAB	Scale:
Date 9-30-85	Date 10-2-85	Date 10-2-85	Date 10-2-85	Sheet 62F

ODOT 10-4-85 TES Sheet added 10-11-85

FHWA REGION	STATE	PROJECT	
5	OHIO	M-ID 99(9)	

CUYAHOGA COUNTY
HURON / PROSPECT BRIDGE

Note:
The Areas Shown in Item 514 are Approximate Only and are Given to Assist the Contractor in Preparing his Bid for This Lump Sum Item.

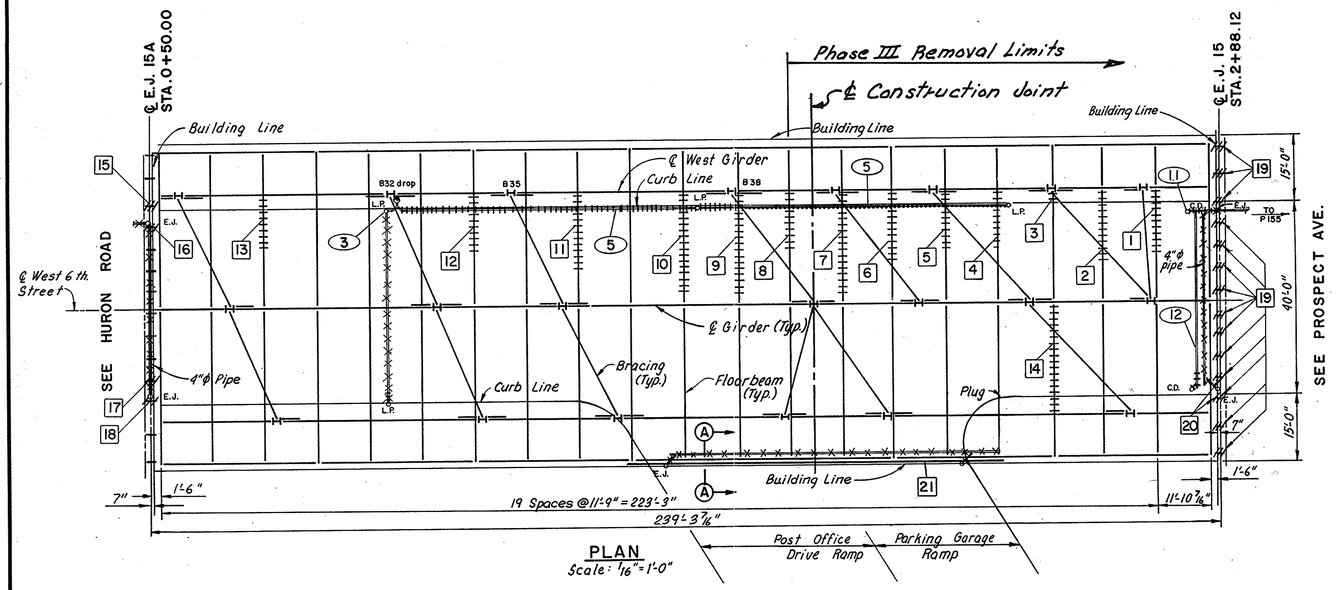

PLAN
Scale: 1/16" = 1'-0"

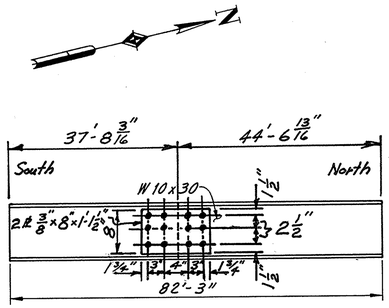

REF. NO. 21

REF. NO.	DIMENSION "A"
1	14'-6"
2	16'-6"
3	3'-0"
4	12'-6"
5	12'-6"
6	16'-6"
7	22'-0"
8	12'-6"
9	21'-5"
10	21'-5"
11	16'-6"
12	13'-6"
13	12'-6"
14	22'-5"

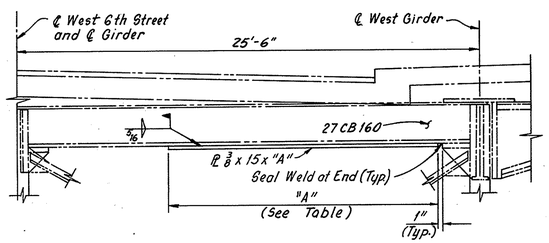

REF. NOS. 1, 2 & 3
(Looking South)

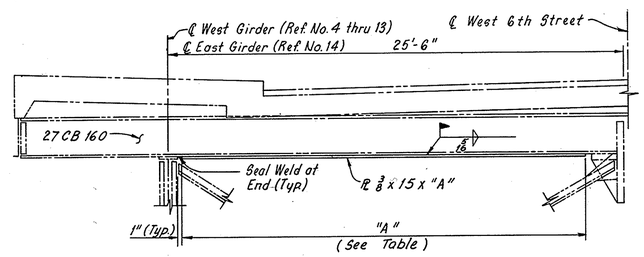

REF. NO. 4 THRU 13 (Looking North)
REF. NO. 14 (Looking South)

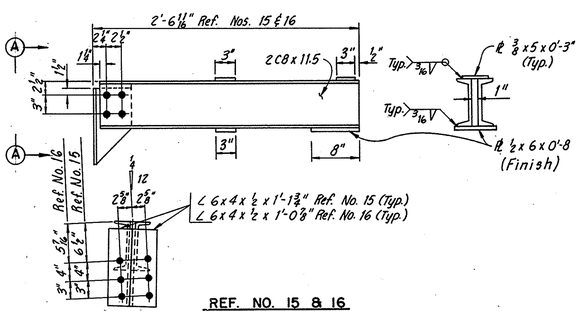

VIEW A-A
REF. NO. 15 & 16
(Looking West)

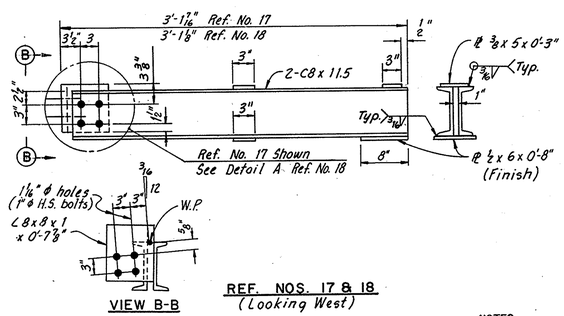

VIEW B-B
REF. NOS. 17 & 18
(Looking West)

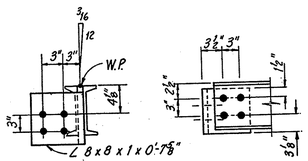

DETAIL A - REF. NO. 18

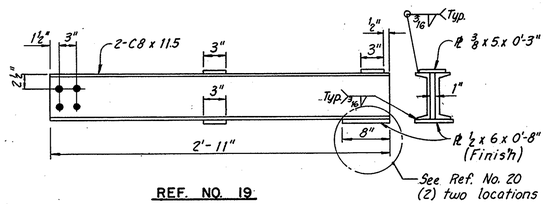

REF. NO. 19

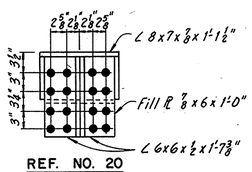

REF. NO. 20

0	ESTIMATED STEEL QUANTITIES						
REF. NO.	LOCATION (UNIT NO.)	ITEM 202 PORTIONS OF STRUCTURE REMOVED (LBS.)	ITEM 513 STRUCTURAL STEEL (LBS.)	ITEM 513 CURB PLATES (LBS.)	ITEM 513 EXP. JT. STEEL (LBS.)	ITEM 514 CLEAN & PAINT EXISTING STRUCTURAL STEEL (SQ. FT.)	FOR DETAILS SEE SHEET
	PARKING GARAGE RAMP				4,159		
	W. 6th. St.			5,360		27,350	
1-14		0	4,236				
15		119	119				
16		116	116				
17		124	124				
18		120	120				
19		1,135	1,135				
20		276	276				
21	W. 6th. St.	0	(2,854) 2903				
Totals		1,890	(8,980) 9,037	5,360	4,159	27,350	

0	ESTIMATED DRAINAGE QUANTITIES										
REF. NO.	DESCRIPTION	ITEM SPECIAL CLEAN & PAINT EXIST. PIPE (LIN. FT.) PIPE SIZE (IN.) 3	4	8		ITEM 518 PIPE REPLACEMENT (LIN. FT.) PIPE SIZE (IN.) 3	4	8		FOR DETAILS SEE SHEET	DROP LOCATION
11	Curb Drain							10			
12	Curb Drain			40				13			P155
3	B 32 drop		26							95	B 32
5	L.P. drain						170				
Totals			26	40			170	23			

NOTES:
1. Lump Sum Bid Item No. 202., Pipe Removed and Disposed of, includes approximately 200 Lin. Ft. within West 6th. St. limits.
2. The lengths of pipe shown in the Estimated Drainage Quantities Table for Bid Item Special Clean and Paint Existing Pipe are the approximate lengths of pipe to be cleaned and painted in West 6th. Street. The lengths are approximate only and are given to assist the Contractor in preparing his bid for this lump sum item.
3. For Section A-A see Sheet 50.

NOTES:
1. Material shown Phantom (——— - - - - - - - - - - - -) in Steel Repair Details is existing and to remain in place. All other is to be removed and replaced as shown.
2. Dimensions shown for Structural Steel Repairs and Replacement to existing members are from the original plans. The Contractor shall be responsible for making his own measurement, before fabricating, to insure the various parts of the work fit together with the completed structure.
3. ● Denotes 7/8" Ø High Strength Bolts except as noted.

LEGEND

- L.P.— Light Post Drain
- T.P.— Trolley Pole Drain
- E.J.— Expansion Joint Drain
- C.D.— Curb Drain
- T.T.— Trolley Trough Drain
- L.S.C.— Light Splice Chamber
- F.H.— Fire Hydrant Vault Drain
- Pipes to be Removed and Replaced
- Pipes to be Removed
- Pipes Missing to be Replaced
- Structural Steel to be Repaired
- Structural Steel to be Replaced
- (00) Drainage Repairs
- [0] Structural Steel Repairs
- B00 drop — Vertical Pipe Drop at Column Number

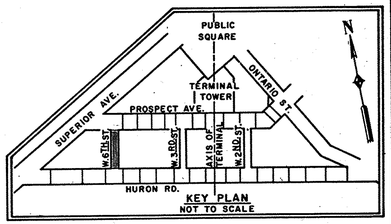

KEY PLAN
NOT TO SCALE

EUTHENICS INC.
CONSULTING ENGINEERS
CLEVELAND OHIO

REHABILITATION OF TOWER CITY BRIDGES
PROSPECT AVE., HURON ROAD, WEST 2ND., 3RD. & 6TH. ST. VIADUCTS

STREET LEVEL FRAMING AND DRAINAGE

WEST 6TH. ST.

CLEVELAND — CUYAHOGA COUNTY — OHIO

Mode LRH	Trcd. JSC	Chd. LJD	Rev. RAB	Scale: As Noted
Date 4-23-78	Date 4-24-78	Date 3-13-81	Date 9-6-82	Sheet 63 / 170

Revised 1-11-85

FHWA REGION	STATE	PROJECT	
5	OHIO	M-ID 99(9)	

64
170

CUYAHOGA COUNTY
HURON / PROSPECT BRIDGE

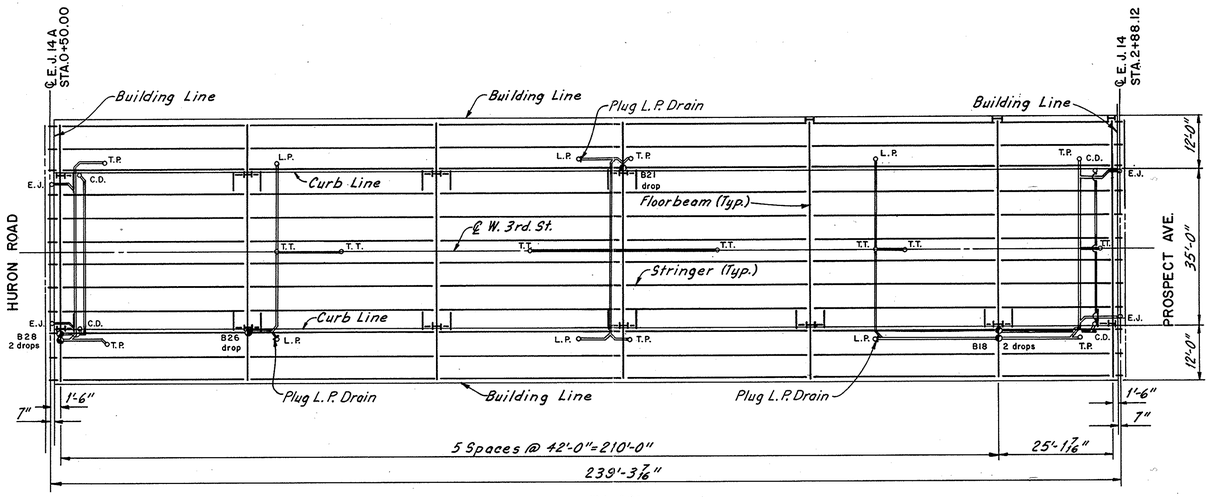

PLAN

NOTES:
1. ALL PIPE DROPS ARE TO BE LEFT IN SERVICE.
2. FOR MISCELLANEOUS DRAINAGE DETAILS SEE SHEET 98.

O	ESTIMATED STEEL QUANTITIES						
REF. NO.	LOCATION (UNIT NO.)	ITEM 202 PORTIONS OF STRUCTURE REMOVED (LBS.)	ITEM 513 STRUCTURAL STEEL (LBS.)	ITEM 513 CURB PLATES (LBS.)	ITEM 513 EXP. JT. STEEL (LBS.)	ITEM 514 CLEAN & PAINT EXISTING STRUCTURAL STEEL (SQ. FT.)	FOR DETAILS SEE SHEET
	W. 3rd. St.			5,406		699	
Totals				5,406		699	

Note:
The Areas Shown in Item 514 are Approximate Only and are Given to Assist the Contractor in Preparing his Bid for This Lump Sum Item.

LEGEND

L.P.— LIGHT POST DRAIN
T.P.— TROLLEY POLE DRAIN
E.J.— EXPANSION JOINT DRAIN
C.D.— CURB DRAIN
T.T.— TROLLEY TROUGH DRAIN
L.S.C.— LIGHT SPLICE CHAMBER
F.H.— FIRE HYDRANT VAULT DRAIN
O — STRUCTURAL STEEL REPAIRS
B00 drop — VERTICAL PIPE DROP AT COLUMN NUMBER

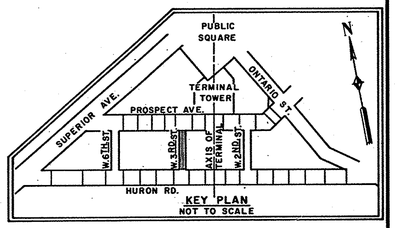

KEY PLAN
NOT TO SCALE

EUTHENICS INC.
CONSULTING ENGINEERS
CLEVELAND OHIO

REHABILITATION OF TOWER CITY BRIDGES
PROSPECT AVE., HURON ROAD,
WEST 2ND., 3RD. & 6TH. ST. VIADUCTS

STREET LEVEL FRAMING AND DRAINAGE

WEST 3RD. ST.

CLEVELAND CUYAHOGA COUNTY OHIO

Made KRD	Trcd. JSC	Ckd. LJD	Rev. RAB	Scale: 1/16" = 1'-0"
Date 4-24-78	Date 4-25-78	Date 3-16-81	Date 9-6-82	Sheet 64 / 170

FHWA REGION	STATE	PROJECT	
5	OHIO	M-ID 99 (9)	

65 / 170

CUYAHOGA COUNTY
HURON / PROSPECT BRIDGE

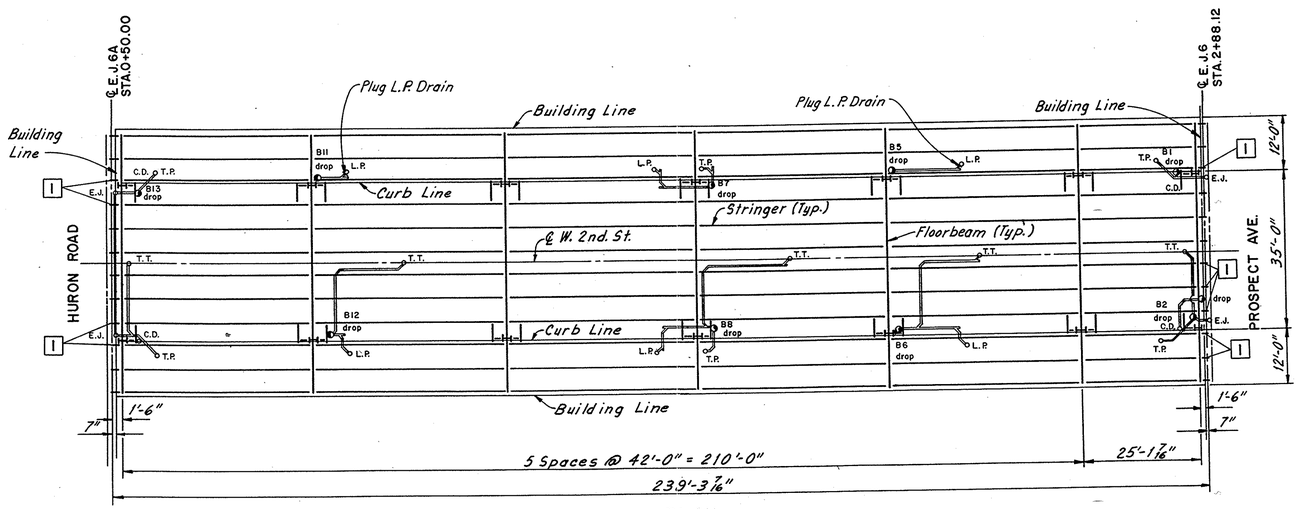

PLAN

0	ESTIMATED STEEL QUANTITIES						
REF. NO.	LOCATION (UNIT NO.)	ITEM 202 PORTIONS OF STRUCTURE REMOVED (LBS.)	ITEM 513 STRUCTURAL STEEL (LBS.)	ITEM 513 CURB PLATES (LBS.)	ITEM 513 EXP. JT. STEEL (LBS.)	ITEM 514 CLEAN & PAINT EXISTING STRUCTURAL STEEL (SQ. FT.)	FOR DETAILS SEE SHEET
1							
		379	334			2,577	
		568	500			2,577	
	W. 2nd. St.			5,406			
Totals		947	834	5,406		5,154	

Note:
The Areas Shown in Item 514 are Approximate Only and are Given to Assist the Contractor in Preparing his Bid for This Lump Sum Item.

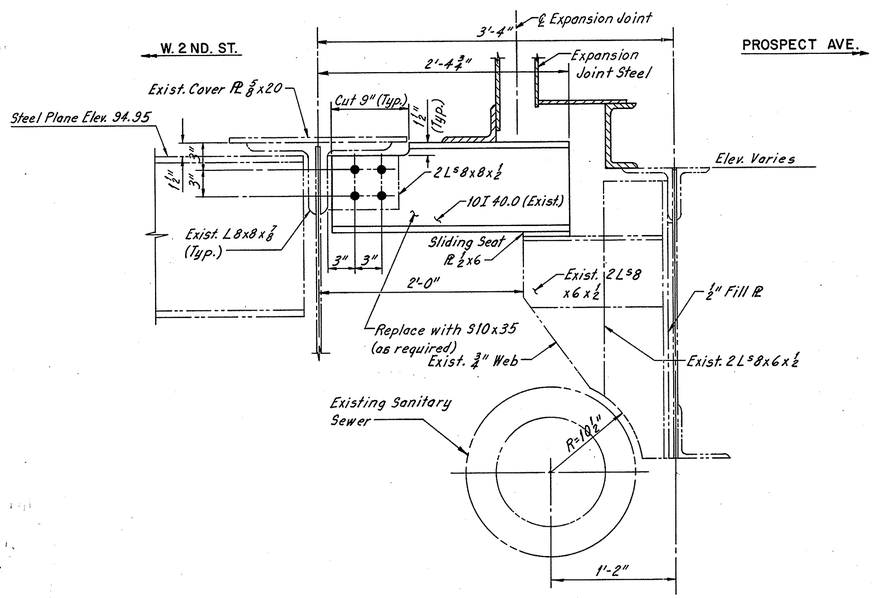

REF. NO. 1
TYPICAL SLIDING SUPPORT FOR ARMOR PLATE AND ANGLES
(W. 2nd. St. & Prospect Ave.)
(W. 2nd. St. & Huron Rd. similar)
Scale: 1 1/2" = 1'-0"

NOTE: THIS DETAIL IS TO BE USED FOR BID PURPOSES ONLY. THE ACTUAL REPLACEMENT OF ALL CORRODED ELEMENTS SHALL BE DIRECTED BY THE ENGINEER DURING CONSTRUCTION. THE CONTRACTOR SHALL FURNISH SHOP DRAWINGS FOR ALL REPLACED MEMBERS FOR APPROVAL BY THE ENGINEER.

NOTES:
1. MATERIAL SHOWN PHANTON (—— - - —— - - ——) IN STEEL REPAIR DETAILS IS EXISTING AND TO REMAIN IN PLACE. ALL OTHER IS TO BE REMOVED AND REPLACED AS SHOWN.
2. DIMENSIONS SHOWN FOR STRUCTURAL STEEL REPAIRS AND REPLACEMENT TO EXISTING MEMBERS ARE FROM THE ORIGINAL PLANS. THE CONTRACTOR SHALL BE RESPONSIBLE FOR MAKING HIS OWN MEASUREMENT, BEFORE FABRICATING, TO INSURE THE VARIOUS PARTS OF THE WORK FIT TOGETHER WITH THE COMPLETED STRUCTURE.
3. ● DENOTES 7/8" Ø HIGH STRENGTH BOLTS EXCEPT AS NOTED.

LEGEND

L.P.— LIGHT POST DRAIN
T.P.— TROLLEY POLE DRAIN
E.J.— EXPANSION JOINT DRAIN
C.D.— CURB DRAIN
T.T.— TROLLEY TROUGH DRAIN
L.S.C.— LIGHT SPLICE CHAMBER
F.H.— FIRE HYDRANT VAULT DRAIN
[0] STRUCTURAL STEEL REPAIRS
B00 drop ◐ VERTICAL PIPE DROP AT COLUMN NUMBER

NOTES:
1. ALL PIPE DROPS ARE TO BE LEFT IN SERVICE.
2. FOR MISCELLANEOUS DRAINAGE DETAILS SEE SHEET 98.

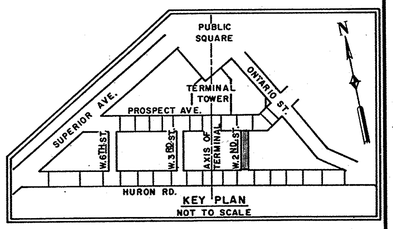

KEY PLAN
NOT TO SCALE

EUTHENICS INC.
CONSULTING ENGINEERS
CLEVELAND OHIO

REHABILITATION OF TOWER CITY BRIDGES
PROSPECT AVE., HURON ROAD,
WEST 2 ND., 3 RD. & 6 TH. ST. VIADUCTS

STREET LEVEL FRAMING AND DRAINAGE

WEST 2 ND. ST.

CLEVELAND CUYAHOGA COUNTY OHIO

Made KRD	Trcd. JSC	Ckd. LJD	Rev. RAB	Scale: 1/16" = 1'-0"
Date 4-22-78	Date 4-23-78	Date 3-17-81	Date 9-6-82	Sheet 65 / 170

FHWA REGION	STATE	PROJECT	
5	OHIO	M-ID 99 (9)	

66 / 170

CUYAHOGA COUNTY
HURON / PROSPECT BRIDGE

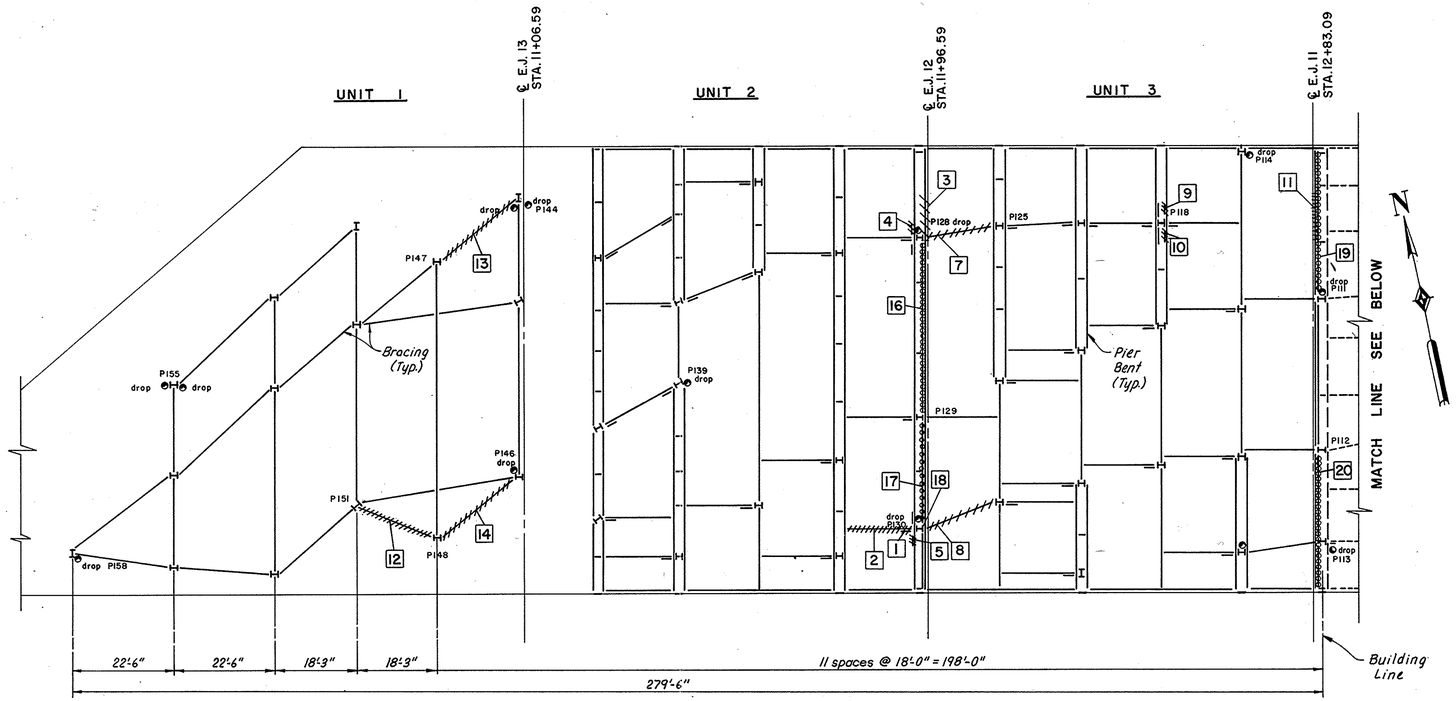

PLAN

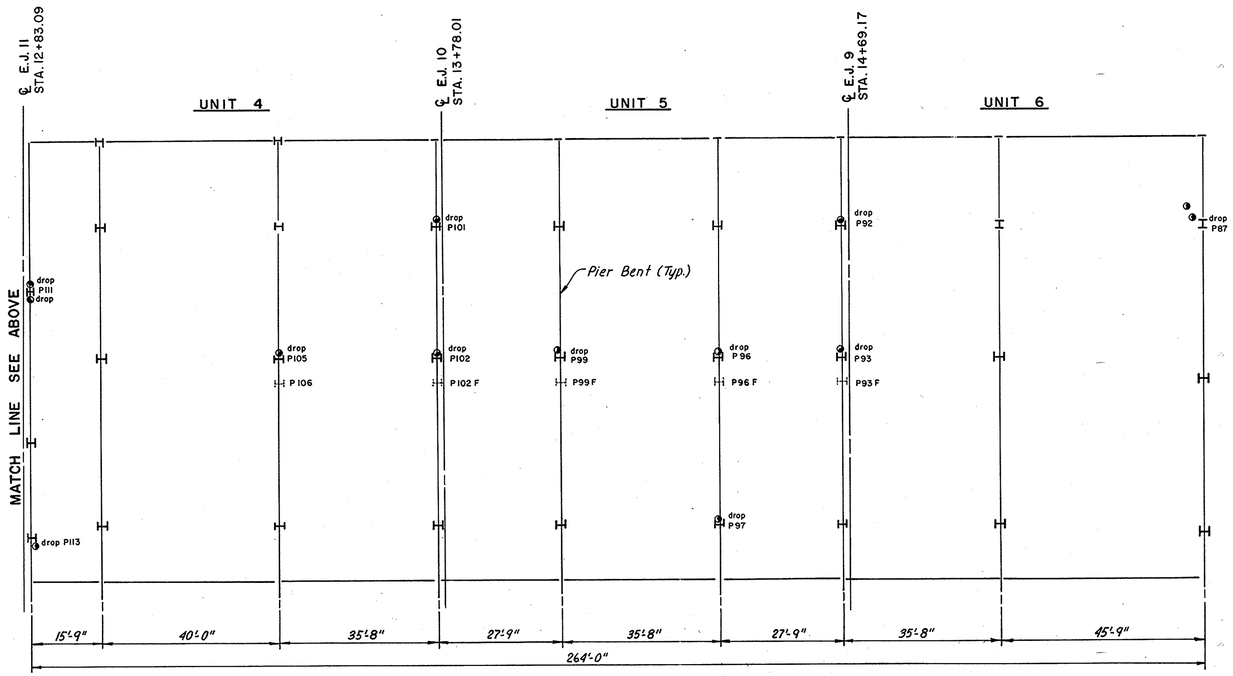

PARKING GARAGE FLOOR

0 ESTIMATED STEEL QUANTITIES

REF. NO.	LOCATION (UNIT NO.)	ITEM 202 PORTIONS OF STRUCTURE REMOVED (LBS.)	ITEM 513 STRUCTURAL STEEL (LBS.)	ITEM 513 CURB PLATES (LBS.)	ITEM 513 EXP. JT. STEEL (LBS.)	ITEM 514 CLEAN & PAINT EXISTING STRUCTURAL STEEL (SQ.FT.)	FOR DETAILS SEE SHEET
12	1	561	561				85
13	1	596	596				85
14	1	897	897				85
Sub Totals		2,054	2,054				
1	2	268	268				85
2	2	688	688				85
3	2	0	124				85
4	2	106	106				85
5	2	114	114				85
16	2	854	0				—
17	2	511	0				—
18	2	196	639				85
Sub Totals		2,737	1,939				
7	3	1,147	1,147				86
8	3	1,236	1,236				86
9	3	123	123				86
10	3	123	123				86
11	3	0	379				86
19	3	714	0				—
20	3	691	0				—
Sub Totals		4,034	3,008				
Totals		8,825	7,001				

Note:
The Areas Shown in Item 514 are Approximate Only and are Given to Assist the Contractor in Preparing his Bid for This Lump Sum Item.

LEGEND

- Structural Steel to be Repaired
- Structural Steel to be Removed
- Structural Steel to be Replaced
- Drainage Repairs
- Structural Steel Repairs
- P00 drop — Vertical Pipe Drop at Column Number

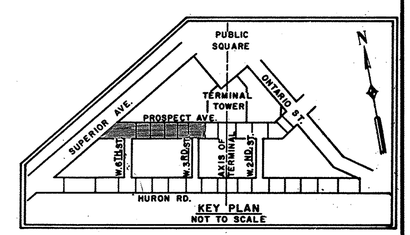

EUTHENICS INC.
CONSULTING ENGINEERS
CLEVELAND OHIO

REHABILITATION OF TOWER CITY BRIDGES
PROSPECT AVE., HURON ROAD,
WEST 2ND., 3RD. & 6TH. ST. VIADUCTS
72.5 LEVEL FRAMING PLAN

UNIT 1 TO UNIT 6
PROSPECT AVE.

CLEVELAND CUYAHOGA COUNTY OHIO

Made KRD	Trcd. REM	Ckd. LJD	Rev. RAB	Scale: 1/16" = 1'-0"
Date 4-17-78	Date 4-18-78	Date 3-19-81	Date 9-6-82	Sheet 66 / 170

FHWA REGION	STATE	PROJECT	
5	OHIO	IX-ID99(9)	

66A

CUYAHOGA COUNTY
HURON/PROSPECT BRIDGE

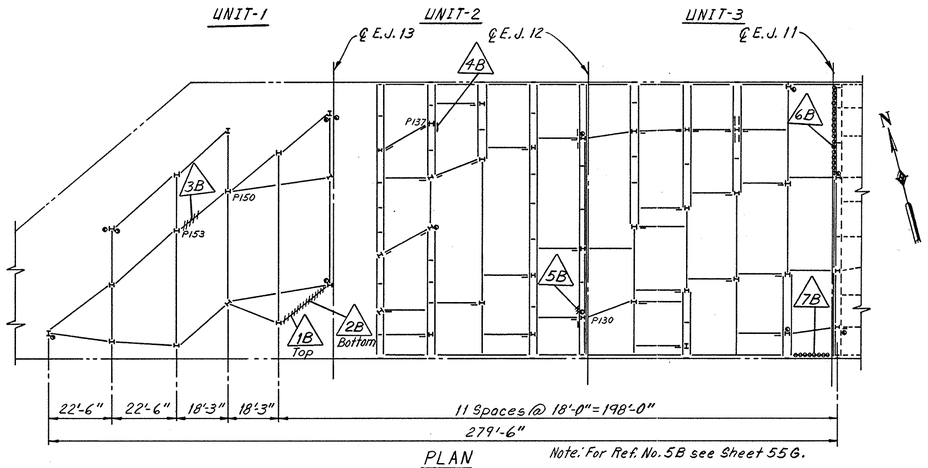

PLAN

Note: For Ref. No. 5B see Sheet 55G.

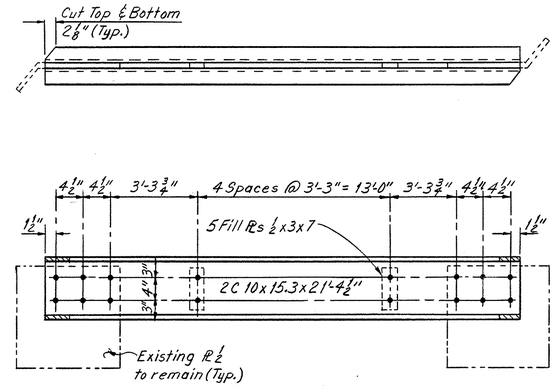

REF. NO. 1B
(Unit 1-72.5 Level)
(Looking Northwest)

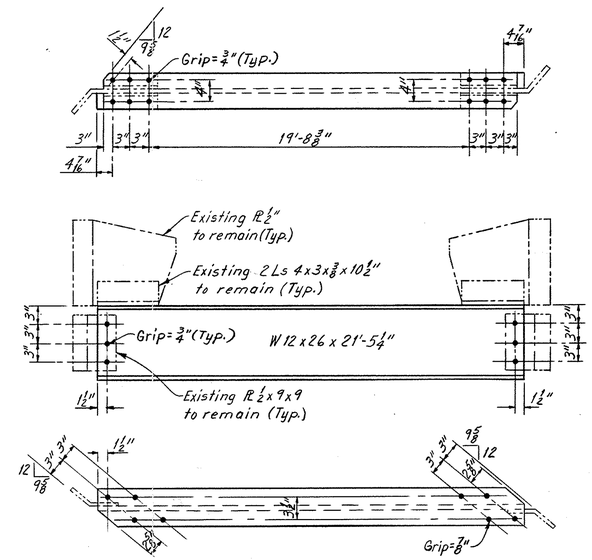

REF. NO. 2B
(Unit 1-72.5 Level)
(Looking Northwest)

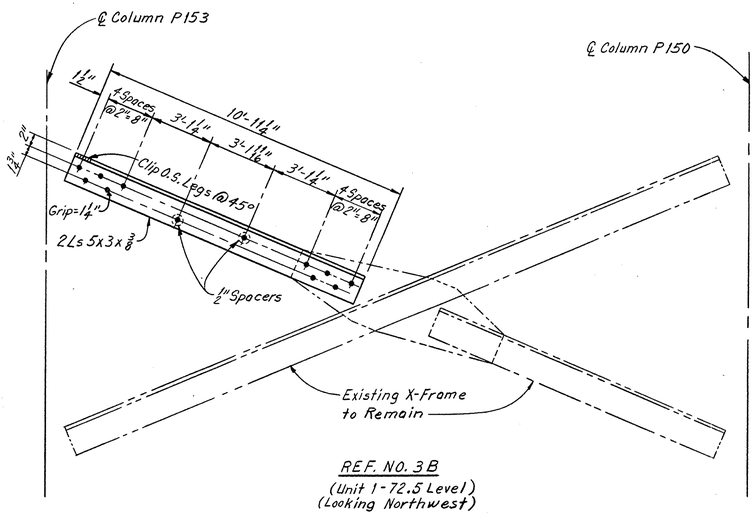

REF. NO. 3B
(Unit 1-72.5 Level)
(Looking Northwest)

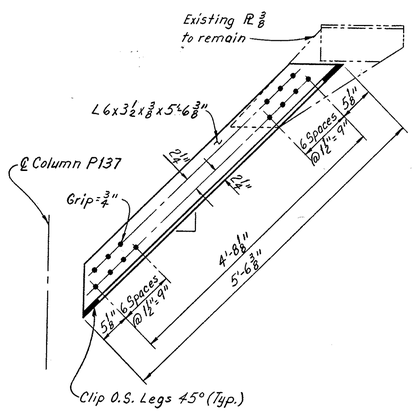

REF. NO. 4B
(Unit 2-72.5 Level)
(Looking East)

ESTIMATED STEEL QUANTITIES

REF. NO.	LOCATION (UNIT NO.)	ITEM 202 PORTIONS OF STRUCTURE REMOVED (LBS.)	ITEM 513 STRUCTURAL STEEL (LBS.)	ITEM 513 CURB PLATES (LBS.)	ITEM 513 EXP. JT. STEEL (LBS.)	ITEM SPECIAL CLEAN & PAINT EXISTING STRUCTURAL STEEL (SQ.FT.)	FOR DETAILS SEE SHEET
1B	1-72.5 Level	691	693				
2B	1-72.5 Level	562	586				
3B	1-72.5 Level	228	229				
4B	2-72.5 Level	79	80				
5B	2-72.5 Level	147	123				55G
6B	3-72.5 Level	3,224	—				
7B	3-72.5 Level	403	—				
Total		5,334	1,711				

Sheet added 1-11-85

EUTHENICS INC.
CONSULTING ENGINEERS
CLEVELAND OHIO

REHABILITATION OF TOWER CITY BRIDGES
PROSPECT AVE., HURON ROAD,
WEST 2 ND., 3 RD. & 6 TH. ST. VIADUCTS
PROSPECT AVE.
STEEL REPAIR DETAILS
PHASE III
72.5 LEVEL

CLEVELAND CUYAHOGA COUNTY OHIO

Mode JSC	Trcd. JSC	Ckd. LJD	Rev. RAB	Scale:
Date 11-26-84	Date 11-27-84	Date 12-3-84	Date 12-4-84	Sheet 66A

ODOT 12-6-84 TES

FHWA REGION	STATE	PROJECT	
5	OHIO	M-ID 99 (9)	

67 / 170

CUYAHOGA COUNTY
HURON/ PROSPECT BRIDGE

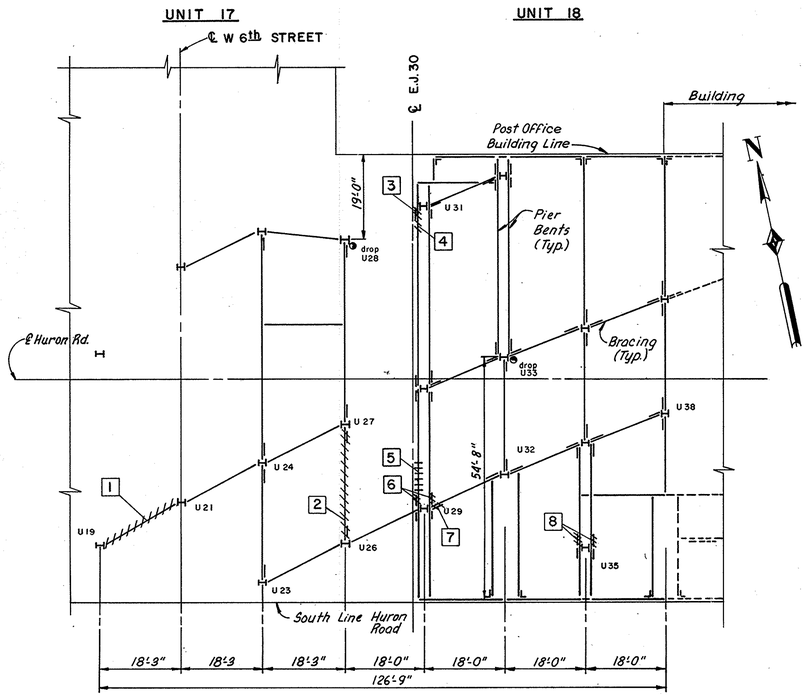

PLAN

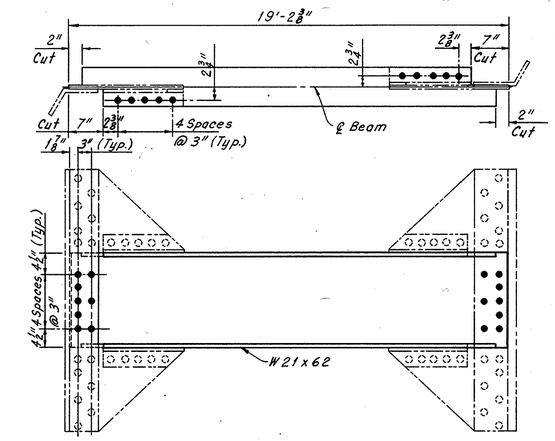

REF. NO. 1
(Unit 17-72.5 Level)

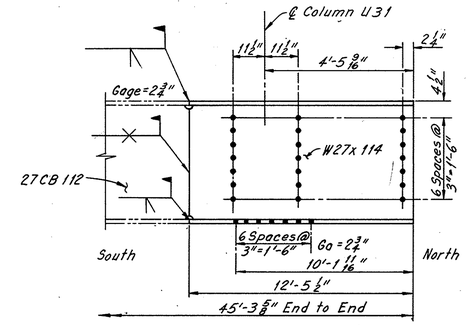

REF. NO. 4
(Unit 18-72.5 Level)

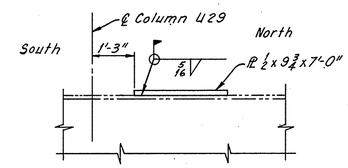

REF. NO. 5
(Unit 18-72.5 Level)

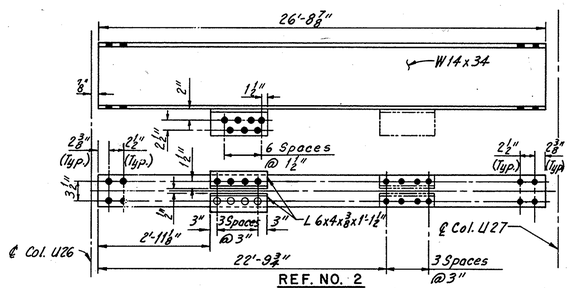

REF. NO. 2
(Unit 17-72.5 Level)

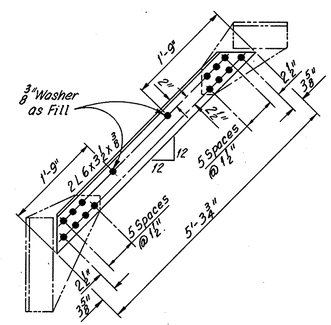

REF. NO. 7
(Unit 18-72.5 Level)

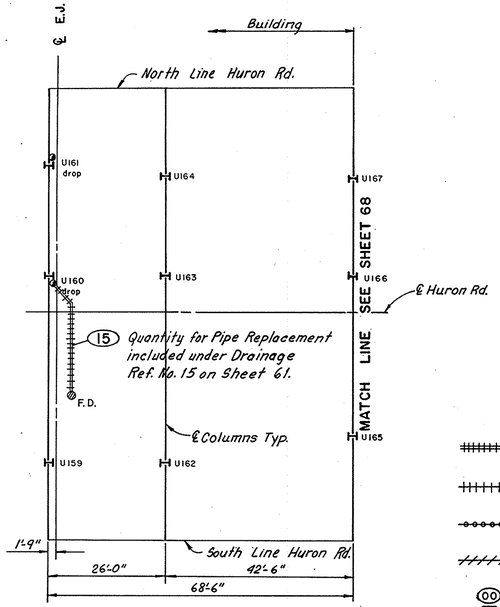

UNIT 27
PARKING GARAGE FLOOR

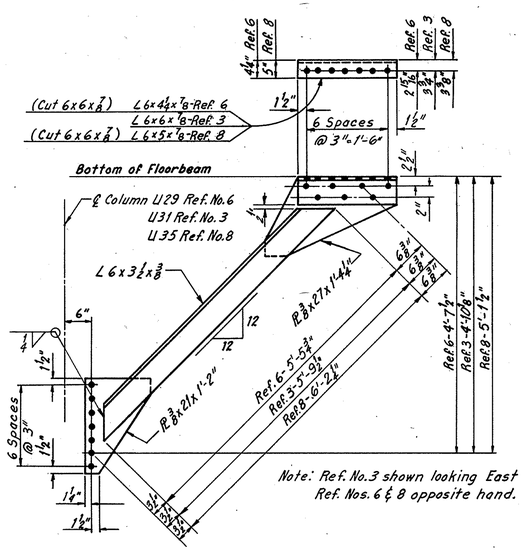

REF. NOS. 3, 6 & 8
(Unit 18-72.5 Level)

NOTES:

1. MATERIAL SHOWN PHANTOM (————————) IN STEEL REPAIR DETAILS IS EXISTING AND TO REMAIN IN PLACE. ALL OTHER IS TO BE REMOVED AND REPLACED AS SHOWN.
2. DIMENSIONS SHOWN FOR STRUCTURAL STEEL REPAIRS AND REPLACEMENT TO EXISTING MEMBERS ARE FROM THE ORIGINAL PLANS. THE CONTRACTOR SHALL BE RESPONSIBLE FOR MAKING HIS OWN MEASUREMENT, BEFORE FABRICATING, TO INSURE THE VARIOUS PARTS OF THE WORK FIT TOGETHER WITH THE COMPLETED STRUCTURE.
3. ● DENOTES 7/8" Ø HIGH STRENGTH BOLTS EXCEPT AS NOTED.

Note:
The Areas Shown in Item 514 are Approximate Only and are Given to Assist the Contractor in Preparing his Bid for This Lump Sum Item.

LEGEND

- PIPES TO BE REMOVED AND REPLACED
- STRUCTURAL STEEL TO BE REPAIRED
- STRUCTURAL STEEL TO BE REMOVED
- STRUCTURAL STEEL TO BE REPLACED
- DRAINAGE REPAIRS
- STRUCTURAL STEEL REPAIRS
- U00 drop — VERTICAL PIPE DROP AT COLUMN NUMBER
- F.D. — BUILDING FLOOR DRAIN

ESTIMATED STEEL QUANTITIES

REF. NO.	LOCATION (UNIT NO.)	ITEM 202 PORTIONS OF STRUCTURE REMOVED (LBS.)	ITEM 513 STRUCTURAL STEEL (LBS.)	ITEM 513 CURB PLATES (LBS.)	ITEM 513 EXP. JT. STEEL (LBS.)	ITEM 514 CLEAN & PAINT EXISTING STRUCTURAL STEEL (SQ. FT.)	FOR DETAILS SEE SHEET
1	17	1,110	1,187				
2	17	853	960				
Sub Total		1,963	2,147				
3	18	186	186				
4	18	1,392	1,441				
5	18	0	119				
6	18	347	347				
7	18	134	134				
8	18	371	371				
Sub Total		2,430	2,598				
Total		4,393	4,745				

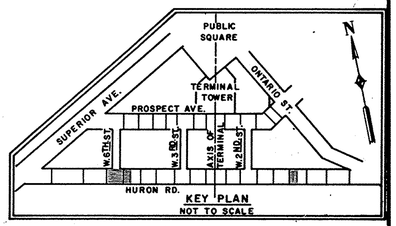

EUTHENICS INC.
CONSULTING ENGINEERS
CLEVELAND OHIO

REHABILITATION OF TOWER CITY BRIDGES
PROSPECT AVE., HURON ROAD,
WEST 2ND., 3RD. & 6TH. ST. VIADUCTS
72.5 LEVEL FRAMING PLAN
PART UNIT 17 TO UNIT 27
HURON ROAD

CLEVELAND CUYAHOGA COUNTY OHIO

Mode KRD	Trcd. REM	Ckd. LJD	Rev. RAB	Scale: 1/16" = 1'-0"
Date 4-19-78	Date 4-22-78	Date 3-19-81	Date 9-6-82	Sheet 67/170

FHWA REGION	STATE	PROJECT	
5	OHIO	IX-ID99(9)	

67A / 170

CUYAHOGA COUNTY
HURON/PROSPECT BRIDGE

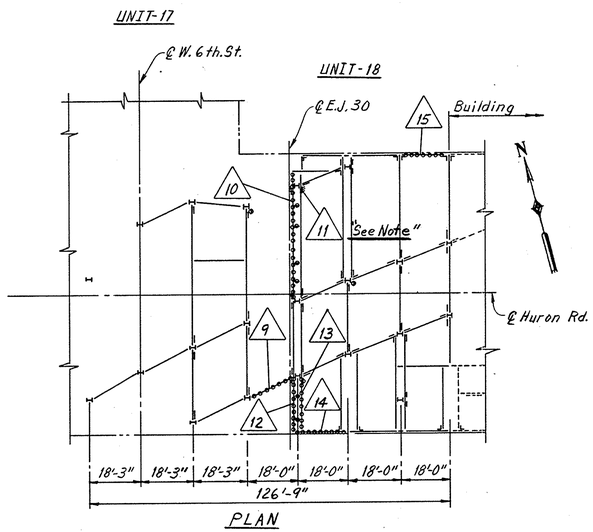

PLAN

LEGEND

- Indicates Structural Steel to be Repaired
- Indicates Structural Steel to be Replaced
- Indicates Structural Steel to be Removed and Not Replaced

ESTIMATED STEEL QUANTITIES

REF. NO.	LOCATION (UNIT NO.)	ITEM 202 PORTIONS OF STRUCTURE REMOVED (LBS.)	ITEM 513 STRUCTURAL STEEL (LBS.)	ITEM 513 CURB PLATES (LBS.)	ITEM 513 EXP. JT. STEEL (LBS.)	ITEM SPECIAL CLEAN & PAINT EXISTING STRUCTURAL STEEL (SQ.FT.)	FOR DETAILS SEE SHEET
9	17	1,693	—				
10	18	5,682	Includes Wind Brace South End & Tie Plates				
11	18	186	Use Ref. No. 3				
12	18	2,599	Includes Wind Brace North End & Tie Plates				
13	18	2,366	Includes Wind Brace North End				
14	18	540					
15	18	584					
Total		13,650					

NOTE:
Remove Wind Brace Ref. No. 11 and use New Wind Brace Ref. No. 3 on Sheet No. 67/170.

EUTHENICS INC.
CONSULTING ENGINEERS
CLEVELAND OHIO

REHABILITATION OF TOWER CITY BRIDGES
PROSPECT AVE., HURON ROAD,
WEST 2ND., 3RD. & 6TH. ST. VIADUCTS
HURON RD.
STEEL REPAIR DETAILS
PHASE IV
72.5 LEVEL

CLEVELAND CUYAHOGA COUNTY OHIO

Made LJD	Trcd. JSC	Ckd. JSC	Rev. RAB	Scale:
Date 7-19-85	Date 9-20-85	Date 9-20-85	Date 9-20-85	Sheet 67A

ODOT 9-24-85 TES

Sheet added 10-11-85

FHWA REGION	STATE	PROJECT	
5	OHIO	M-ID 99(9)	

68 / 170

CUYAHOGA COUNTY
HURON / PROSPECT BRIDGE

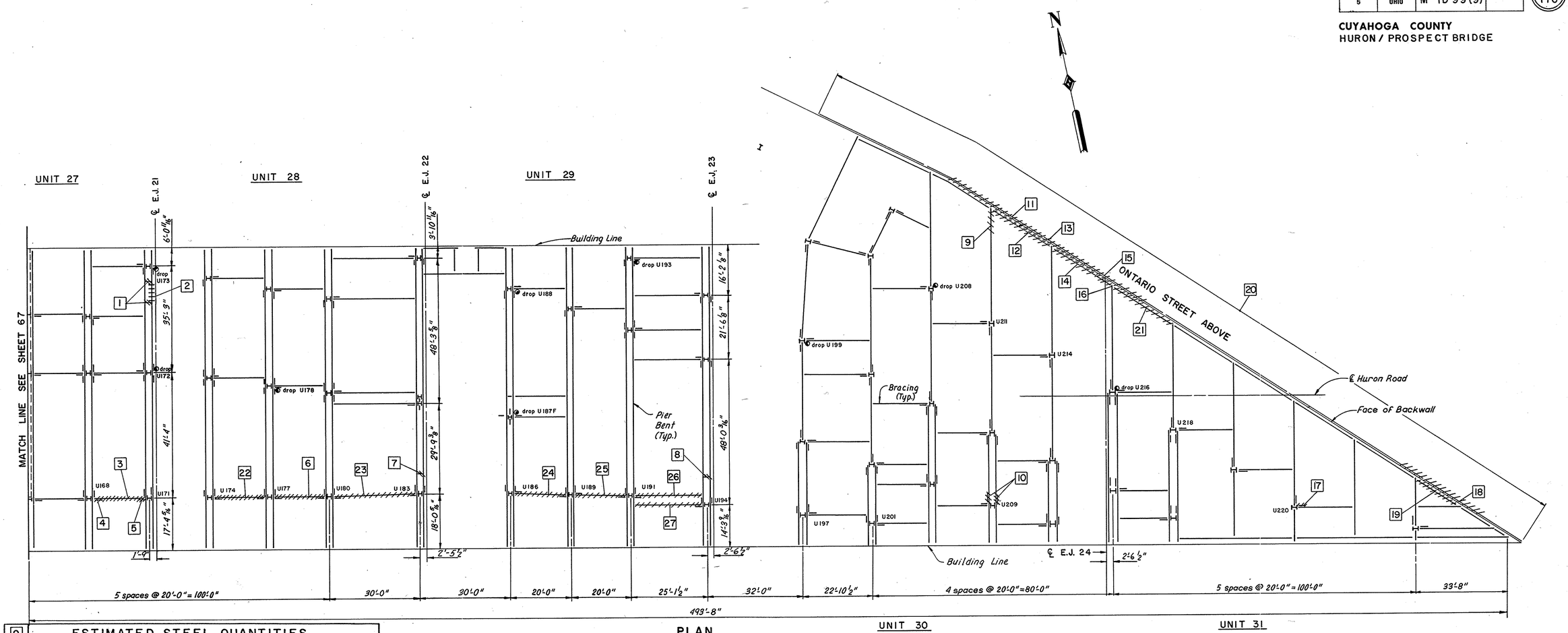

PLAN

0	ESTIMATED STEEL QUANTITIES						
REF. NO.	LOCATION (UNIT NO.)	ITEM 202 PORTIONS OF STRUCTURE REMOVED (LBS.)	ITEM 513 STRUCTURAL STEEL (LBS.)	ITEM 513 CURB PLATES (LBS.)	ITEM 513 EXP. JT. STEEL (LBS.)	ITEM 514 CLEAN & PAINT EXISTING STRUCTURAL STEEL (SQ. FT.)	FOR DETAILS SEE SHEET
1	27	105	105				87
2	27	0	57				87
3	27	1,559	1,559				87
4	27	167	167				87
5	27	167	167				87
Sub Total		1,998	2,055				
6	28	1,547	1,529				87
7	28	54	54				87
22	28	1,549	1,530				87
23	28	4,421	4,450				87
Sub Total		7,571	7,563				
8	29	26	26				87
24	29	1,527	1,509				87
25	29	1,365	1,365				87
26	29	2,583	2,630				87
27	29	2,583	2,630				87
Sub Total		8,084	8,160				

0	ESTIMATED STEEL QUANTITIES						
REF. NO.	LOCATION (UNIT NO.)	ITEM 202 PORTIONS OF STRUCTURE REMOVED (LBS.)	ITEM 513 STRUCTURAL STEEL (LBS.)	ITEM 513 CURB PLATES (LBS.)	ITEM 513 EXP. JT. STEEL (LBS.)	ITEM 514 CLEAN & PAINT EXISTING STRUCTURAL STEEL (SQ. FT.)	FOR DETAILS SEE SHEET
9	30	2,367	2,991				88
10	30	283	283				88
11	30	3,604	3,568				88
12	30	882	927				88
13	30	3,281	3,245				88
14	30	854	900				88
15	30	3,281	3,245				
Sub Total		14,552	15,159				
16	31	47	47				89
17	31	244	244				89
18	31	6,954	7,005				89
19	31	433	416				89
20	31	2,392	2,392				89
21	31	1,073	1,073				89
Sub Total		11,143	11,177				
Total		43,348	44,114				

Note:
The Areas Shown in Item 514 are Approximate Only and are Given to Assist the Contractor in Preparing his Bid for This Lump Sum Item.

LEGEND

- ++++++++ STRUCTURAL STEEL TO BE REPAIRED
- +++++++ STRUCTURAL STEEL TO BE REPLACED
- 0 STRUCTURAL STEEL REPAIRS
- U00 drop ● VERTICAL PIPE DROP AT COLUMN NUMBER

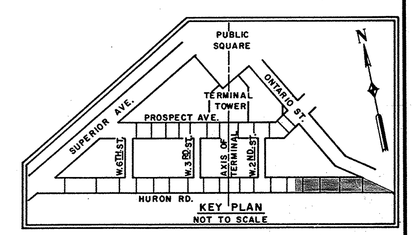

EUTHENICS INC.
CONSULTING ENGINEERS
CLEVELAND OHIO

REHABILITATION OF TOWER CITY BRIDGES
PROSPECT AVE., HURON ROAD,
WEST 2ND., 3RD. & 6TH. ST. VIADUCTS
72.5 LEVEL FRAMING PLAN
UNIT 27 TO UNIT 31
HURON ROAD
CLEVELAND CUYAHOGA COUNTY OHIO

Made KRD	Trcd. REM	Ckd. LJD	Rev. RAB	Scale: 1/16" = 1'-0"
Date 4-19-78	Date 4-20-78	Date 3-23-81	Date 9-6-82	Sheet 68 / 170

FHWA REGION	STATE	PROJECT	
5	OHIO	IX-ID99(9)	

68A / 170

CUYAHOGA COUNTY
HURON/PROSPECT BRIDGE

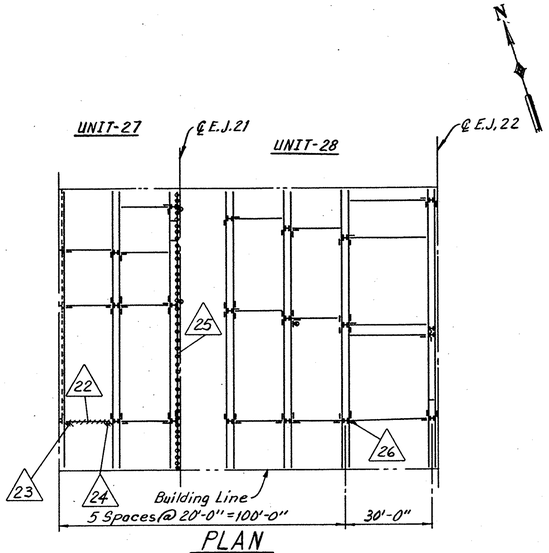

PLAN
(72.5 Level)

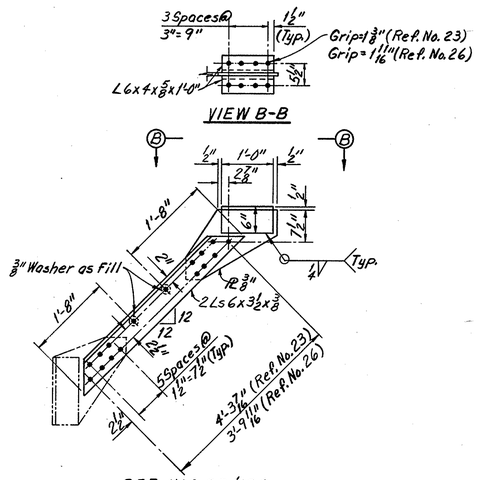

REF. NOS. 23 & 26
(Ref. No. 23-Unit 27-Ref. No. 26-Unit 28-72.5 Level)

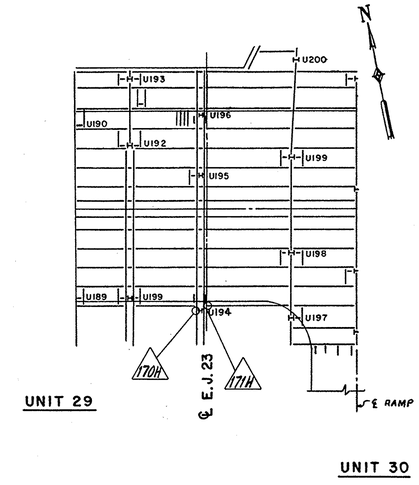

PLAN
(Street Level)

REF. NO.	LOCATION (UNIT NO.)	ITEM 202 PORTIONS OF STRUCTURE REMOVED (LBS.)	ITEM 513 STRUCTURAL STEEL (LBS.)	ITEM 513 CURB PLATES (LBS.)	ITEM 513 EXP. JT. STEEL (LBS.)	ITEM SPECIAL CLEAN & PAINT EXISTING STRUCTURAL STEEL (SQ. FT.)	FOR DETAILS SEE SHEET
22	27-72.5 Level	1,579	1,524				
23	27-72.5 Level	209	191				
24	27-72.5 Level	212	193				
25	27-72.5 Level	23,237	—				
26	28-72.5 Level	198	179				
Totals	72.5 Level	25,435	2,087				
170H	29 Street Level	146	158				
171H	30 Street Level	223	158				
Totals	Street Level	369	316				

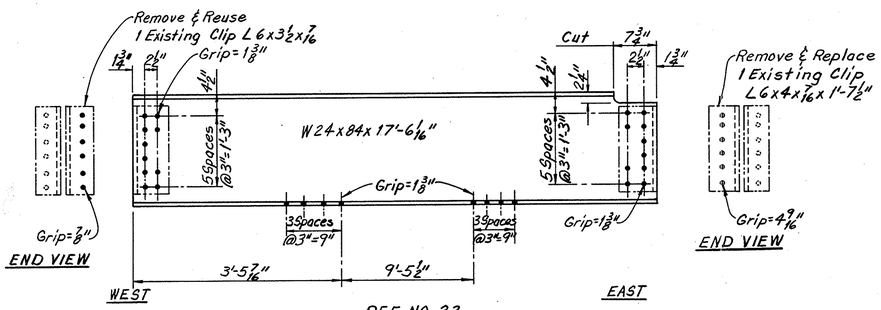

REF. NO. 22
Unit 27-72.5 Level

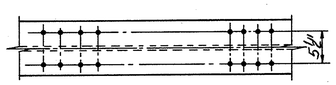

BOTTOM VIEW

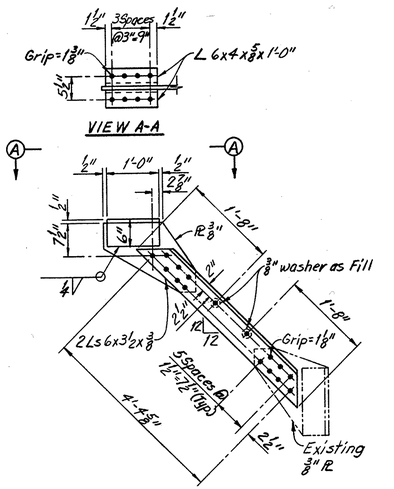

REF. NO. 24
Unit 27-72.5 Level

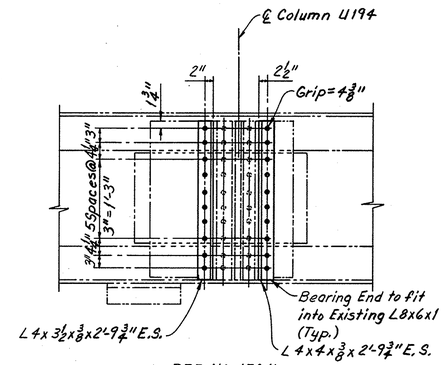

REF. NO. 170H
Unit 29
(Looking East)
(All Bolts 1" ϕ H.S.)
(Street Level)

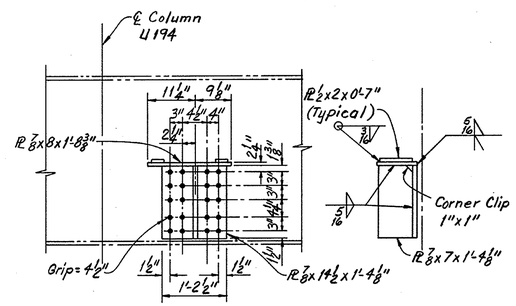

REF. NO. 171H
Unit 30
(Street Level)

LEGEND

- INDICATES STRUCTURAL STEEL TO BE REPAIRED
- INDICATES STRUCTURAL STEEL TO BE REPLACED
- INDICATES STRUCTURAL STEEL TO BE REMOVED AND NOT REPLACED
- UOO or BOO — INDICATES COLUMN NUMBERS

Sheet added 1-3-86

EUTHENICS INC.
CONSULTING ENGINEERS
CLEVELAND OHIO

REHABILITATION OF TOWER CITY BRIDGES
PROSPECT AVE., HURON ROAD,
WEST 2 ND., 3 RD. & 6 TH. ST. VIADUCTS
HURON RD.
STEEL REPAIR DETAILS
PHASE V - 72.5 LEVEL &
PHASE VI - STREET LEVEL

CLEVELAND CUYAHOGA COUNTY OHIO

Mode LJD	Trcd. JSC	Ckd. JSC	Rev. RAB	Scale:
Date 10-18-85	Date 10-21-85	Date 10-21-85	Date 10-22-85	Sheet 68A

ODOT 10-24-85 TES

FHWA REGION	STATE	PROJECT	
5	OHIO	IX-ID99 (9)	

68B
170

CUYAHOGA COUNTY
HURON/PROSPECT BRIDGE

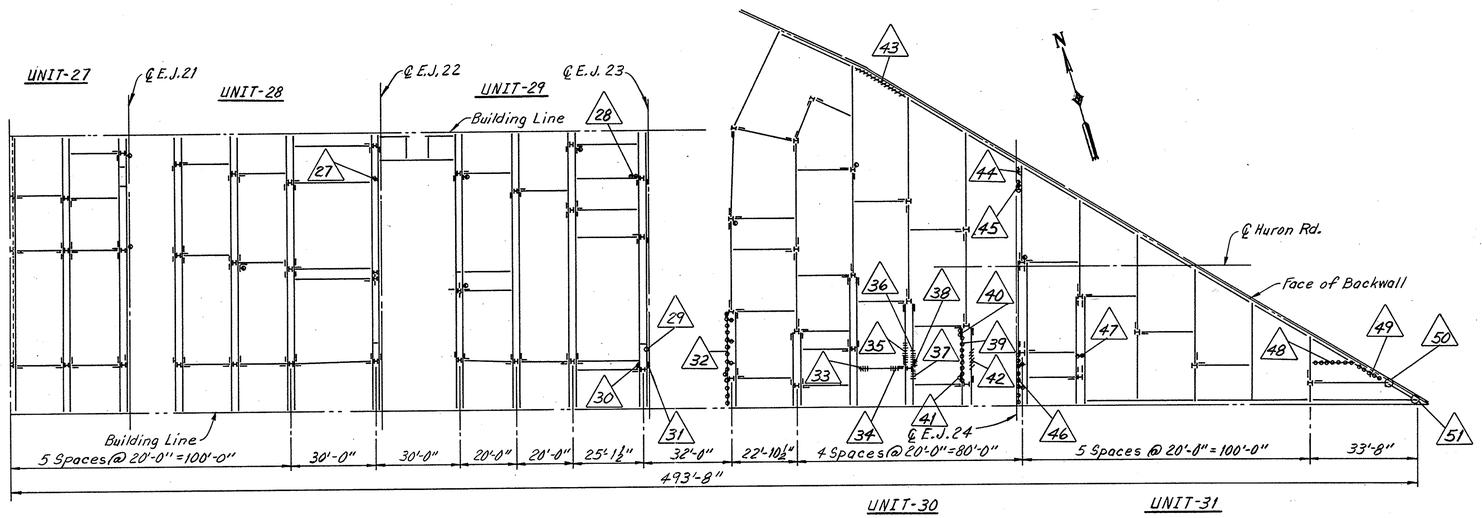

PLAN

LEGEND

- Indicates Structural Steel to be Repaired
- Indicates Structural Steel to be Replaced
- Indicates Structural Steel to be Removed and Not Replaced
- UOO or BOO — Indicates Column Numbers

ESTIMATED STEEL QUANTITIES

REF. NO.	LOCATION (UNIT NO.)	ITEM 202 PORTIONS OF STRUCTURE REMOVED (LBS.)	ITEM 513 STRUCTURAL STEEL (LBS.)	ITEM 513 CURB PLATES (LBS.)	ITEM 513 EXP. JT. STEEL (LBS.)	ITEM SPECIAL CLEAN & PAINT EXISTING STRUCTURAL STEEL (SQ.FT.)	FOR DETAILS SEE SHEET
27	28	31	32				68C
28	29	290	—				
29	29	139	—				
30	29	154	148				68C
31	29	148	141				68C
32	30	5,968	—				
33	30	—	44				68C
34	30	—	48				68C
35	30	224	227				68C
36	30	224	278				68C
37	30	224	227				68C
38	30	—	62				68C
39	30	2,028	—				
40	30	163	—				
41	30	211	—				
42	30	583	467				68C
43	30	1,060	1,063				68C
44	30	130	122				68C
45	30	161	—				68C
46	30	3,737	—				
47	31	54	—				
48	31	780	—				
49	31	343	—				
50	31	—	210				68C
51	31	—	329				68C
TOTALS		16,652	3,398				

NOTES:
1.) For Details see Sheet 68C.
2.) The Following Abbreviations are used:
(T & B) = Top & Bottom — E.S. = Each Side
(Typ.) = Typical — N.S. = Near Side
W.P. = Working Point — F.S. = Far Side
H.S. Bolts = High Strength Bolts

Sheet added 1-3-86

EUTHENICS INC.
CONSULTING ENGINEERS
CLEVELAND OHIO

REHABILITATION OF TOWER CITY BRIDGES
PROSPECT AVE., HURON ROAD,
WEST 2ND., 3RD. & 6TH. ST. VIADUCTS
HURON RD.
STEEL REPAIR DETAILS
PHASE VI
72.5 LEVEL

CLEVELAND — CUYAHOGA COUNTY — OHIO

Mode LJD	Trcd. JSC	Ckd. JSC	Rev. RAB	Scale:
Date 10-21-85	Date 10-23-85	Date 10-23-85	Date 10-23-85	Sheet 68B

ODOT 10-24-85 TES

FHWA REGION	STATE	PROJECT	
5	OHIO	IX-ID99(9)	

68C / 170

CUYAHOGA COUNTY
HURON/PROSPECT BRIDGE

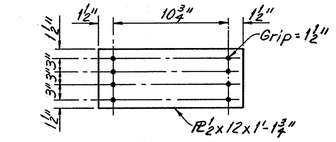

REF. NO. 27
(Unit 28-72.5 Level)

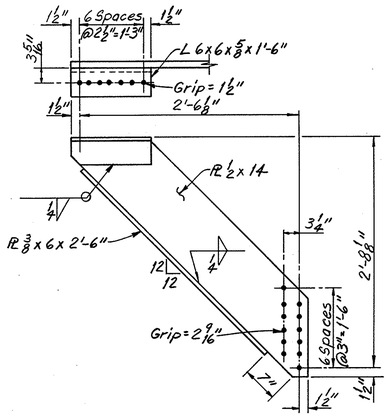

REF. NO. 30
Unit 29-72.5 Level
(Looking East)

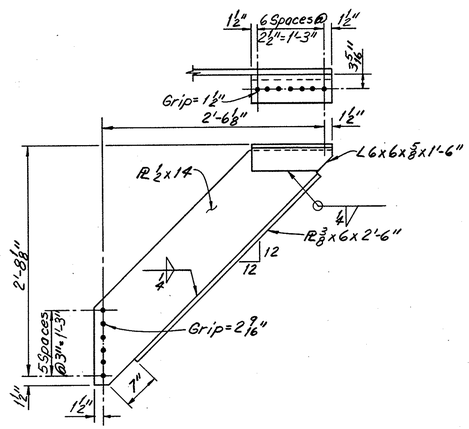

REF. NO. 31
Unit 29-72.5 Level
(Looking West)

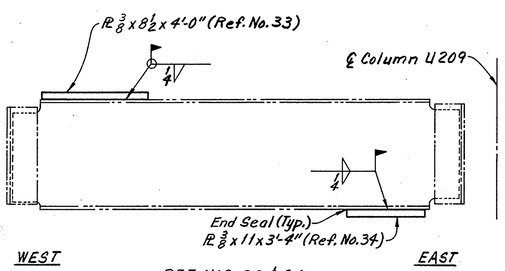

REF. NOS. 33 & 34
Unit 30-72.5 Level

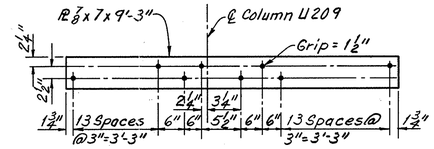

TOP VIEW

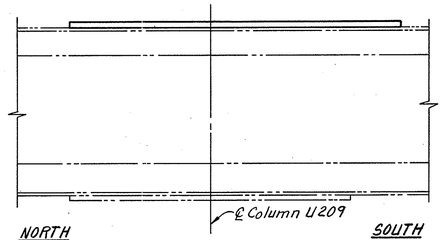

REF. NO. 35
Unit 30-72.5 Level

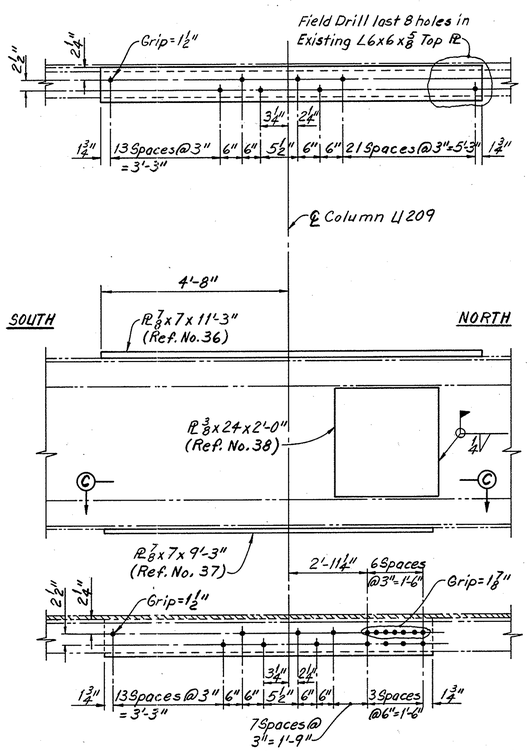

SECTION C-C
REF. NOS. 36, 37 & 38
Unit 30-72.5 Level

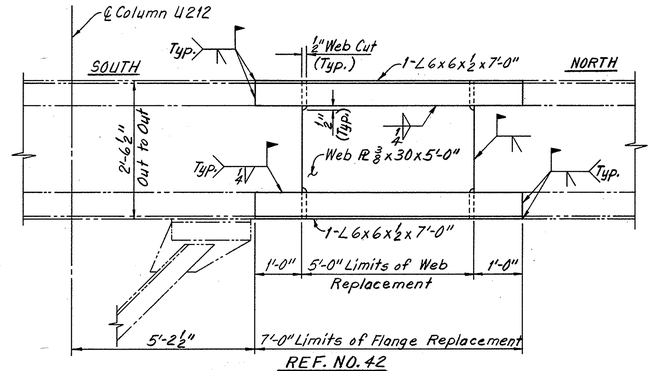

REF. NO. 42
(Unit 30-72.5 Level)

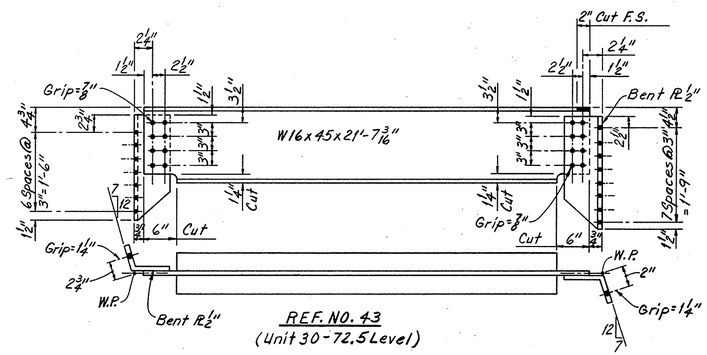

REF. NO. 43
(Unit 30-72.5 Level)

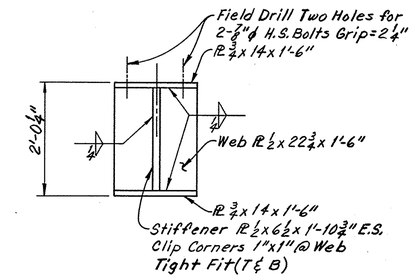

REF. NO. 50
(Unit 31-72.5 Level)

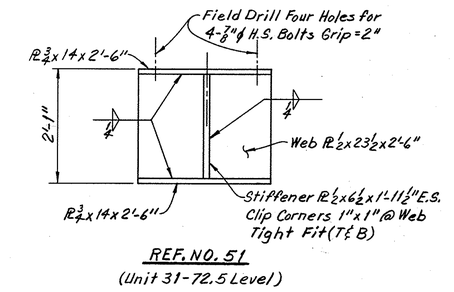

REF. NO. 51
(Unit 31-72.5 Level)

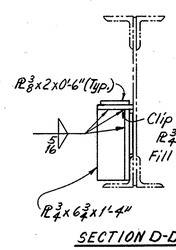

SECTION D-D

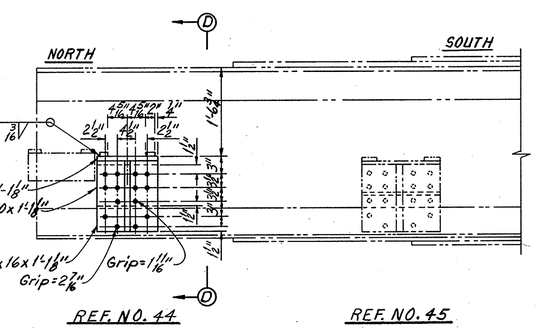

REF. NO. 44
(Unit 30-72.5 Level)

REF. NO. 45
(Unit 30-72.5 Level)

NOTE:
For Detail Location, Estimated Quantities and Notes see Sheet 68B.

Sheet added 1-3-86

EUTHENICS INC.
CONSULTING ENGINEERS
CLEVELAND OHIO

REHABILITATION OF TOWER CITY BRIDGES
PROSPECT AVE., HURON ROAD,
WEST 2ND., 3RD. & 6TH. ST. VIADUCTS
HURON RD.
STEEL REPAIR DETAILS
PHASE VI
72.5 LEVEL
CLEVELAND CUYAHOGA COUNTY OHIO

Made LJD	Trcd. JSC	Ckd. JSC	Rev. RAB	Scale:
Date 10-21-85	Date 10-23-85	Date 10-23-85	Date 10-23-85	Sheet 68C

ODOT 10-24-85 TES

FHWA REGION	STATE	PROJECT	
5	OHIO	M-ID 99 (9)	

69 / 170

CUYAHOGA COUNTY
HURON / PROSPECT BRIDGE

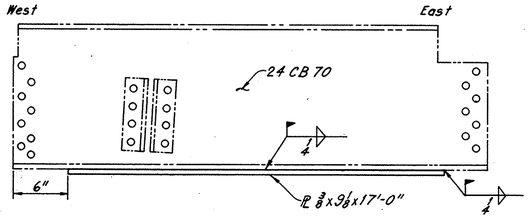

REF. NO. 1
Unit 1

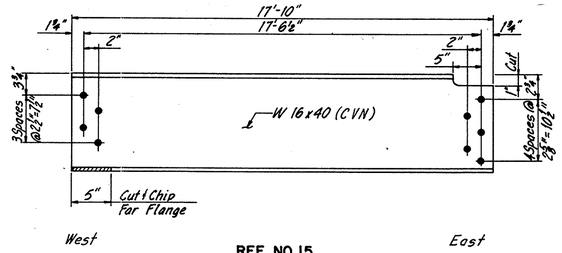

REF. NO. 15
Unit 1

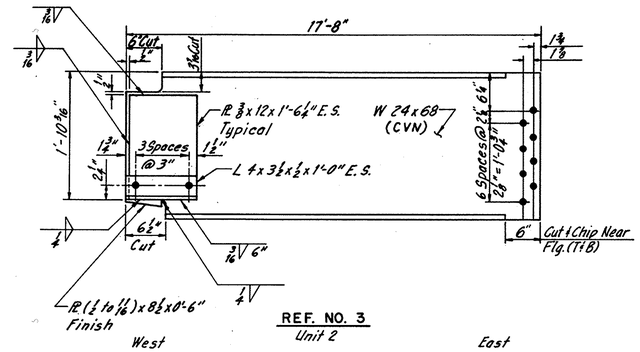

REF. NO. 3
Unit 2

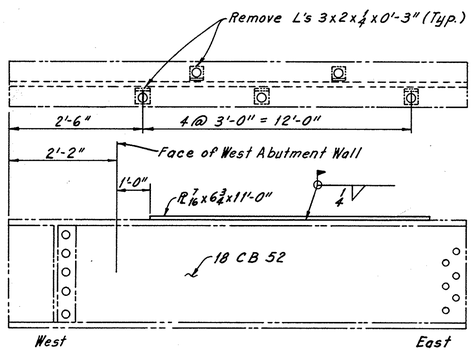

REF. NO. 12
Unit 1

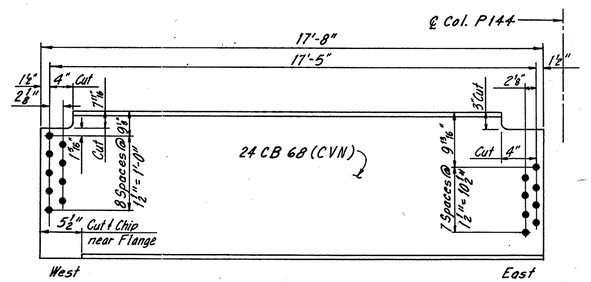

REF. NO. 16
Unit 1

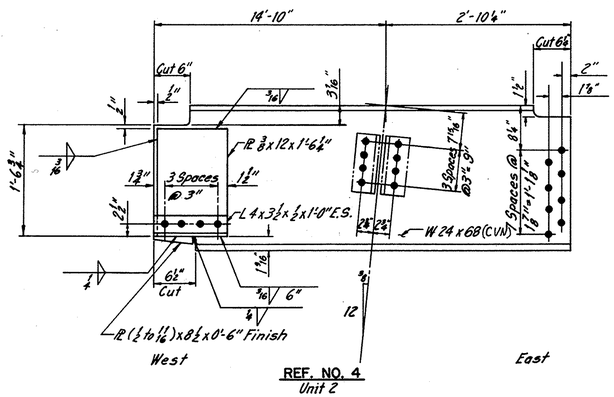

REF. NO. 4
Unit 2

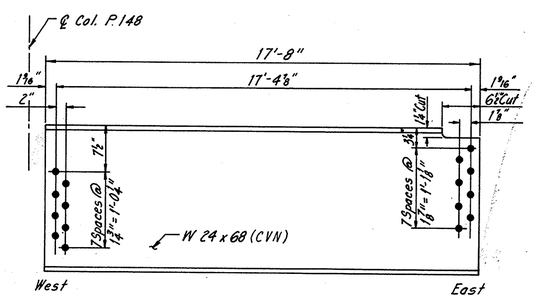

REF. NO. 13
Unit 1

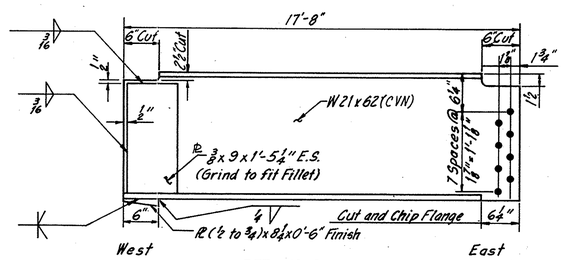

REF. NO. 2
Unit 2

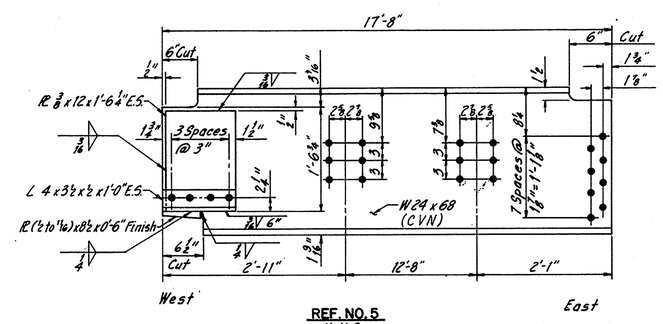

REF. NO. 5
Unit 2

NOTES:

1. MATERIAL SHOWN PHANTOM (————————————) IN STEEL REPAIR DETAILS IS EXISTING AND TO REMAIN IN PLACE. ALL OTHER IS TO BE REMOVED AND REPLACED AS SHOWN.
2. DIMENSIONS SHOWN FOR STRUCTURAL STEEL REPAIRS AND REPLACEMENT TO EXISTING MEMBERS ARE FROM THE ORIGINAL PLANS. THE CONTRACTOR SHALL BE RESPONSIBLE FOR MAKING HIS OWN MEASUREMENT, BEFORE FABRICATING, TO INSURE THE VARIOUS PARTS OF THE WORK FIT TOGETHER WITH THE COMPLETED STRUCTURE.
3. ● DENOTES 7/8" Ø HIGH STRENGTH BOLTS EXCEPT AS NOTED.
4. FOR ESTIMATED STEEL REPAIR QUANTITIES SEE SHEET 55.

EUTHENICS INC.
CONSULTING ENGINEERS
CLEVELAND OHIO

REHABILITATION OF TOWER CITY BRIDGES
PROSPECT AVE., HURON ROAD,
WEST 2ND., 3RD. & 6TH. ST. VIADUCTS

STEEL REPAIR DETAILS

UNITS 1 & 2

PROSPECT AVE.

CLEVELAND CUYAHOGA COUNTY OHIO

Mode LRH	Trcd. JSC	Chd. LJD	Rev. RAB	Scale: No Scale
Date 9-5-80	Date 11-3-80	Date 7-12-82	Date 9-1-82	Sheet 69 / 170

FHWA REGION	STATE	PROJECT	
5	OHIO	M-ID 99(9)	

CUYAHOGA COUNTY
HURON / PROSPECT BRIDGE

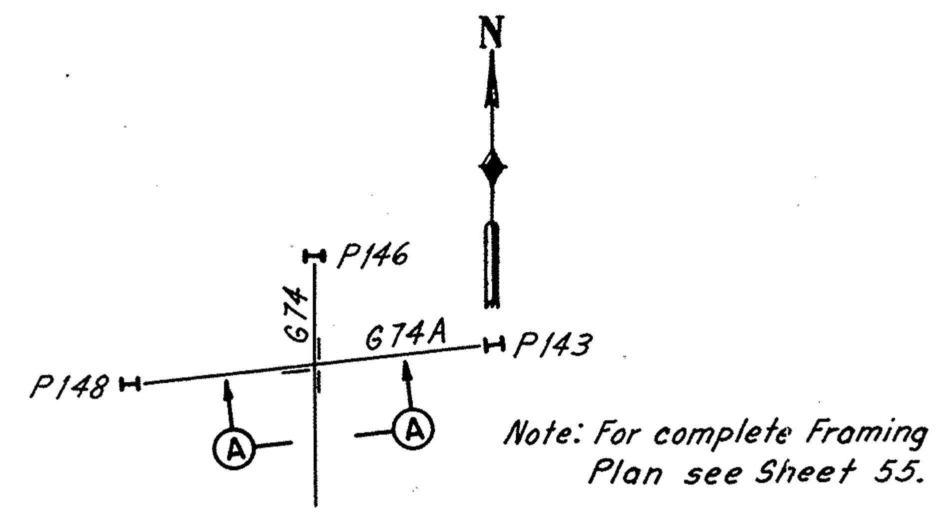

GENERAL PLAN
REF. NO. 6
Unit 2

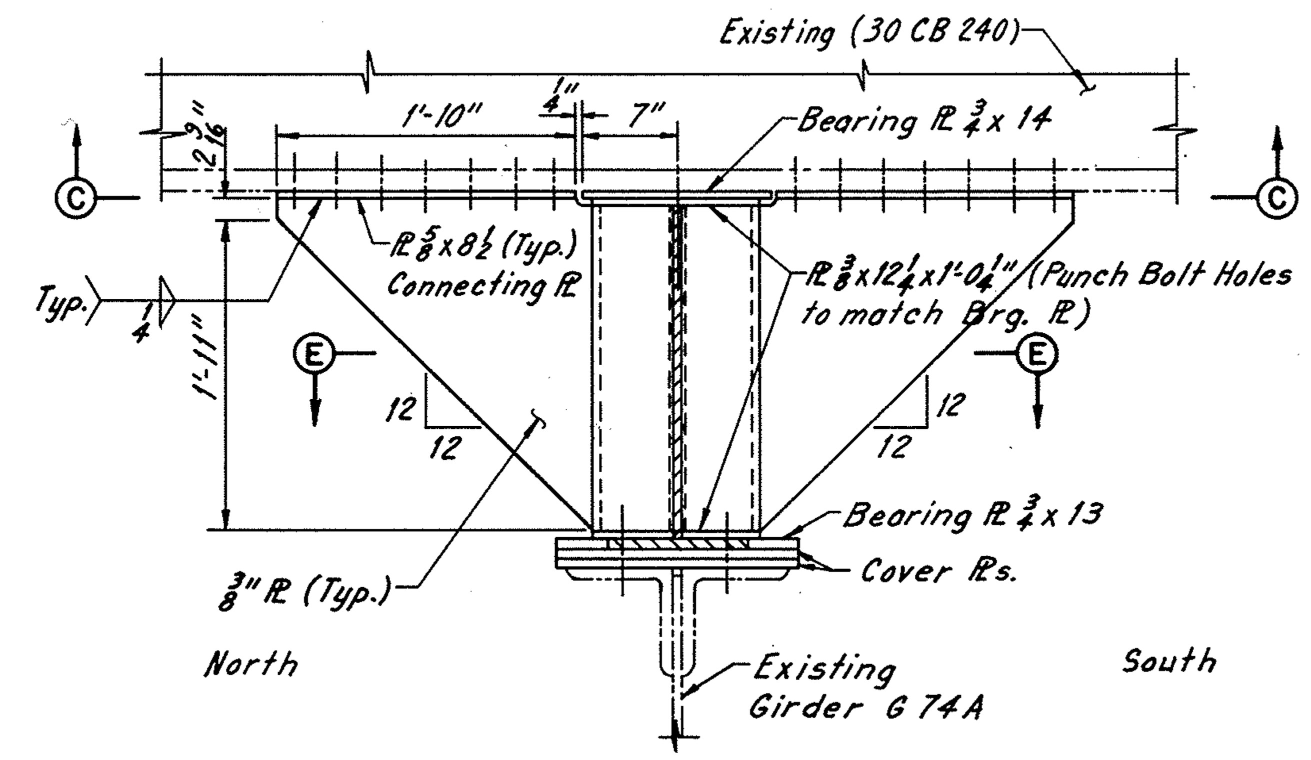

SECTION B-B

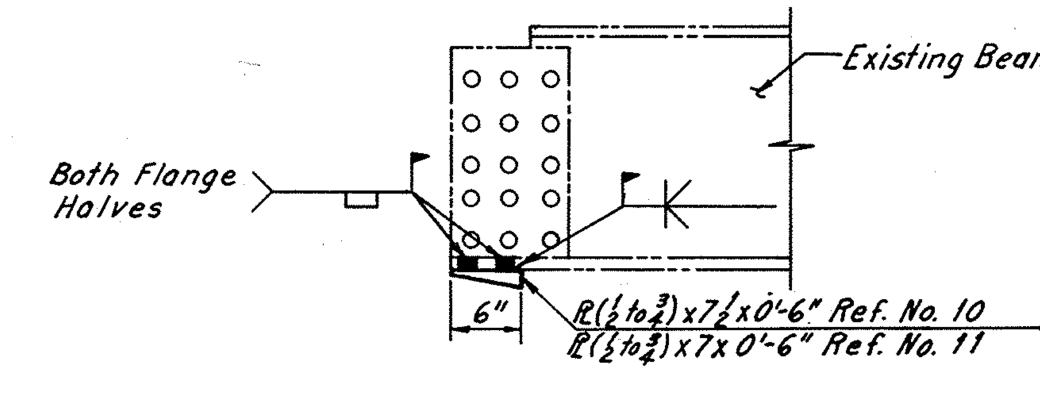

REF. NOS. 10 & 11
Unit 2

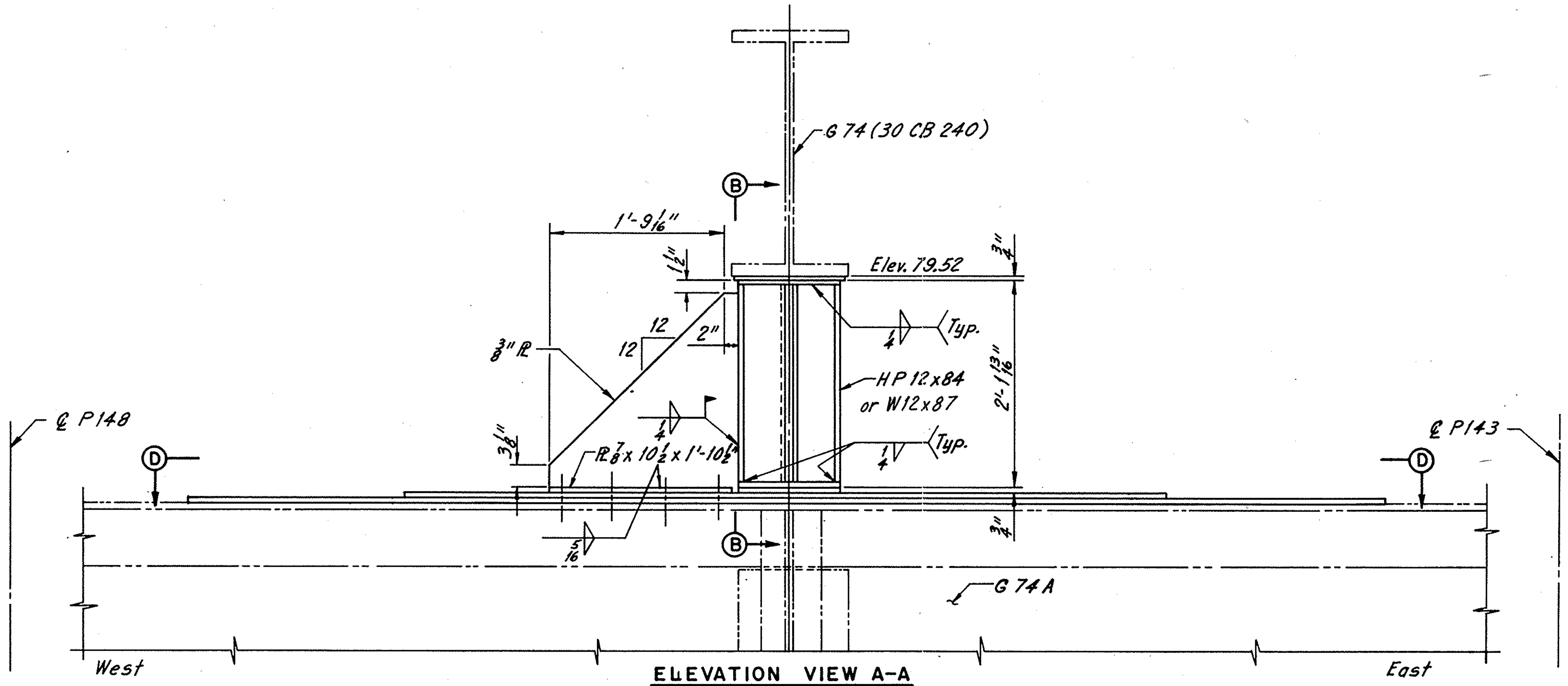

ELEVATION VIEW A-A
REF. NO. 6
Unit 2
(Looking North)

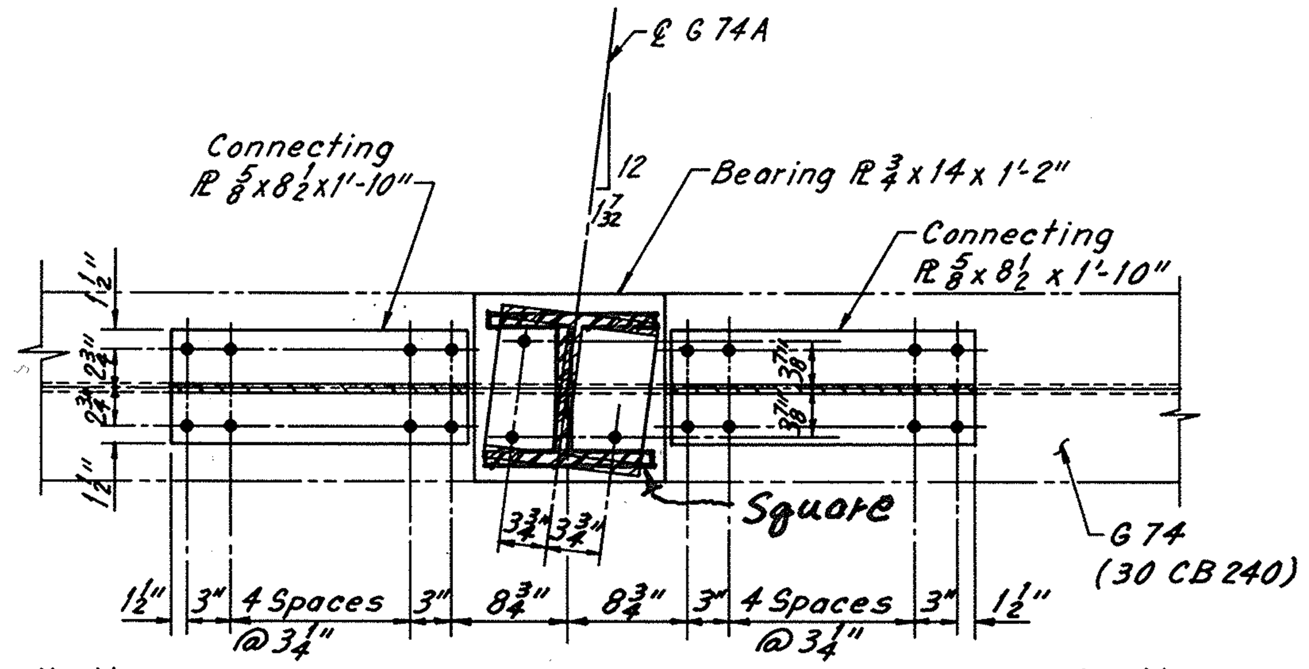

SECTION C-C
Bottom View (30 CB 240)

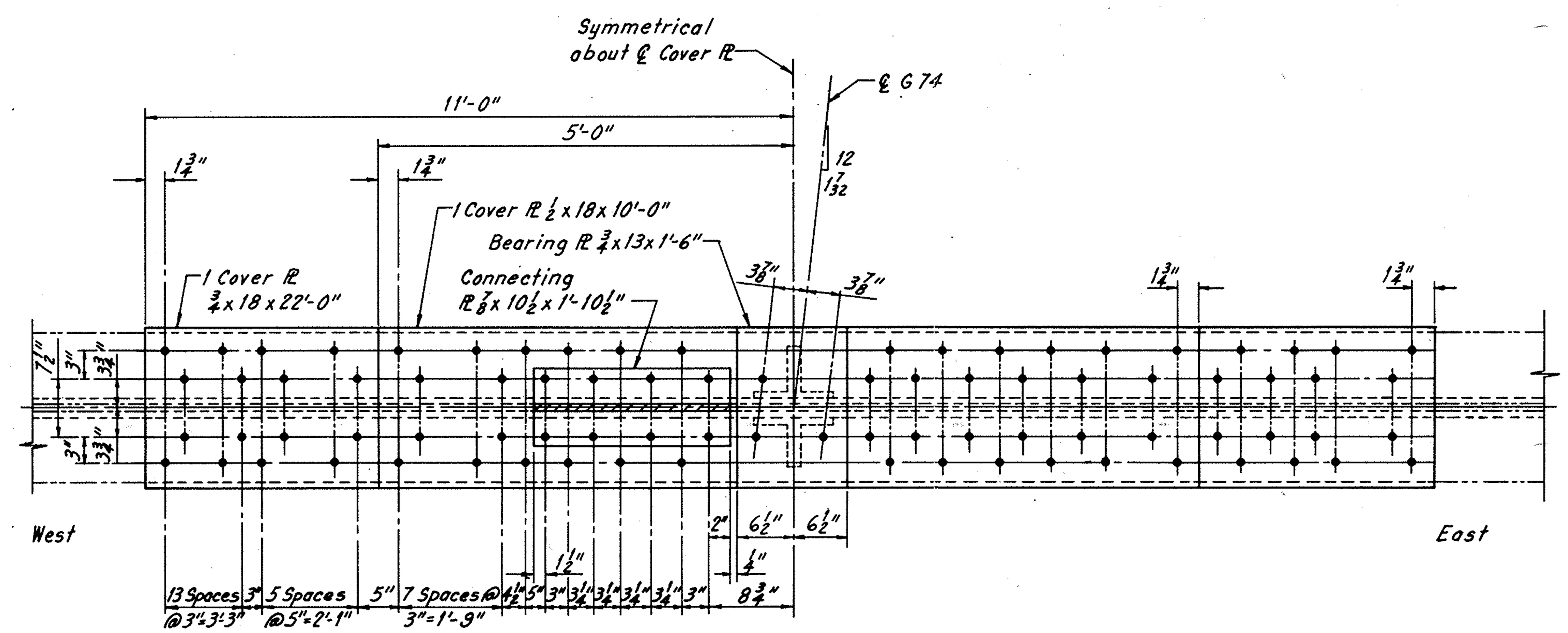

SECTION D-D

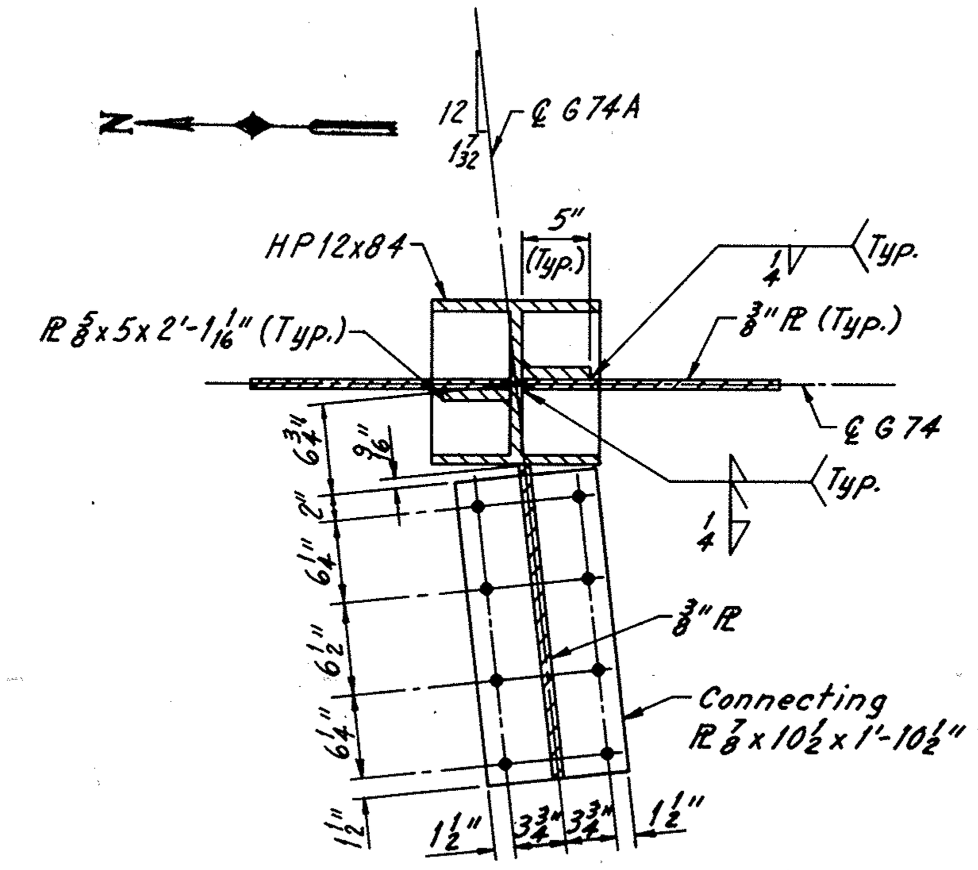

SECTION E-E

NOTES:

1. Material shown Phantom (——— - - ———) in Steel Repair Details is existing and to remain in place. All other is to be removed and replaced as shown.
2. Dimensions shown for Structural Steel Repairs and Replacement to existing members are from the original plans. The Contractor shall be responsible for making his own measurement, before fabricating, to insure the various parts of the work fit together with the completed structure.
3. ● Denotes 7/8" Ø High Strength Bolts except as noted.
4. For Estimated Steel Repair Quantities see Sheet 55.

EUTHENICS INC.
CONSULTING ENGINEERS
CLEVELAND OHIO

REHABILITATION OF TOWER CITY BRIDGES
PROSPECT AVE., HURON ROAD,
WEST 2ND, 3RD & 6TH ST. VIADUCTS

STEEL REPAIR DETAILS

UNIT 2

PROSPECT AVE.

CLEVELAND CUYAHOGA COUNTY OHIO

Made LRH	Trcd. JSC	Ckd. LJD	Rev. RAB	Revised 1-11-85
Date 9-10-80	Date 11-6-80	Date 7-13-82	Date 9-1-82	Sheet 70 / 170

FHWA REGION	STATE	PROJECT	
5	OHIO	M-ID 99 (9)	

71 / 170

CUYAHOGA COUNTY
HURON / PROSPECT BRIDGE

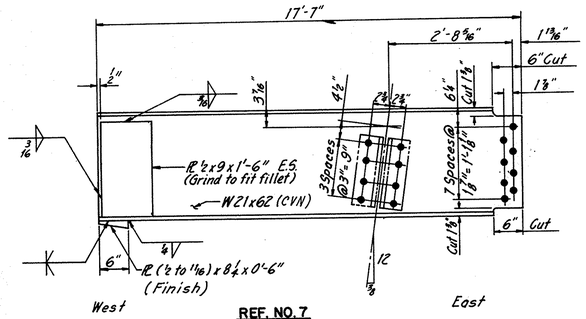

REF. NO. 7
Unit 3

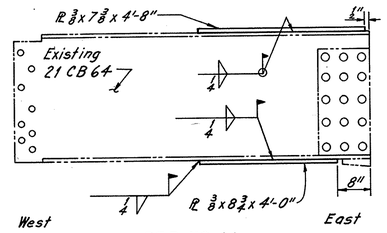

REF. NO. 14
Unit 3

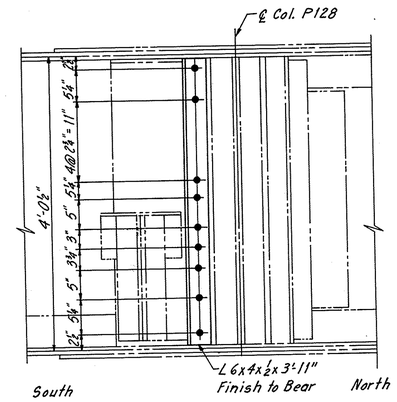

REF. NO. 18
Unit 3
(Looking West)

Note: Replace Southeast Bearing Stiffener.

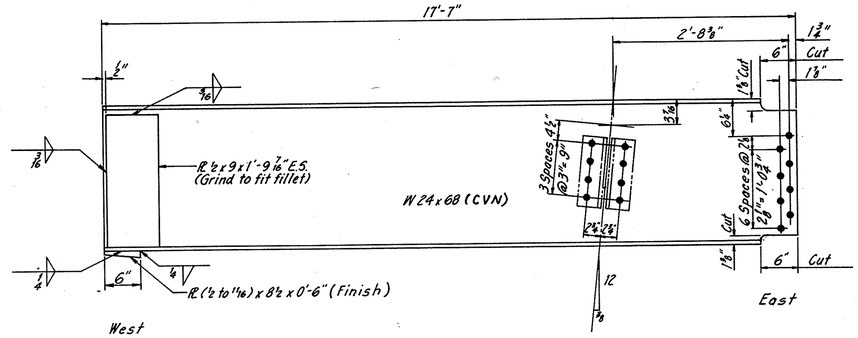

REF. NO. 17
Unit 3

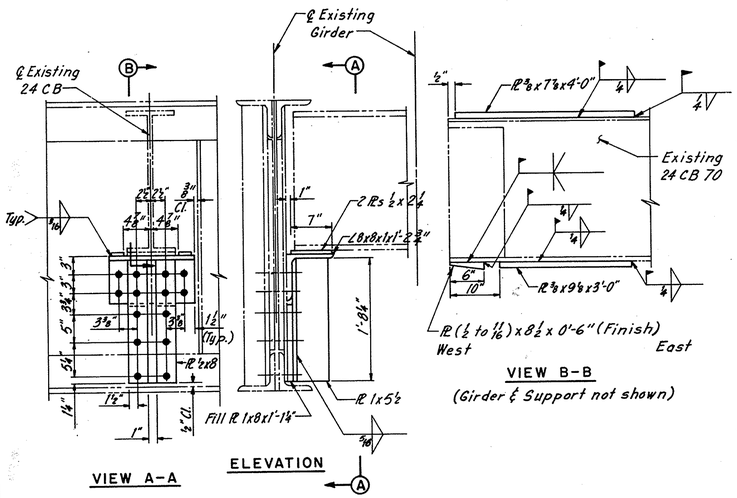

REF. NO. 8
Unit 3

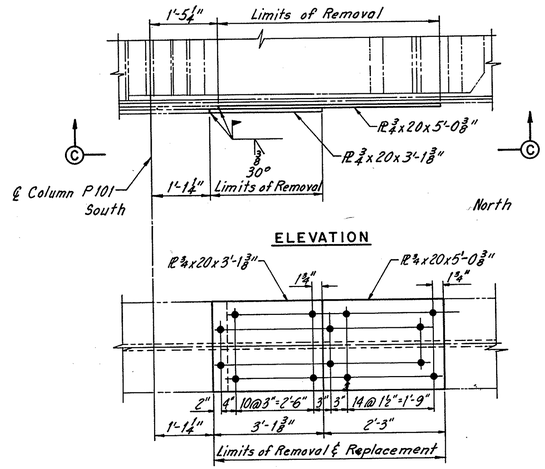

REF. NO. 19
Unit 4
(Looking West)

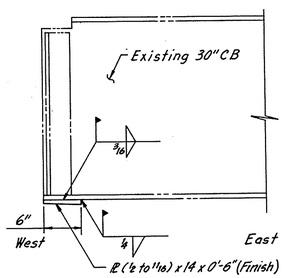

REF. NOS. 9, 10 & 11
Unit 5

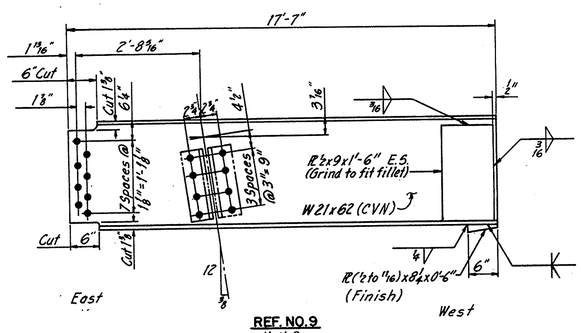

REF. NO. 9
Unit 3
(Looking South)

NOTES:

1. MATERIAL SHOWN PHANTOM (————— - - - - - - - - - - - - - - - -) IN STEEL REPAIR DETAILS IS EXISTING AND TO REMAIN IN PLACE. ALL OTHER IS TO BE REMOVED AND REPLACED AS SHOWN.
2. DIMENSIONS SHOWN FOR STRUCTURAL STEEL REPAIRS AND REPLACEMENT TO EXISTING MEMBERS ARE FROM THE ORIGINAL PLANS. THE CONTRACTOR SHALL BE RESPONSIBLE FOR MAKING HIS OWN MEASUREMENT, BEFORE FABRICATING, TO INSURE THE VARIOUS PARTS OF THE WORK FIT TOGETHER WITH THE COMPLETED STRUCTURE.
3. ● DENOTES 7/8" Ø HIGH STRENGTH BOLTS EXCEPT AS NOTED.
4. FOR ESTIMATED STEEL REPAIR QUANTITIES SEE SHEETS 55 & 56.

EUTHENICS INC.
CONSULTING ENGINEERS
CLEVELAND OHIO

REHABILITATION OF TOWER CITY BRIDGES
PROSPECT AVE., HURON ROAD,
WEST 2 ND., 3 RD. & 6 TH. ST. VIADUCTS

STEEL REPAIR DETAILS
UNITS 3 THRU 5
PROSPECT AVE.

CLEVELAND CUYAHOGA COUNTY OHIO

Made LRH	Trcd. JSC	Ckd. LJD	Rev. RAB	Revised
Date 9-12-80	Date 11-11-80	Date 7-13-82	Date 9-1-82	Sheet 71 / 170

FHWA REGION	STATE	PROJECT	
5	OHIO	M-ID 99(9)	

71A
170

CUYAHOGA COUNTY
HURON / PROSPECT BRIDGE

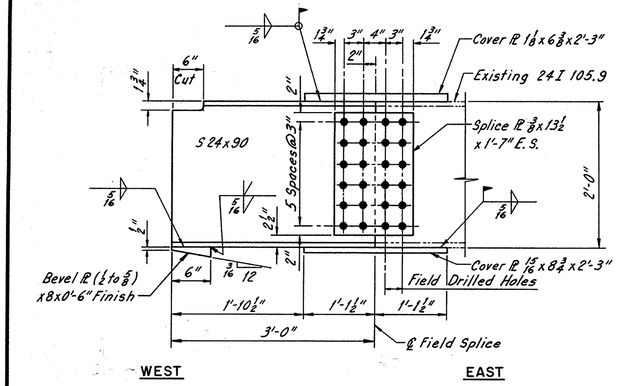

REF. NOS. 1 & 2
Unit 7

In lieu of S 24x90 Contractor may use W24x104.
Splice Plates shall be modified as required.

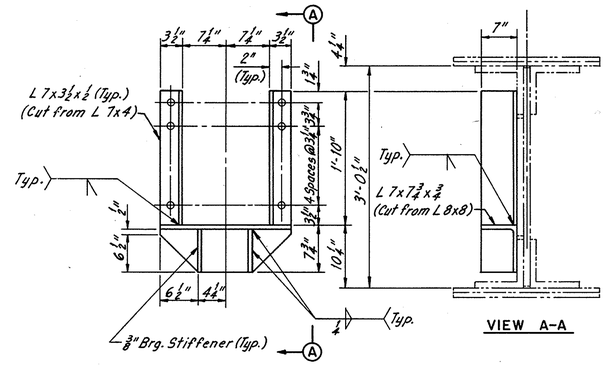

REF. NOS. 7 & 8
Unit 8

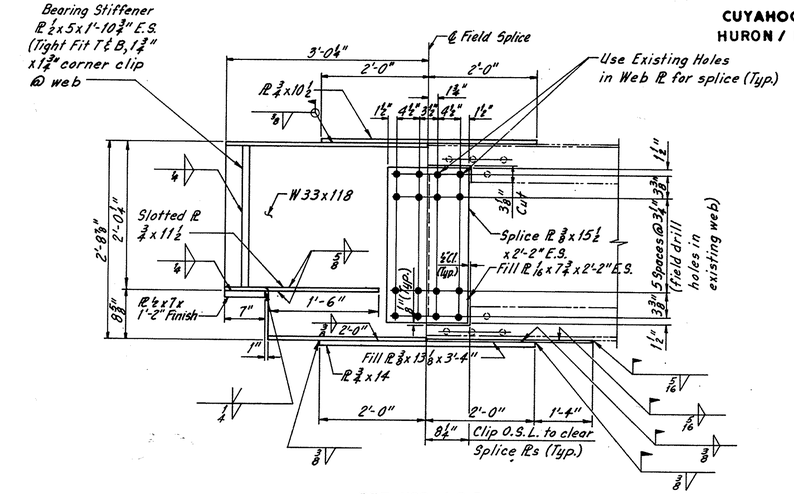

REF. NOS. 4 & 5
Unit 13

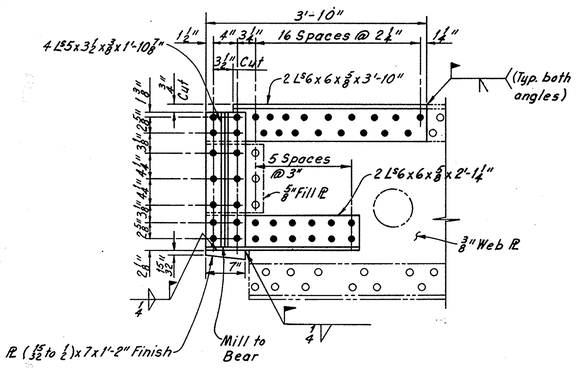

REF. NO. 3 & 4
Unit 8

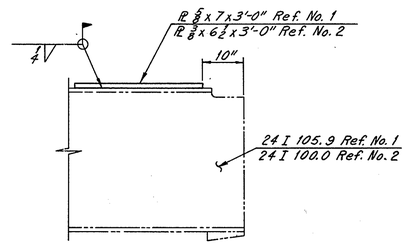

REF. NOS. 1 & 2
Units 9 & 11

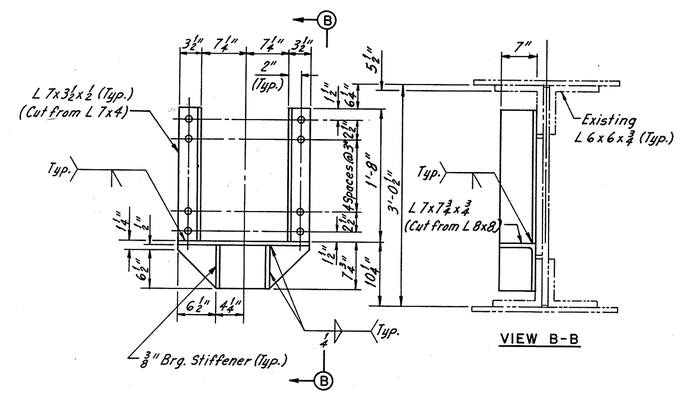

REF. NOS. 6 & 7
Unit 13

NOTES:

1. MATERIAL SHOWN PHANTON (——— - - ——— - - ———) IN STEEL REPAIR DETAILS IS EXISTING AND TO REMAIN IN PLACE. ALL OTHER IS TO BE REMOVED AND REPLACED AS SHOWN.
2. DIMENSIONS SHOWN FOR STRUCTURAL STEEL REPAIRS AND REPLACEMENT TO EXISTING MEMBERS ARE FROM THE ORIGINAL PLANS. THE CONTRACTOR SHALL BE RESPONSIBLE FOR MAKING HIS OWN MEASUREMENT, BEFORE FABRICATING, TO INSURE THE VARIOUS PARTS OF THE WORK FIT TOGETHER WITH THE COMPLETED STRUCTURE.
3. ● DENOTES 7/8" Ø HIGH STRENGTH BOLTS EXCEPT AS NOTED.
4. FOR ESTIMATED STEEL REPAIR QUANTITIES SEE SHEETS 56 & 57.

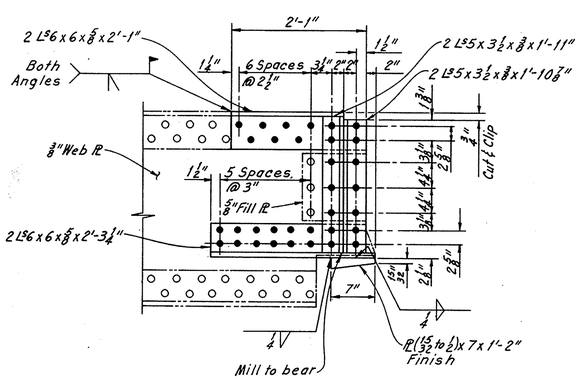

REF. NOS. 5 & 6
Unit 8

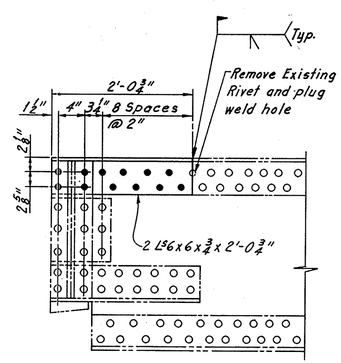

REF. NO. 3
Unit 12

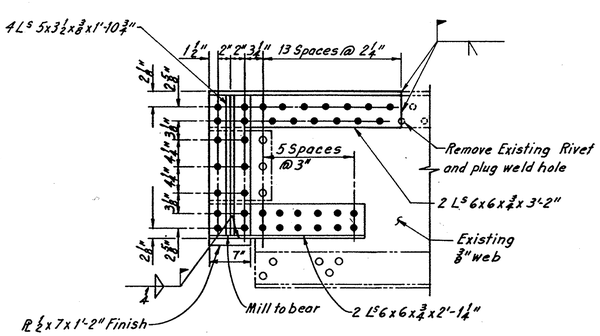

REF. NOS. 8, 9 & 10
Unit 13

EUTHENICS INC.
CONSULTING ENGINEERS
CLEVELAND OHIO

REHABILITATION OF TOWER CITY BRIDGES
PORTIONS OF PROSPECT AVE., HURON RD., WEST 2nd. & 3rd. ST. VIADUCTS

STEEL REPAIR DETAILS
UNITS 7, 8, 9, 11, 12 & 13
PROSPECT AVE.

CLEVELAND CUYAHOGA COUNTY OHIO

Mode LRH	Trcd. JSC	Ckd. LJD	Rev. RAB	Scale:
Date 9-12-80	Date 11-11-80	Date 7-13-82	Date 9-1-82	Sheet 71A/170

FHWA REGION	STATE	PROJECT	
5	OHIO	M-ID 99 (9)	

72/170

CUYAHOGA COUNTY
HURON / PROSPECT BRIDGE

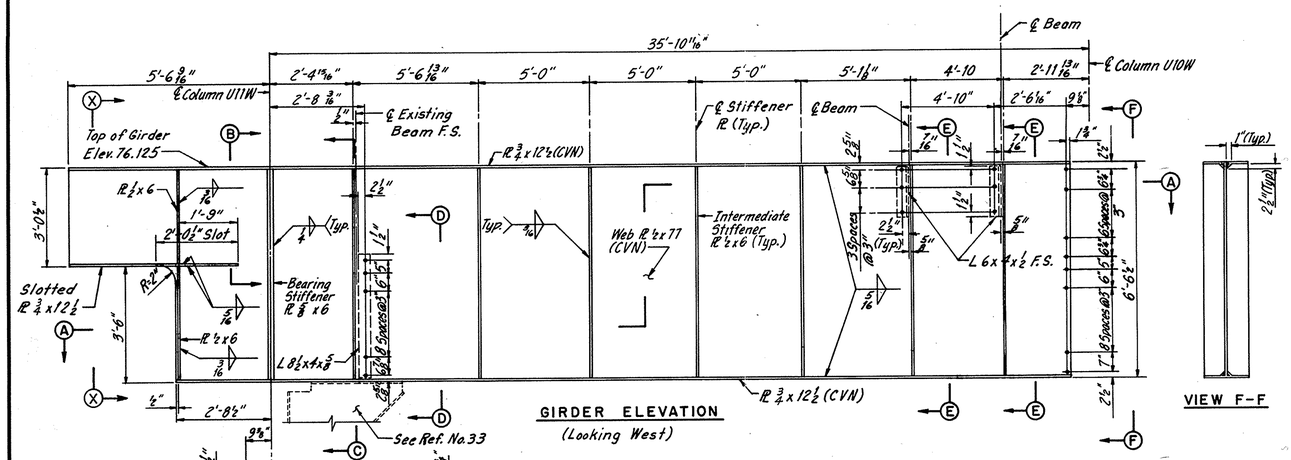

GIRDER ELEVATION
(Looking West)

VIEW F-F

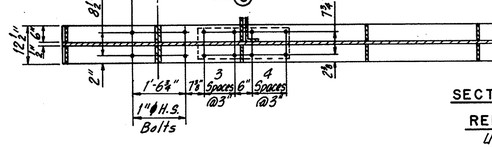

SECTION A-A
REF. NO. 32
Unit 14

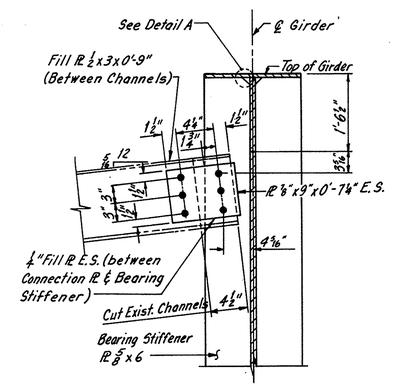

SECTION B-B

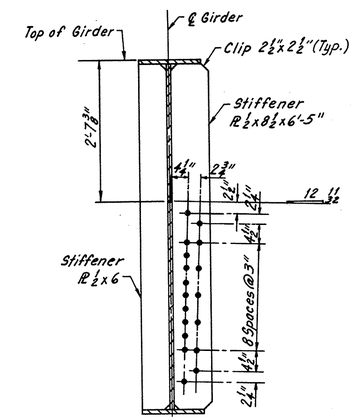

SECTION C-C

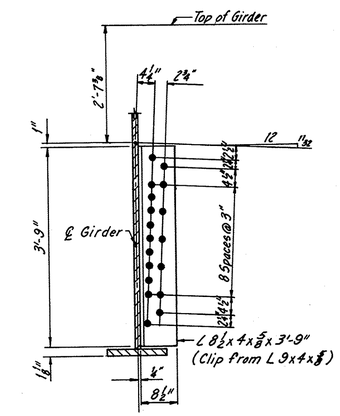

SECTION D-D

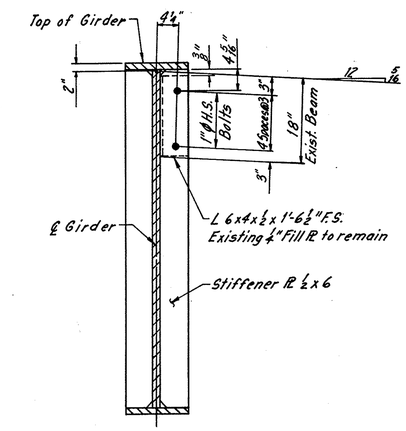

SECTION E-E

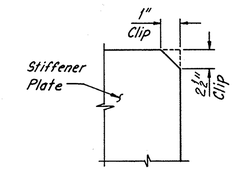

DETAIL A

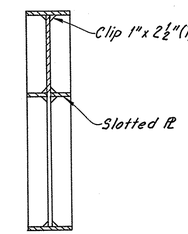

SECTION X-X

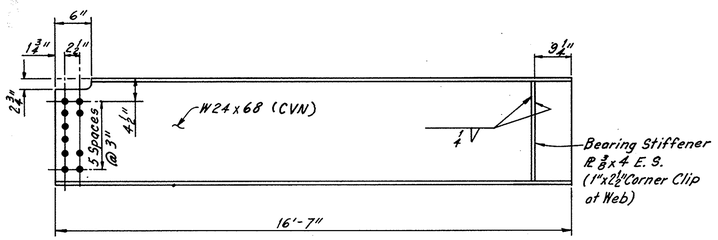

REF. NO. 1
Unit 14

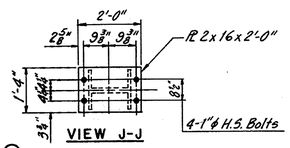

VIEW J-J

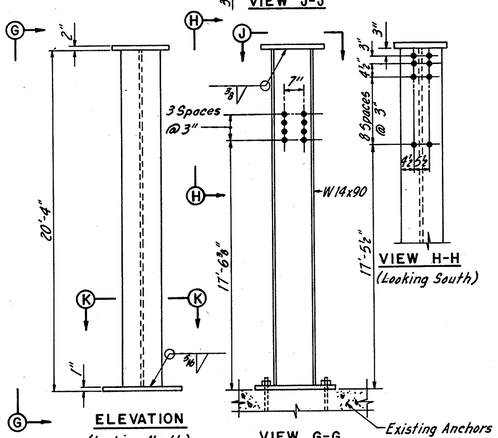

ELEVATION
(Looking North)

VIEW G-G
(Looking East)

VIEW H-H
(Looking South)

Existing Anchors & Foundation

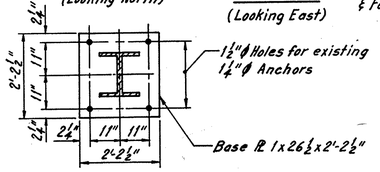

SECTION K-K

REF. NO. 4
Unit 14
(Col. U11W replace Column)

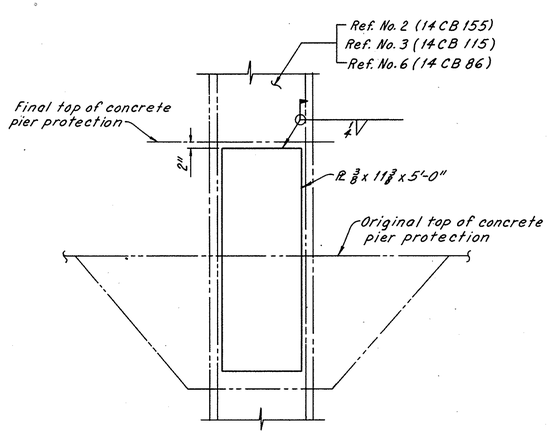

REF. NOS. 2, 3 & 6
Columns U14W, U13W & U7W Resp.
Units 14 & 15

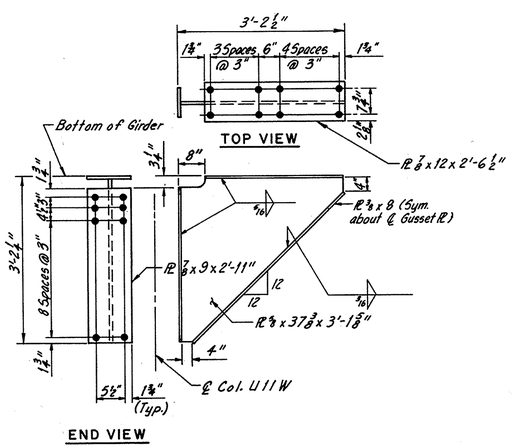

END VIEW

REF. NO. 33
Unit 14
(Looking West)

NOTES:

1. MATERIAL SHOWN PHANTOM (————————————) IN STEEL REPAIR DETAILS IS EXISTING AND TO REMAIN IN PLACE. ALL OTHER IS TO BE REMOVED AND REPLACED AS SHOWN.
2. DIMENSIONS SHOWN FOR STRUCTURAL STEEL REPAIRS AND REPLACEMENT TO EXISTING MEMBERS ARE FROM THE ORIGINAL PLANS. THE CONTRACTOR SHALL BE RESPONSIBLE FOR MAKING HIS OWN MEASUREMENT, BEFORE FABRICATING, TO INSURE THE VARIOUS PARTS OF THE WORK FIT TOGETHER WITH THE COMPLETED STRUCTURE.
3. DENOTES 7/8" Ø HIGH STRENGTH BOLTS EXCEPT AS NOTED.
4. FOR ESTIMATED STEEL REPAIR QUANTITIES SEE SHEET 58.

EUTHENICS INC.
CONSULTING ENGINEERS
CLEVELAND OHIO

REHABILITATION OF TOWER CITY BRIDGES
PROSPECT AVE., HURON ROAD,
WEST 2ND., 3RD. & 6TH. ST. VIADUCTS

STEEL REPAIR DETAILS

UNIT 14

HURON ROAD

CLEVELAND CUYAHOGA COUNTY OHIO

Made LPH	Trcd. JSC	Ckd. LJD	Rev. RAB	Revised
Date 9-15-80	Date 11-13-80	Date 7-14-82	Date 9-1-82	Sheet 72/170

FHWA REGION	STATE	PROJECT	
5	OHIO	M-ID 99(9)	

73/170

CUYAHOGA COUNTY
HURON / PROSPECT BRIDGE

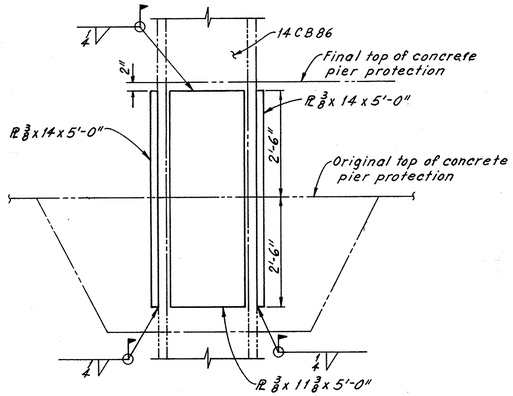

REF. NO. 5
Column U6W
Unit 15

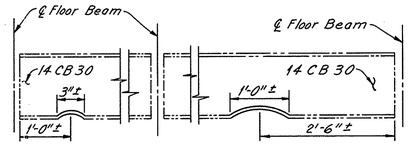

REF. NOS. 8 & 9
Looking North
Heat Straighten
Unit 15

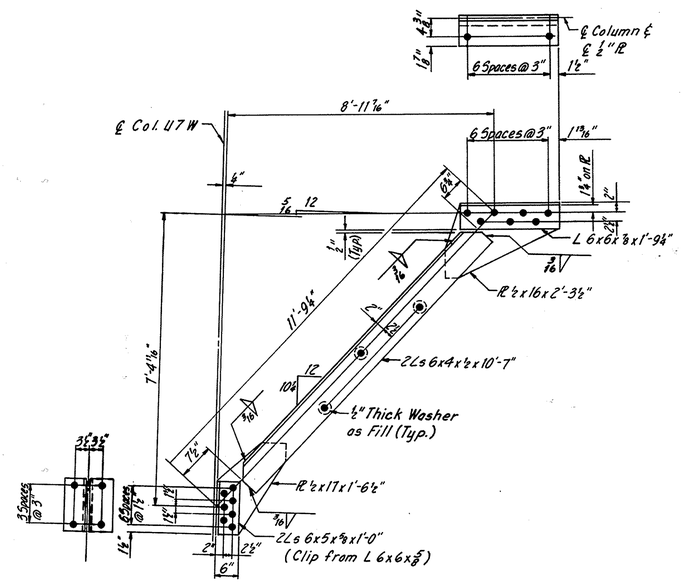

REF. NO. 29
Unit 15
(Looking North)

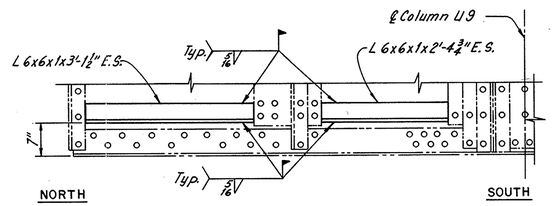

REF. NO. 10
Unit 15

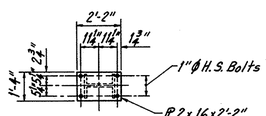

VIEW B-B

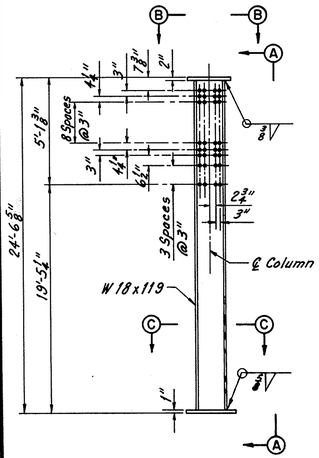

ELEVATION
(Looking West)

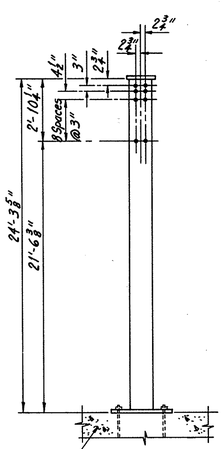

VIEW A-A
(Looking South)

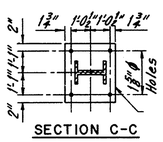

SECTION C-C

REF. NO. 7
Unit 15
(Col. U8W replace Col.)

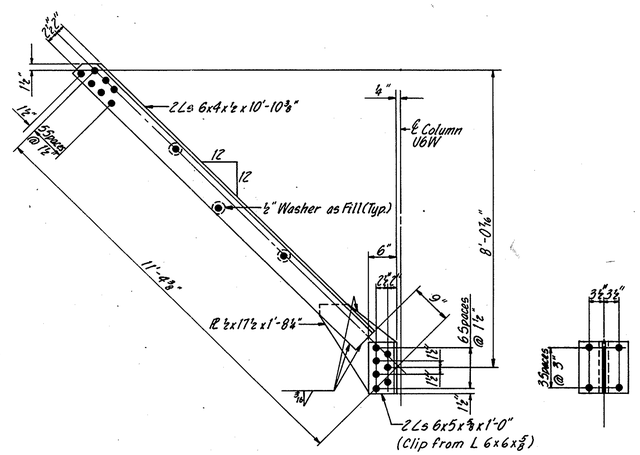

REF. NO. 27
Unit 15
(Looking South)

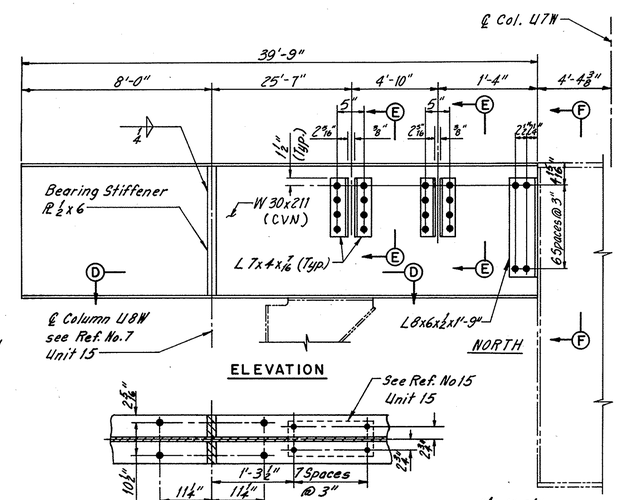

ELEVATION

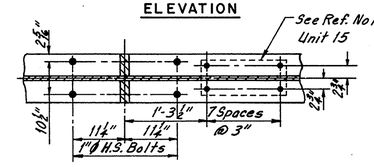

SECTION D-D

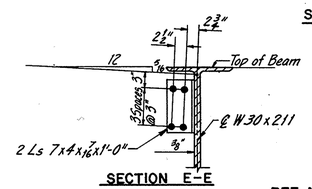

SECTION E-E

REF. NO. 30
Unit 15

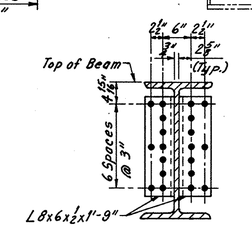

SECTION F-F

NOTES:

1. MATERIAL SHOWN PHANTOM (————————————) IN STEEL REPAIR DETAILS IS EXISTING AND TO REMAIN IN PLACE. ALL OTHER IS TO BE REMOVED AND REPLACED AS SHOWN.
2. DIMENSIONS SHOWN FOR STRUCTURAL STEEL REPAIRS AND REPLACEMENT TO EXISTING MEMBERS ARE FROM THE ORIGINAL PLANS. THE CONTRACTOR SHALL BE RESPONSIBLE FOR MAKING HIS OWN MEASUREMENT, BEFORE FABRICATING, TO INSURE THE VARIOUS PARTS OF THE WORK FIT TOGETHER WITH THE COMPLETED STRUCTURE.
3. DENOTES 7/8" Ø HIGH STRENGTH BOLTS EXCEPT AS NOTED.
4. FOR ESTIMATED STEEL REPAIR QUANTITIES SEE SHEET 58.

EUTHENICS INC.
CONSULTING ENGINEERS
CLEVELAND OHIO

REHABILITATION OF TOWER CITY BRIDGES
PROSPECT AVE., HURON ROAD,
WEST 2ND., 3RD. & 6TH. ST. VIADUCTS

STEEL REPAIR DETAILS

UNIT 15

HURON ROAD

CLEVELAND CUYAHOGA COUNTY OHIO

Mode JAB	Trcd. JSC	Ckd. LJD	Rev. RAB	Scale: No Scale
Date 4-24-78	Date 4-25-78	Date 7-19-82	Date 9-3-82	Sheet 73/170

FHWA REGION	STATE	PROJECT	
5	OHIO	M-ID 99 (9)	

CUYAHOGA COUNTY
HURON / PROSPECT BRIDGE

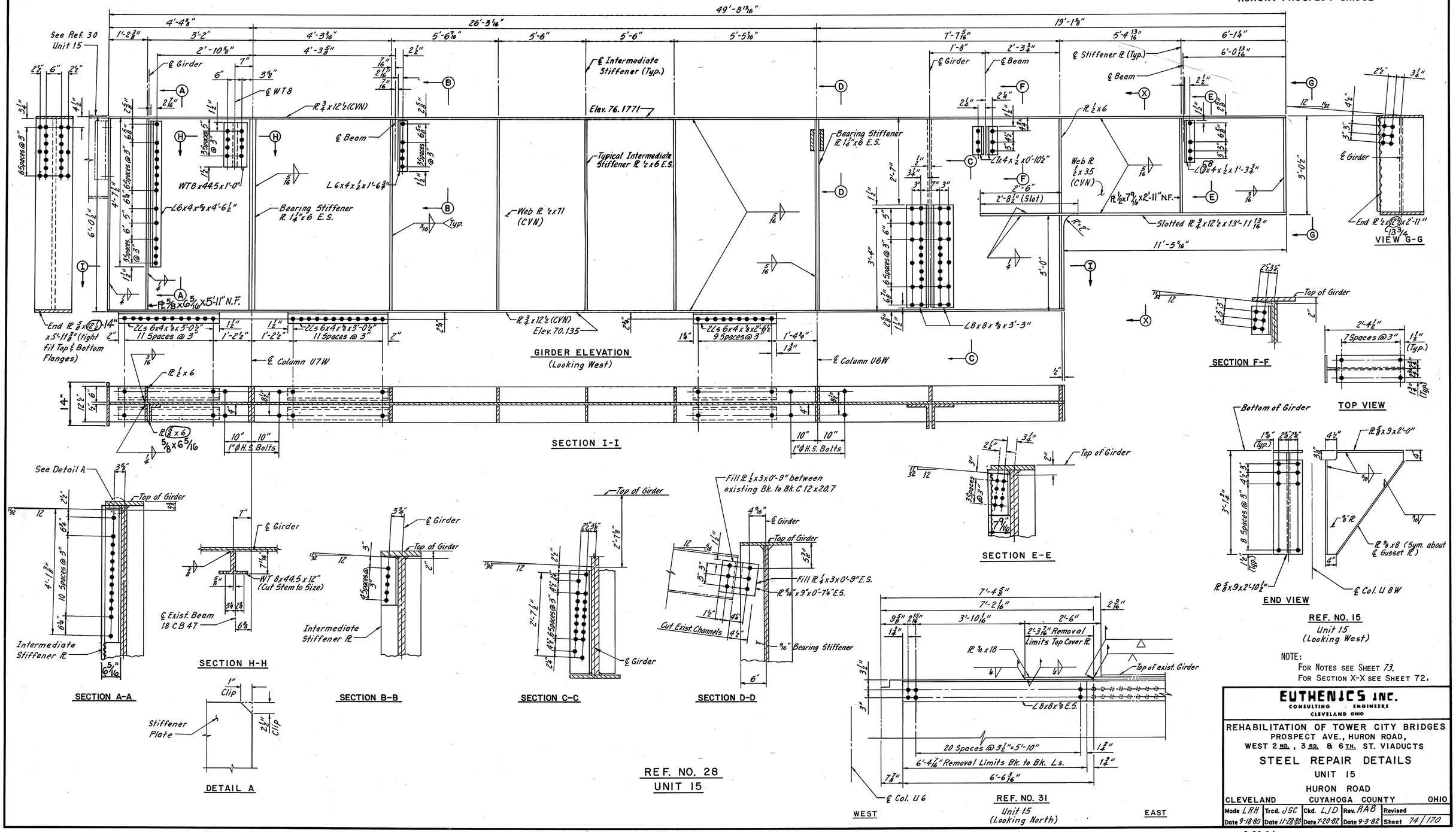

NOTE:
For Notes see Sheet 73.
For Section X-X see Sheet 72.

EUTHENICS INC.
CONSULTING ENGINEERS
CLEVELAND OHIO

REHABILITATION OF TOWER CITY BRIDGES
PROSPECT AVE., HURON ROAD,
WEST 2 ND., 3 RD. & 6 TH. ST. VIADUCTS

STEEL REPAIR DETAILS
UNIT 15
HURON ROAD
CLEVELAND CUYAHOGA COUNTY OHIO

Made LRH	Trcd. JSC	Ckd. LJD	Rev. RAB	Revised
Date 9-18-80	Date 11-28-80	Date 7-20-82	Date 9-3-82	Sheet 74/170

Rev. 3-28-84

FHWA REGION	STATE	PROJECT	
5	OHIO	M-ID 99 (9)	

75 / 170

CUYAHOGA COUNTY
HURON / PROSPECT BRIDGE

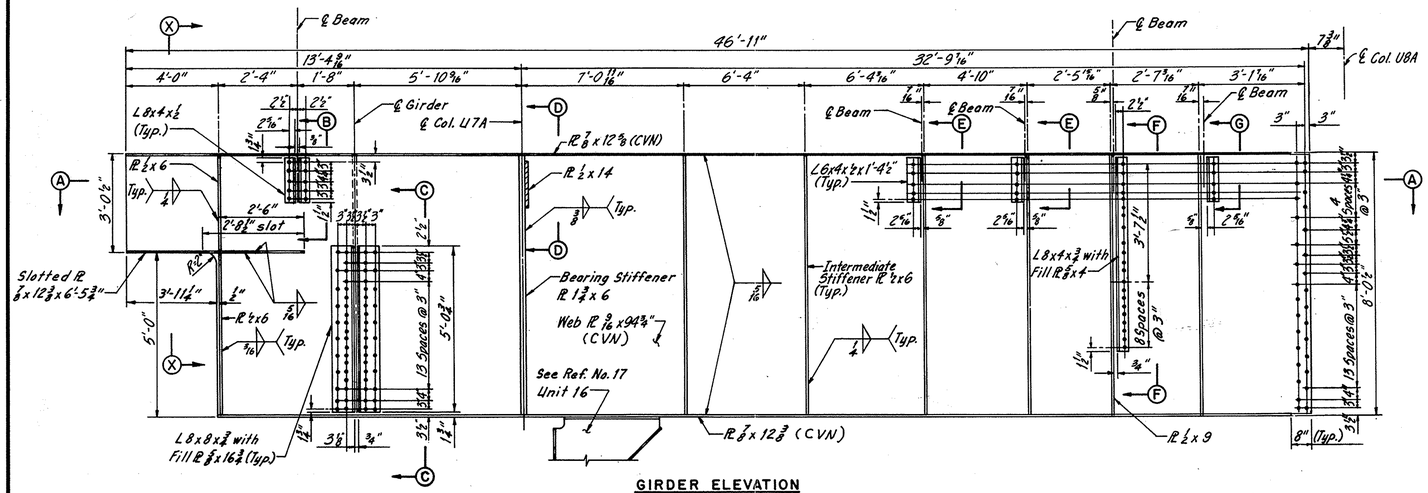

GIRDER ELEVATION
(Looking West)

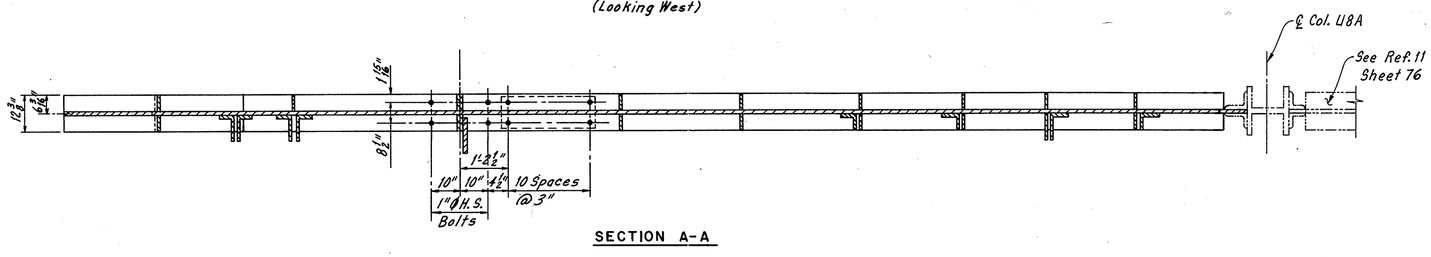

SECTION A-A
REF. NO. 16
Unit 16

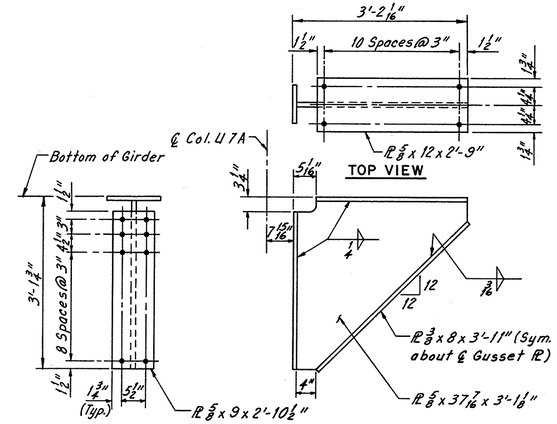

REF. NO. 17
Unit 16

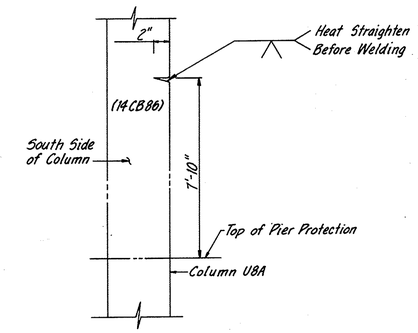

REF. NO. 35
Unit 16

NOTES:

1. MATERIAL SHOWN PHANTOM (————--————————) IN STEEL REPAIR DETAILS IS EXISTING AND TO REMAIN IN PLACE. ALL OTHER IS TO BE REMOVED AND REPLACED AS SHOWN.
2. DIMENSIONS SHOWN FOR STRUCTURAL STEEL REPAIRS AND REPLACEMENT TO EXISTING MEMBERS ARE FROM THE ORIGINAL PLANS. THE CONTRACTOR SHALL BE RESPONSIBLE FOR MAKING HIS OWN MEASUREMENT, BEFORE FABRICATING, TO INSURE THE VARIOUS PARTS OF THE WORK FIT TOGETHER WITH THE COMPLETED STRUCTURE.
3. ● DENOTES 7/8" Ø HIGH STRENGTH BOLTS EXCEPT AS NOTED.
4. FOR ESTIMATED STEEL REPAIR QUANTITIES SEE SHEET 58.
5. FOR SECTION X-X SEE SHEET 72.

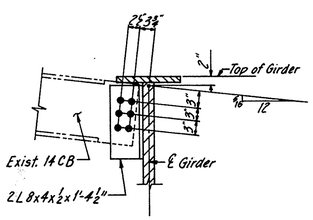

SECTION B-B

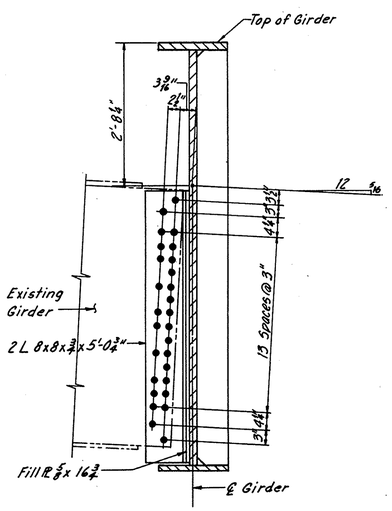

SECTION C-C

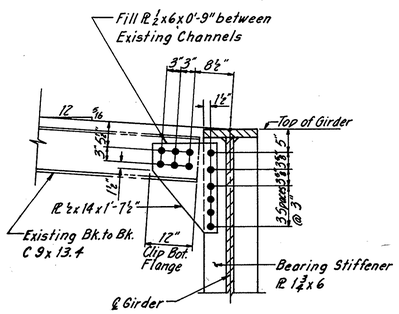

SECTION D-D

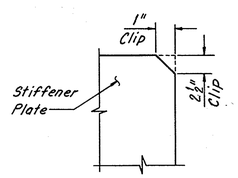

DETAIL A

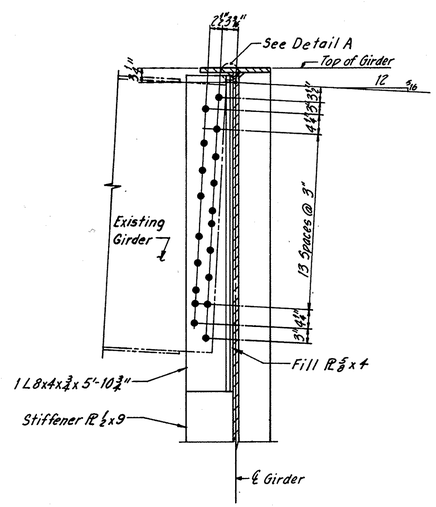

SECTION F-F

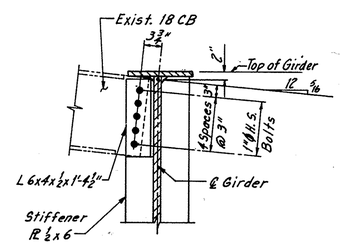

SECTION G-G
(Section E-E similar except angle is at far side)

EUTHENICS INC.
CONSULTING ENGINEERS
CLEVELAND OHIO

REHABILITATION OF TOWER CITY BRIDGES
PROSPECT AVE., HURON ROAD,
WEST 2ND., 3RD. & 6TH. ST. VIADUCTS

STEEL REPAIR DETAILS

UNIT 16

HURON ROAD

CLEVELAND CUYAHOGA COUNTY OHIO

Made LRH	Trcd. JSC	Ckd. LJD	Rev. RAB	Revised
Date 9-22-80	Date 12-15-80	Date 7-21-82	Date 9-3-82	Sheet 75 / 170

FHWA REGION	STATE	PROJECT	
5	OHIO	M-1D99(9)	

76 / 170

CUYAHOGA COUNTY
HURON / PROSPECT BRIDGE

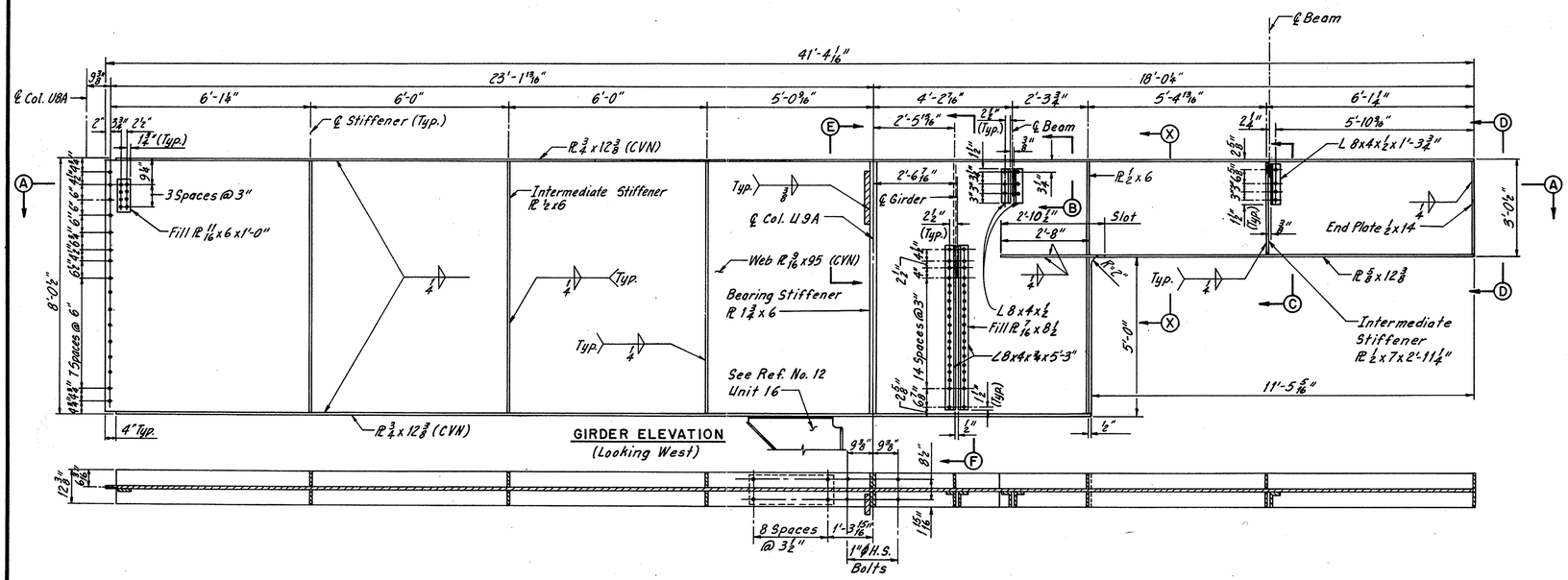

GIRDER ELEVATION
(Looking West)

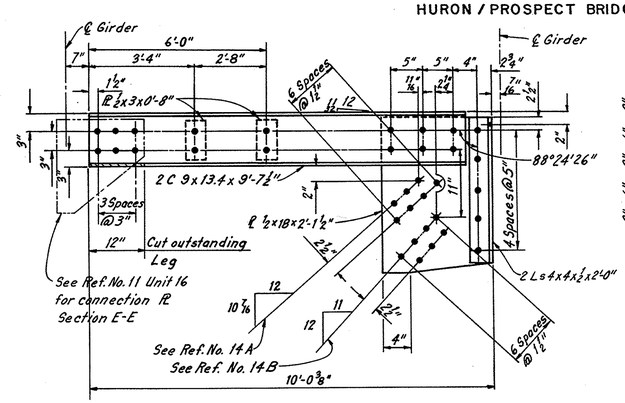

WEST — EAST

REF. NO. 14
Unit 16

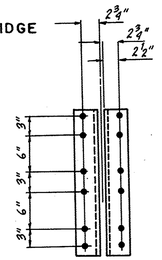

END VIEW

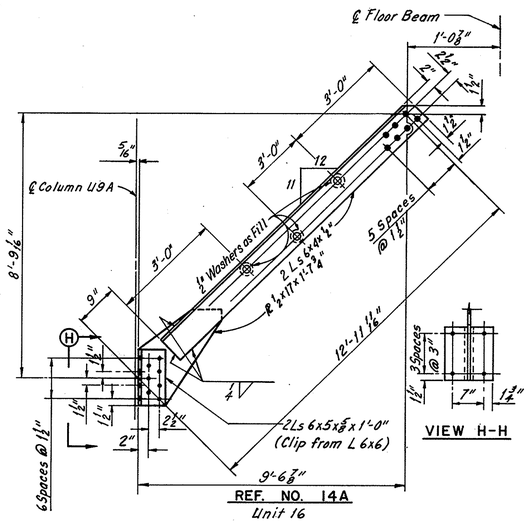

REF. NO. 14A
Unit 16

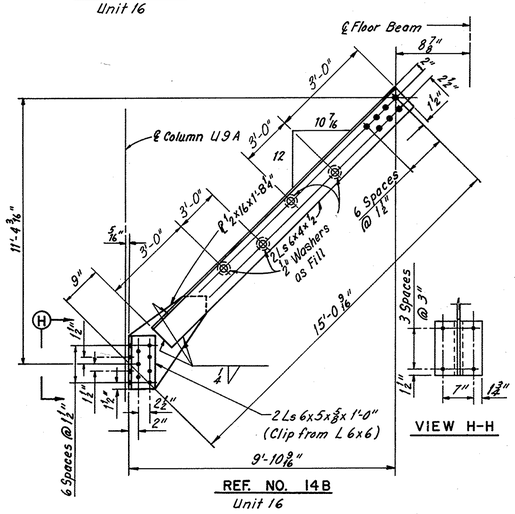

REF. NO. 14B
Unit 16

VIEW H-H

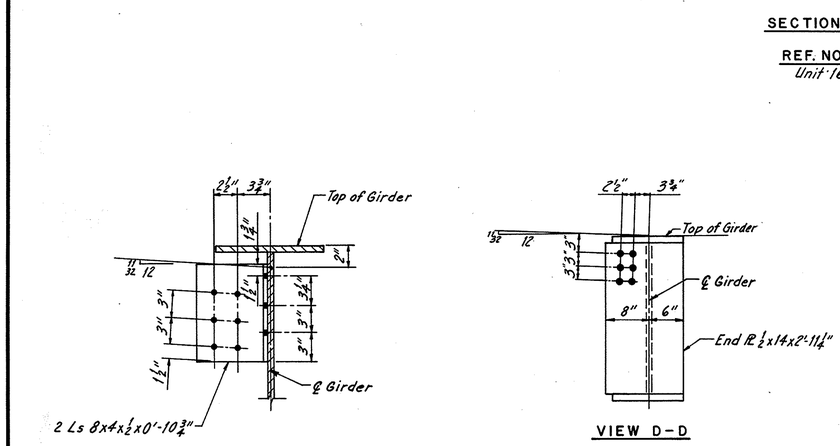

SECTION B-B

VIEW D-D

SECTION C-C

SECTION E-E

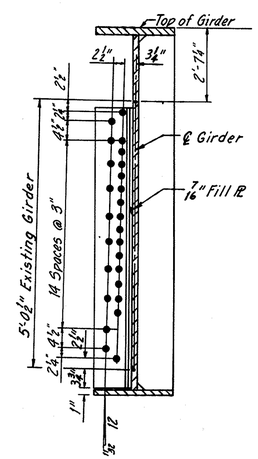

SECTION F-F

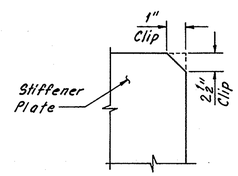

DETAIL A

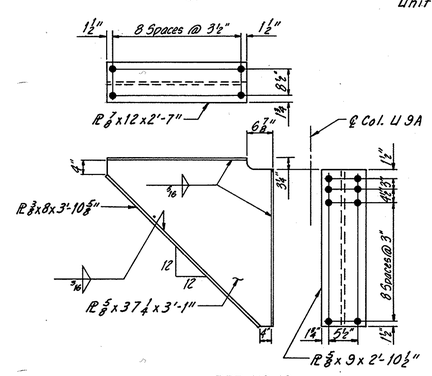

REF. NO. 12
(Looking West)
Unit 16

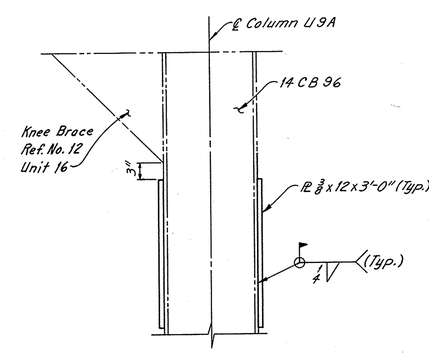

REF. NO. 13
Unit 16

NOTE:
For Notes see Sheet 73.
For Section X-X see Sheet 72.

EUTHENICS INC.
CONSULTING ENGINEERS
CLEVELAND OHIO

REHABILITATION OF TOWER CITY BRIDGES
PROSPECT AVE., HURON ROAD,
WEST 2ND., 3RD. & 6TH. ST. VIADUCTS

STEEL REPAIR DETAILS
UNIT 16
HURON ROAD
CLEVELAND — CUYAHOGA COUNTY — OHIO

Made LRH	Trcd. JSC	Ckd. LJD	Rev. RAB	Scale: No Scale
Date 4-24-78	Date 4-25-78	Date 7-23-82	Date 9-3-82	Sheet 76 / 170

FHWA REGION	STATE	PROJECT	
5	OHIO	M-ID 99 (9)	

77
170

CUYAHOGA COUNTY
HURON / PROSPECT BRIDGE

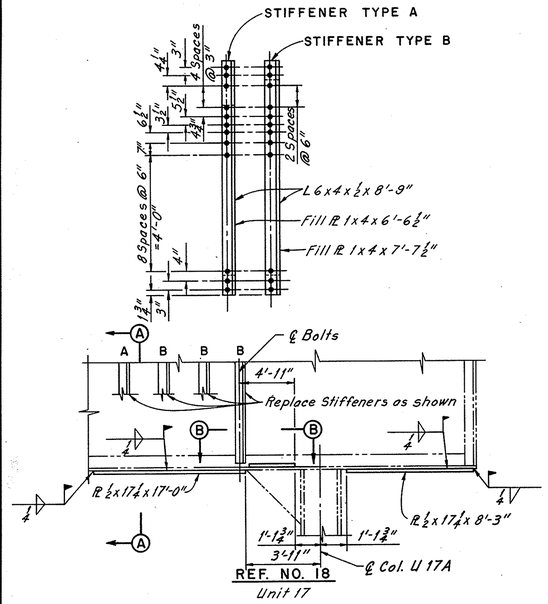

REF. NO. 18
Unit 17

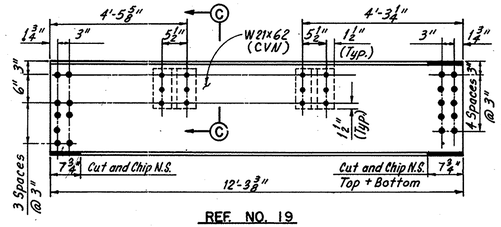

REF. NO. 19
Unit 17

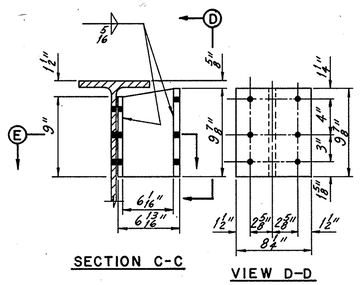

SECTION C-C

VIEW D-D

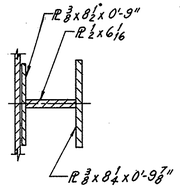

SECTION E-E

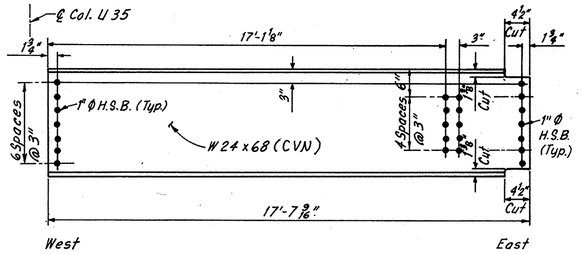

REF. NO. 4
Unit 18

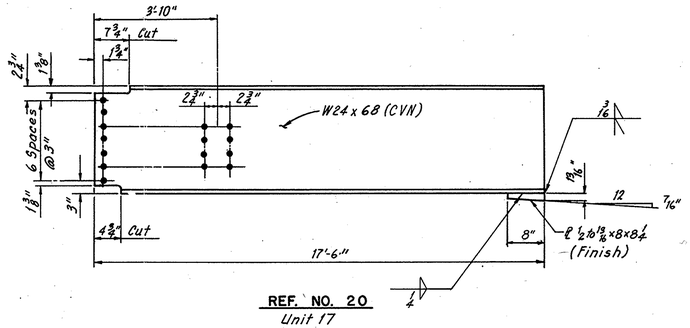

REF. NO. 20
Unit 17

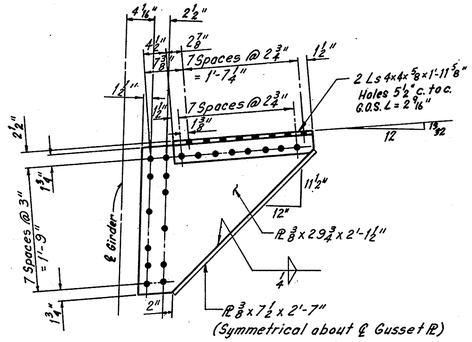

REF. NO. 1
Unit 18
(2 Braces - 1 each side of Column U 29)

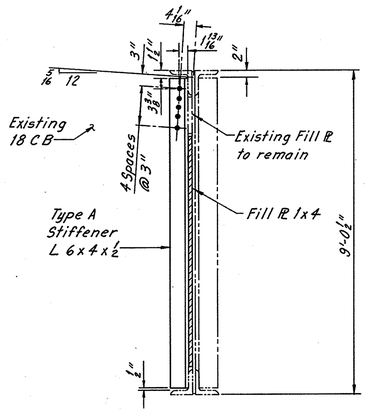

SECTION A-A

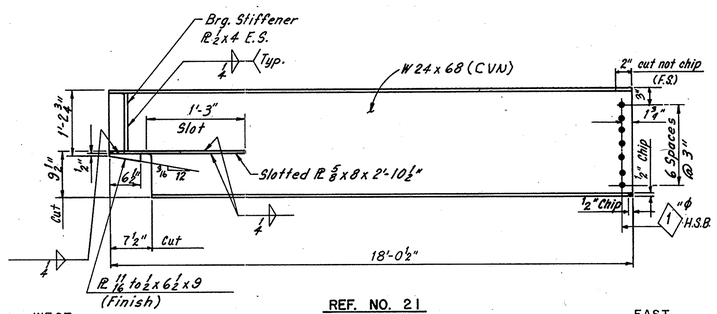

REF. NO. 21
Unit 17

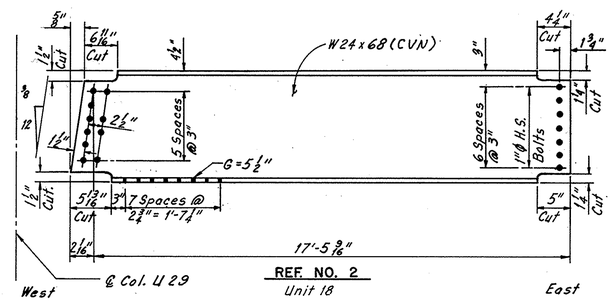

REF. NO. 2
Unit 18

NOTES:

1. MATERIAL SHOWN PHANTOM (————————) IN STEEL REPAIR DETAILS IS EXISTING AND TO REMAIN IN PLACE. ALL OTHER IS TO BE REMOVED AND REPLACED AS SHOWN.
2. DIMENSIONS SHOWN FOR STRUCTURAL STEEL REPAIRS AND REPLACEMENT TO EXISTING MEMBERS ARE FROM THE ORIGINAL PLANS. THE CONTRACTOR SHALL BE RESPONSIBLE FOR MAKING HIS OWN MEASUREMENT, BEFORE FABRICATING, TO INSURE THE VARIOUS PARTS OF THE WORK FIT TOGETHER WITH THE COMPLETED STRUCTURE.
3. ● DENOTES 7/8" Ø HIGH STRENGTH BOLTS EXCEPT AS NOTED.
4. FOR ESTIMATED STEEL REPAIR QUANTITIES SEE SHEETS 58 & 59.

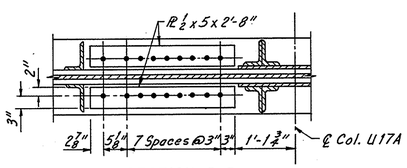

SECTION B-B
Note: Use existing rivit holes.

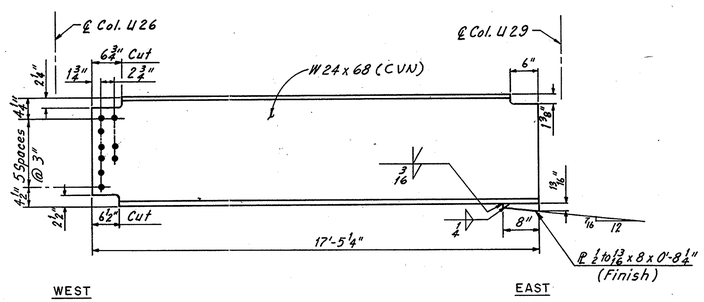

REF. NO. 22
Unit 17

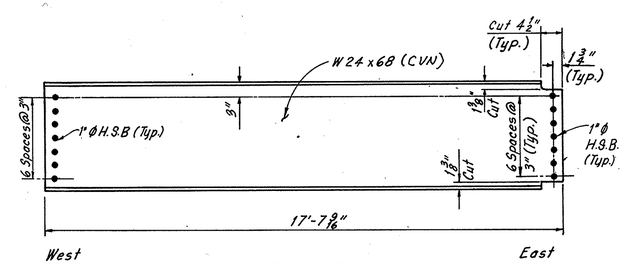

REF. NO. 3
Unit 18

EUTHENICS INC.
CONSULTING ENGINEERS
CLEVELAND OHIO

REHABILITATION OF TOWER CITY BRIDGES
PROSPECT AVE., HURON ROAD,
WEST 2ND., 3RD. & 6TH. ST. VIADUCTS

STEEL REPAIR DETAILS
UNITS 17 & 18

HURON ROAD
CLEVELAND CUYAHOGA COUNTY OHIO

Mode LRH	Trcd. JSC	Ckd. LJD	Rev. RAB	Scale: No Scale
Date 9-29-80	Date 12-19-80	Date 7-26-82	Date 9-3-82	Sheet 77/170

FHWA REGION	STATE	PROJECT	
5	OHIO	M-ID 99 (9)	

78 / 170

CUYAHOGA COUNTY
HURON / PROSPECT BRIDGE

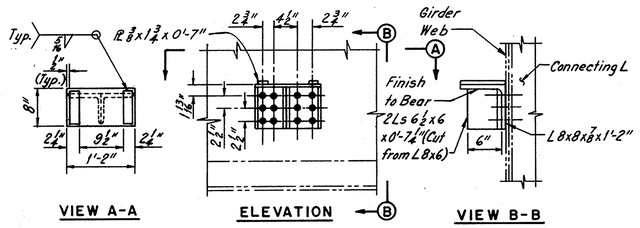

REF. NO. 5
Unit 19
(Beam Seat for Ref. No. 6)

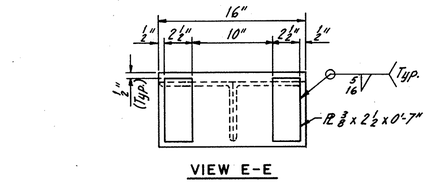

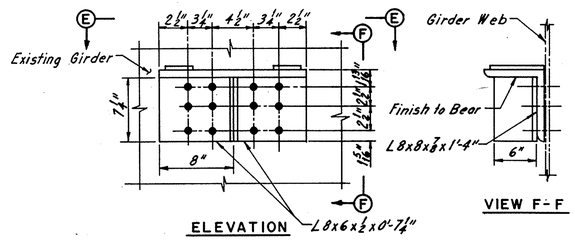

REF. NO. 9
Unit 19

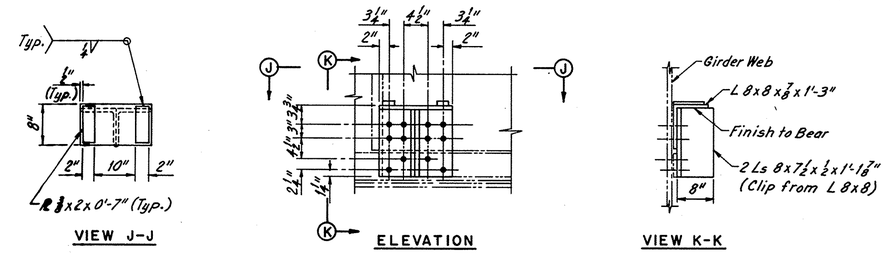

REF. NO. 14
Unit 20

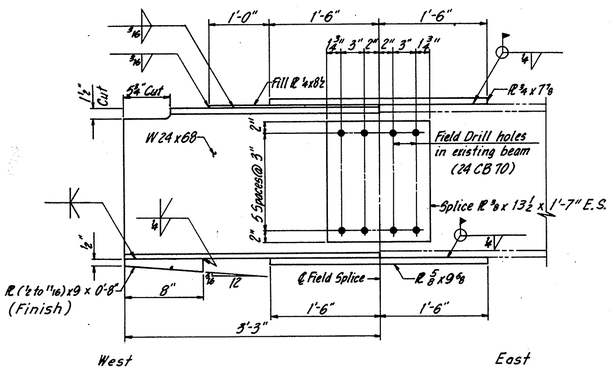

REF. NO. 6
Unit 19

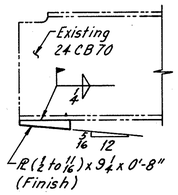

REF. NO. 10
Unit 19

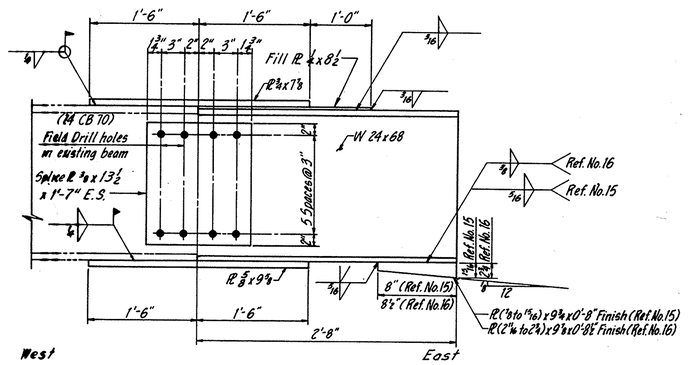

REF. NOS. 15 & 16
Unit 20

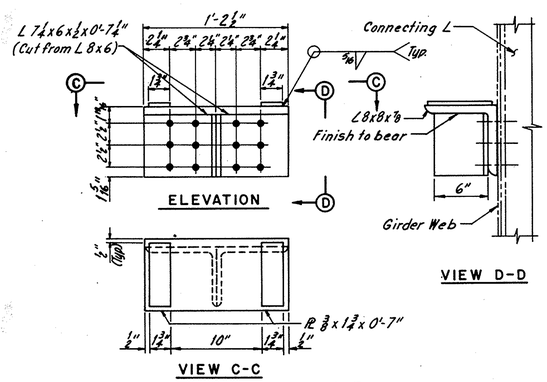

REF. NO. 7
Unit 19

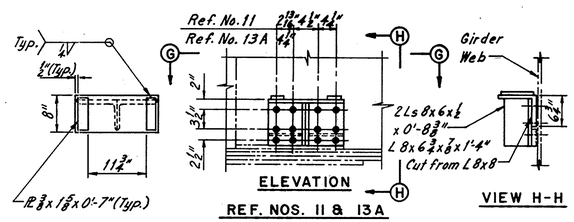

REF. NOS. 11 & 13A
Unit 20
(Beam Seats for Ref. No. 12 & Ref. No. 13 resp.)

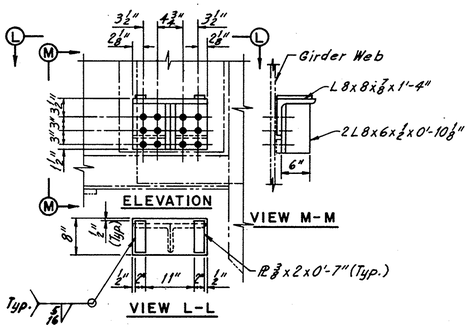

REF. NO. 17
Unit 20

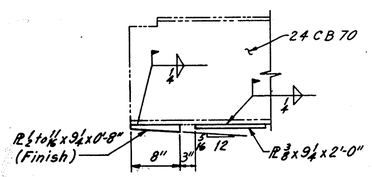

REF. NO. 8
Unit 19

Note: Bevel Sliding Plate to be welded onto existing beam before new beam seat is bolted in place. For beam seat see Ref. No. 7.

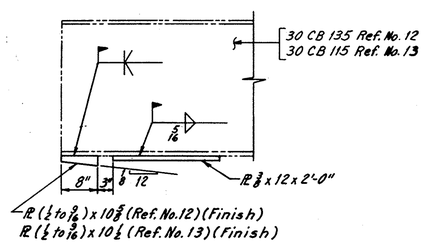

REF. NOS. 12 & 13
Unit 20

NOTES:

1. MATERIAL SHOWN PHANTOM (————————————) IN STEEL REPAIR DETAILS IS EXISTING AND TO REMAIN IN PLACE. ALL OTHER IS TO BE REMOVED AND REPLACED AS SHOWN.
2. DIMENSIONS SHOWN FOR STRUCTURAL STEEL REPAIRS AND REPLACEMENT TO EXISTING MEMBERS ARE FROM THE ORIGINAL PLANS. THE CONTRACTOR SHALL BE RESPONSIBLE FOR MAKING HIS OWN MEASUREMENT, BEFORE FABRICATING, TO INSURE THE VARIOUS PARTS OF THE WORK FIT TOGETHER WITH THE COMPLETED STRUCTURE.
3. ● DENOTES 7/8" Ø HIGH STRENGTH BOLTS EXCEPT AS NOTED.
4. FOR ESTIMATED STEEL REPAIR QUANTITIES SEE SHEET 59.

EUTHENICS INC.
CONSULTING ENGINEERS
CLEVELAND OHIO

REHABILITATION OF TOWER CITY BRIDGES
PROSPECT AVE., HURON ROAD,
WEST 2ND., 3RD. & 6TH. ST. VIADUCTS

STEEL REPAIR DETAILS
UNITS 19 & 20

HURON ROAD
CLEVELAND CUYAHOGA COUNTY OHIO

Made LRH	Trcd. JSC	Chd. LJD	Rev. RAB	Scale: No Scale
Date 9-30-80	Date 12-22-80	Date 7-26-82	Date 9-3-82	Sheet 78 / 170

FHWA REGION	STATE	PROJECT	
5	OHIO	M-ID 99 (9)	

79/170

CUYAHOGA COUNTY
HURON/ PROSPECT BRIDGE

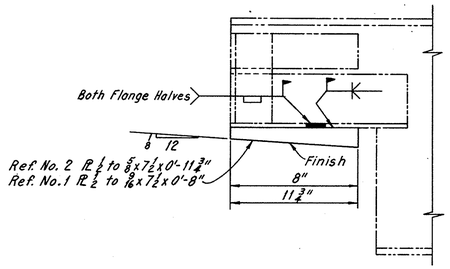

REF. NOS. 1 & 2
Unit 22

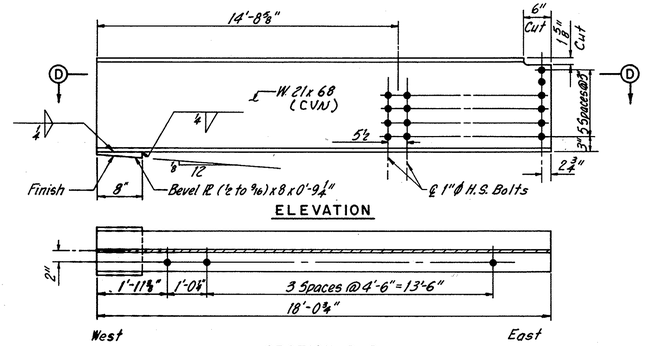

ELEVATION

SECTION D-D

REF. NO. 8
Unit 23

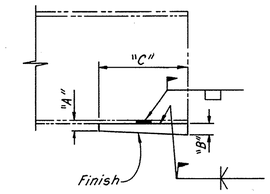

UNIT NO.	REF. NO.	PLATE SIZE (INCHES) "A"	"B"	"C"	WIDTH
23	3	9/16	1/2	6	9
23	4	9/16	1/2	6	9
23	10A	9/16	1/2	8	9
23	10	9/16	1/2	8	9
24	12	9/16	1/2	8	10
24	13	9/16	1/2	8	12
25	14	9/16	1/2	8	9 3/4
25	15	9/16	1/2	8	9 3/4
27	1	1/2	9/16	8	9 3/4
27	2	1/2	9/16	8	10 1/2

TYPICAL BEARING PLATE REPLACEMENT DETAIL

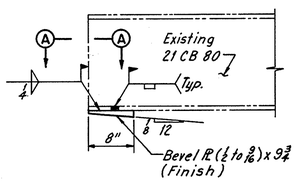

ELEVATION

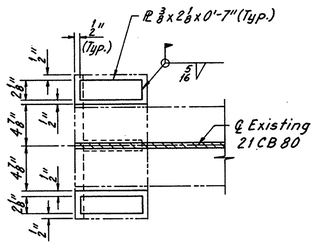

SECTION A-A

REF. NO. 5
Unit 23

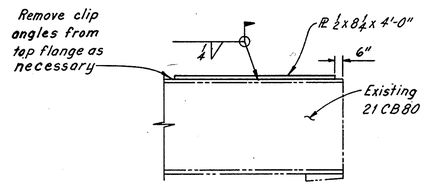

REF. NO. 9
Unit 23

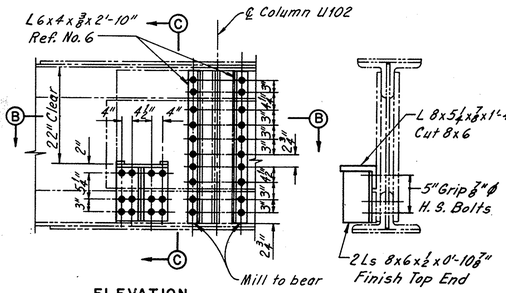

ELEVATION

SECTION C-C
Ref. No. 7

REF. NOS. 6 & 7
Unit 23

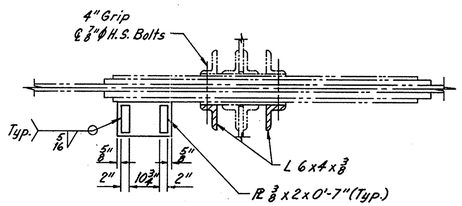

SECTION B-B

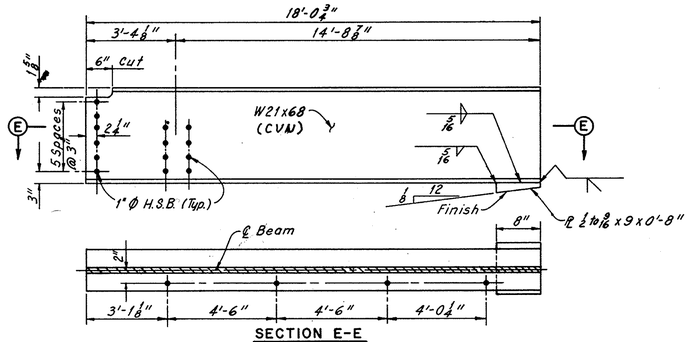

SECTION E-E

REF. NO. 11
Unit 23

NOTES:

1. MATERIAL SHOWN PHANTOM (————--————--————) IN STEEL REPAIR DETAILS IS EXISTING AND TO REMAIN IN PLACE. ALL OTHER IS TO BE REMOVED AND REPLACED AS SHOWN.
2. DIMENSIONS SHOWN FOR STRUCTURAL STEEL REPAIRS AND REPLACEMENT TO EXISTING MEMBERS ARE FROM THE ORIGINAL PLANS. THE CONTRACTOR SHALL BE RESPONSIBLE FOR MAKING HIS OWN MEASUREMENT, BEFORE FABRICATING, TO INSURE THE VARIOUS PARTS OF THE WORK FIT TOGETHER WITH THE COMPLETED STRUCTURE.
3. ● DENOTES 7/8" Ø HIGH STRENGTH BOLTS EXCEPT AS NOTED.
4. FOR ESTIMATED STEEL REPAIR QUANTITIES SEE SHEETS 60 & 61.

EUTHENICS INC.
CONSULTING ENGINEERS
CLEVELAND OHIO

REHABILITATION OF TOWER CITY BRIDGES
PROSPECT AVE., HURON ROAD,
WEST 2ND., 3RD. & 6TH. ST. VIADUCTS

STEEL REPAIR DETAILS
UNITS 22 — 27
HURON ROAD

CLEVELAND CUYAHOGA COUNTY OHIO

Mode LRH	Trcd. JSC	Ckd. LJD	Rev. RAB	Scale: No Scale
Date 10-3-80	Date 12-29-80	Date 7-28-82	Date 9-7-82	Sheet 79/170

FHWA REGION	STATE	PROJECT	
5	OHIO	M-ID 99 (9)	

80 / 170

CUYAHOGA COUNTY
HURON/ PROSPECT BRIDGE

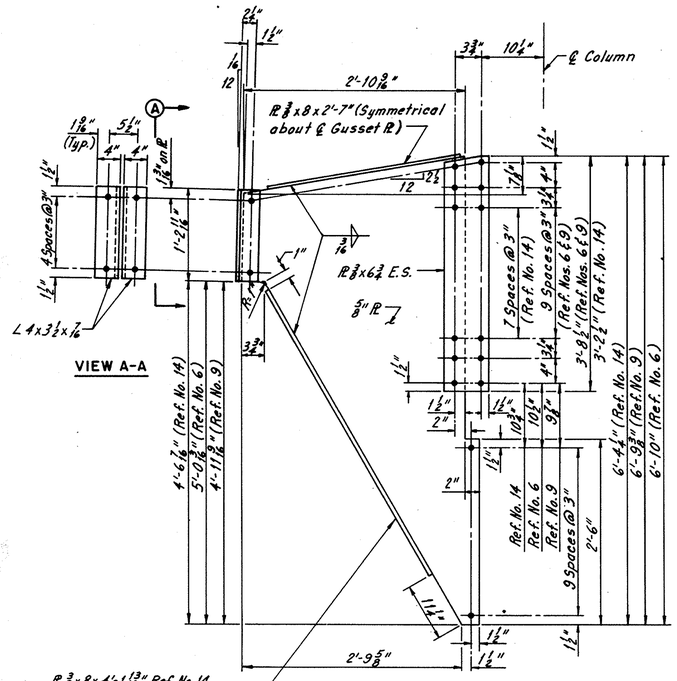

VIEW A-A

ELEVATION
REF. NO. 6 (Unit 27)
REF. NO. 9 & 14 (Unit 28)

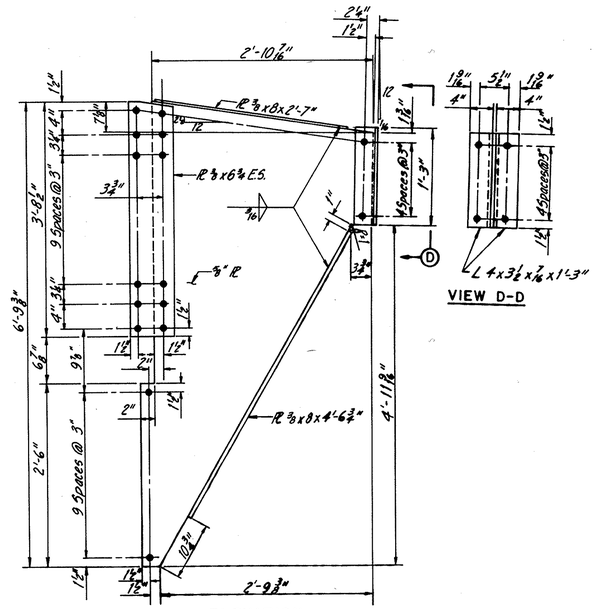

VIEW D-D

ELEVATION
REF. NO. 10
Unit 28

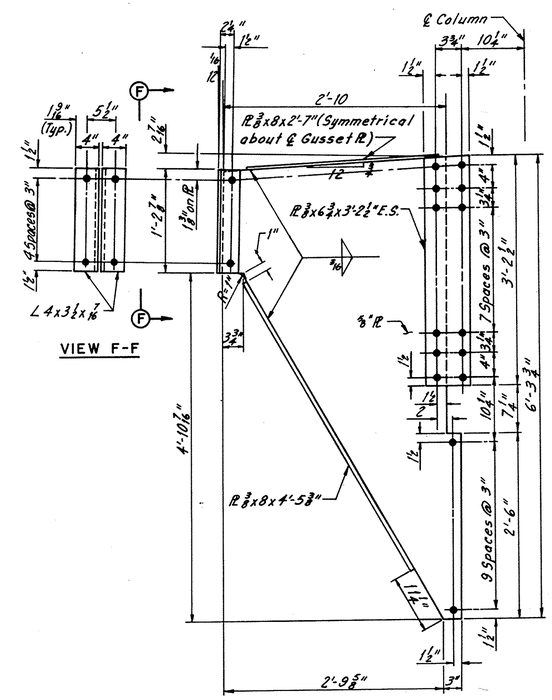

VIEW F-F

ELEVATION
REF. NO. 13
Unit 28

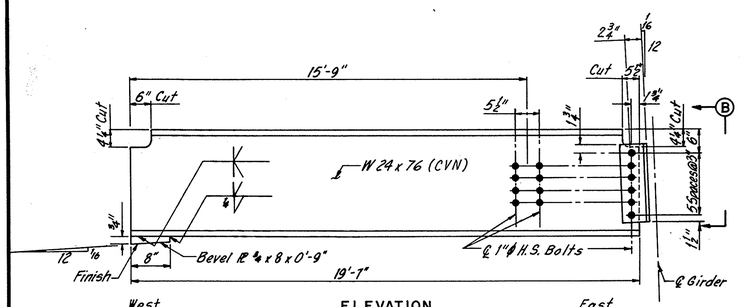

ELEVATION
REF. NO. 7
Unit 28

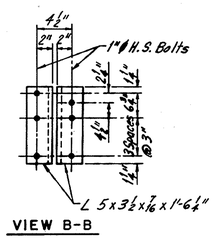

VIEW B-B

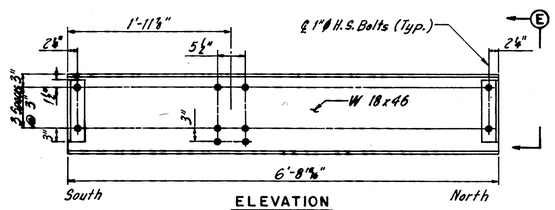

ELEVATION
REF. NO. 11
Unit 28

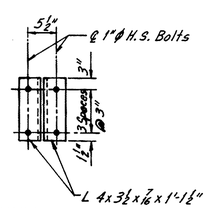

VIEW E-E
(Typical Both Ends)

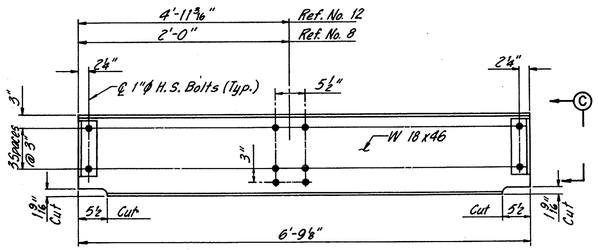

ELEVATION
REF. NOS. 8 & 12
Unit 28

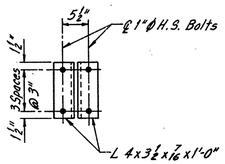

VIEW C-C
(Typical Both Ends)

NOTES:

1. MATERIAL SHOWN PHANTOM (————————) IN STEEL REPAIR DETAILS IS EXISTING AND TO REMAIN IN PLACE. ALL OTHER IS TO BE REMOVED AND REPLACED AS SHOWN.
2. DIMENSIONS SHOWN FOR STRUCTURAL STEEL REPAIRS AND REPLACEMENT TO EXISTING MEMBERS ARE FROM THE ORIGINAL PLANS. THE CONTRACTOR SHALL BE RESPONSIBLE FOR MAKING HIS OWN MEASUREMENT, BEFORE FABRICATING, TO INSURE THE VARIOUS PARTS OF THE WORK FIT TOGETHER WITH THE COMPLETED STRUCTURE.
3. ● DENOTES 7/8" Ø HIGH STRENGTH BOLTS EXCEPT AS NOTED.
4. FOR ESTIMATED STEEL REPAIR QUANTITIES SEE SHEET 61.

EUTHENICS INC.
CONSULTING ENGINEERS
CLEVELAND OHIO

REHABILITATION OF TOWER CITY BRIDGES
PROSPECT AVE., HURON ROAD,
WEST 2 ND., 3 RD. & 6 TH. ST. VIADUCTS

STEEL REPAIR DETAILS
UNITS 27 & 28
HURON ROAD

CLEVELAND CUYAHOGA COUNTY OHIO

Made LRH	Trcd. JSC	Ckd. LJD	Rev. RAB	Revised
Date 8-5-81	Date 9-1-81	Date 7-29-82	Date 9-7-82	Sheet 80 / 170

FHWA REGION	STATE	PROJECT	
5	OHIO	M-1D 99 (9)	

81 / 170

CUYAHOGA COUNTY
HURON / PROSPECT BRIDGE

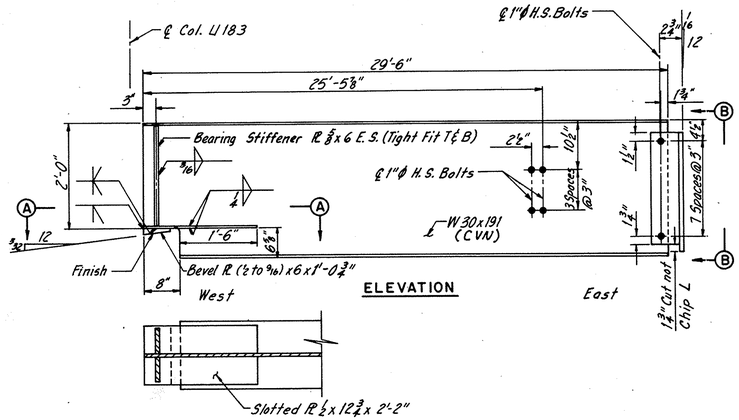

ELEVATION

SECTION A-A

REF. NO. 15
Unit 29

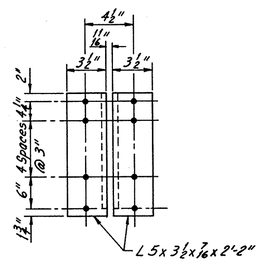

VIEW B-B

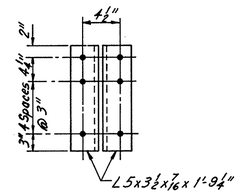

VIEW G-G

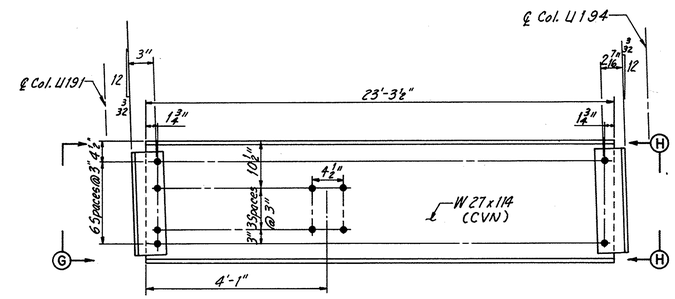

ELEVATION

REF. NO. 18
Unit 29
(Note: All Bolts 1"ϕ H.S.)

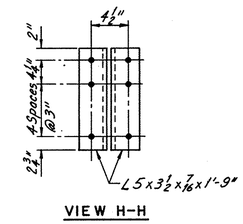

VIEW H-H

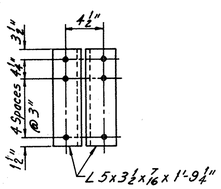

VIEW C-C

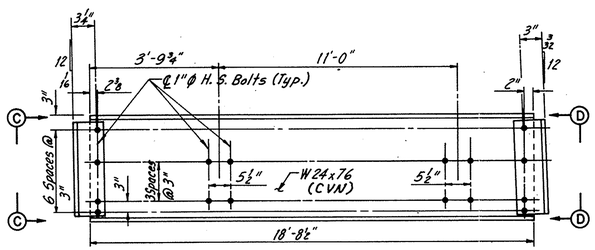

ELEVATION

REF. NO. 16
Unit 29

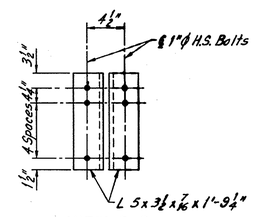

VIEW D-D

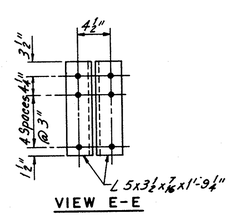

VIEW E-E

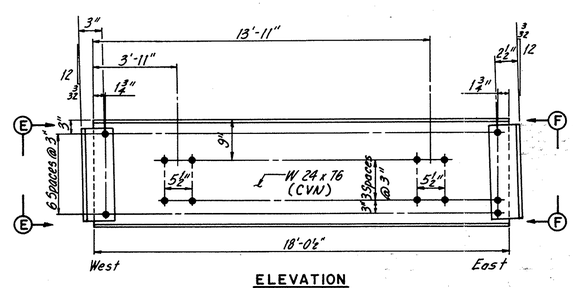

ELEVATION

REF. NO. 17
Unit 29
(Note: All Bolts 1"ϕ H.S.)

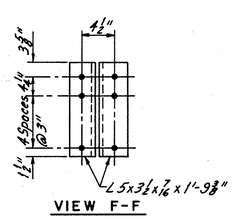

VIEW F-F

NOTES:

1. MATERIAL SHOWN PHANTOM (————————) IN STEEL REPAIR DETAILS IS EXISTING AND TO REMAIN IN PLACE. ALL OTHER IS TO BE REMOVED AND REPLACED AS SHOWN.
2. DIMENSIONS SHOWN FOR STRUCTURAL STEEL REPAIRS AND REPLACEMENT TO EXISTING MEMBERS ARE FROM THE ORIGINAL PLANS. THE CONTRACTOR SHALL BE RESPONSIBLE FOR MAKING HIS OWN MEASUREMENT, BEFORE FABRICATING, TO INSURE THE VARIOUS PARTS OF THE WORK FIT TOGETHER WITH THE COMPLETED STRUCTURE.
3. ● DENOTES 7/8" Ø HIGH STRENGTH BOLTS EXCEPT AS NOTED.
4. FOR ESTIMATED STEEL REPAIR QUANTITIES SEE SHEET 61.

EUTHENICS INC.
CONSULTING ENGINEERS
CLEVELAND OHIO

REHABILITATION OF TOWER CITY BRIDGES
PROSPECT AVE., HURON ROAD,
WEST 2ND., 3RD. & 6TH. ST. VIADUCTS

STEEL REPAIR DETAILS

UNIT 29
HURON ROAD
CLEVELAND CUYAHOGA COUNTY OHIO

Mode LRH	Trcd. JSC	Ckd. LJD	Rev. RAB	Revised
Date 8-7-81	Date 9-3-81	Date 7-30-82	Date 9-7-82	Sheet 81 / 170

FHWA REGION	STATE	PROJECT	
5	OHIO	M-1D 99 (9)	

CUYAHOGA COUNTY
HURON/ PROSPECT BRIDGE

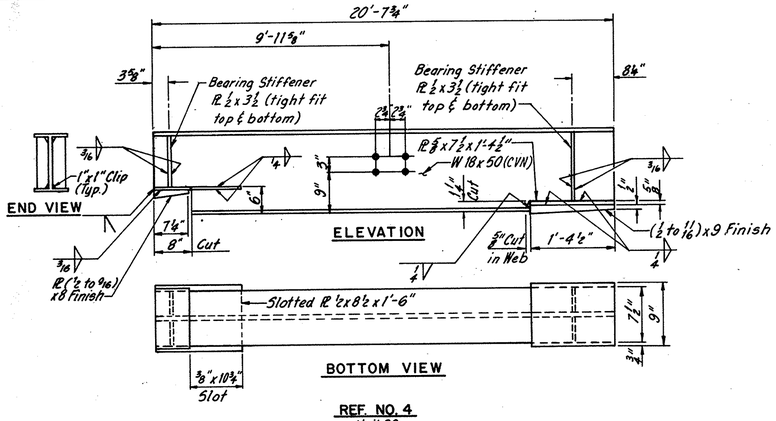

REF. NO. 4
Unit 30

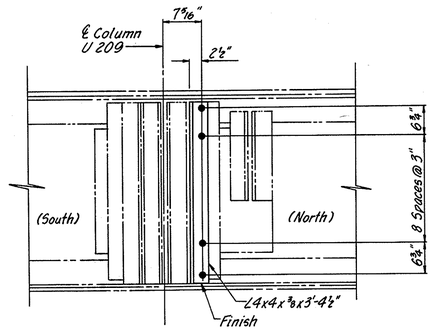

REF. NO. 9
Unit 30

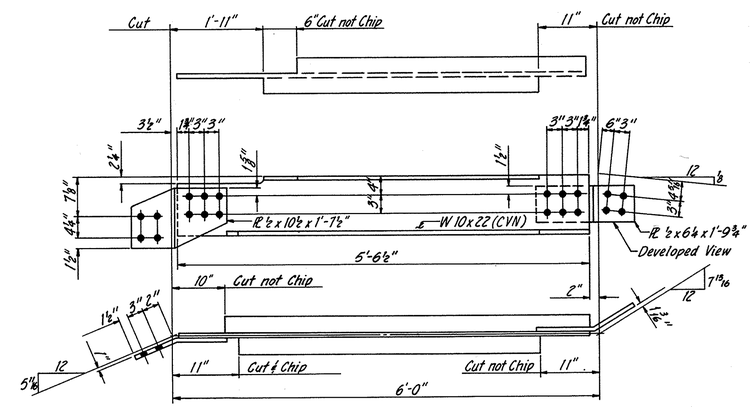

REF. NO. 17
Unit 30
(Looking North East)

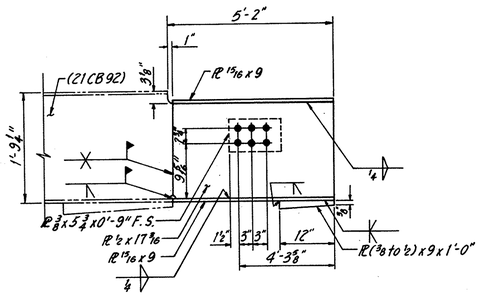

REF. NO. 5
Unit 30

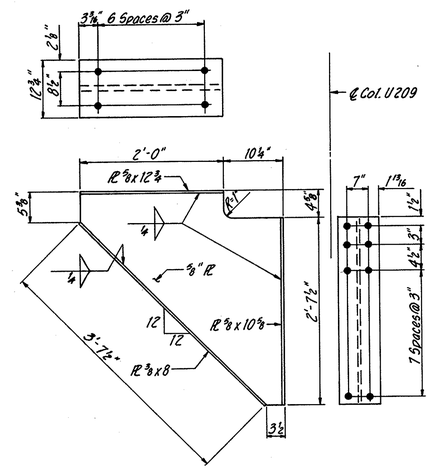

REF. NO. 10
Unit 30

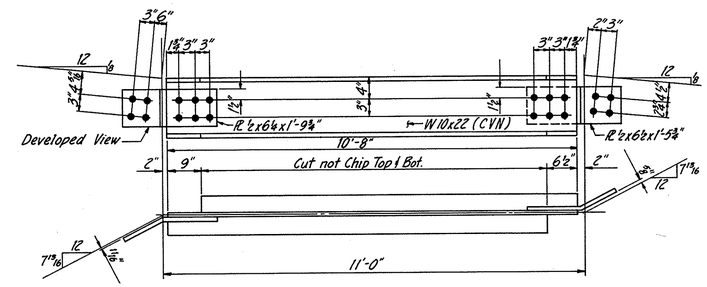

REF. NO. 18
Unit 30
(Looking North East)

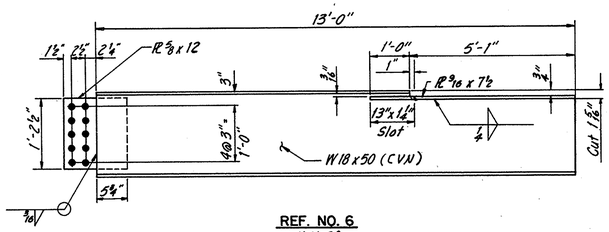

REF. NO. 6
Unit 30

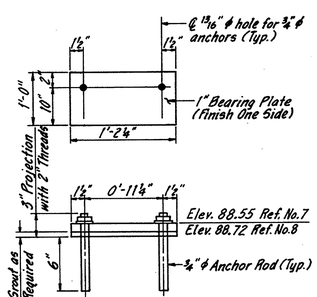

REF. NO. 7 & 8
Unit 30

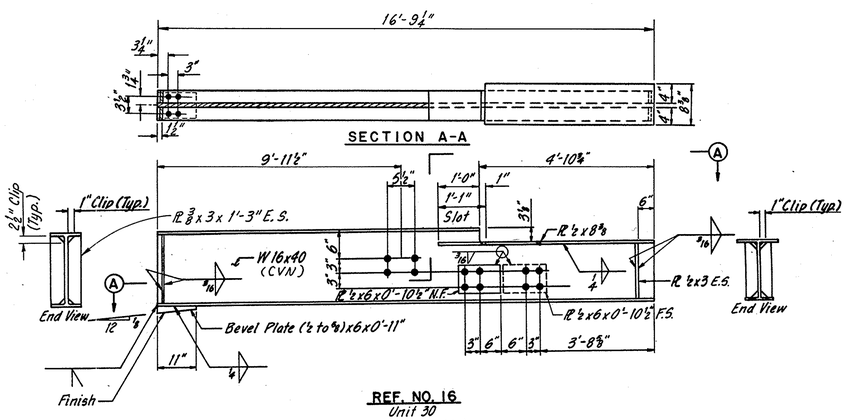

REF. NO. 16
Unit 30
(Looking North)

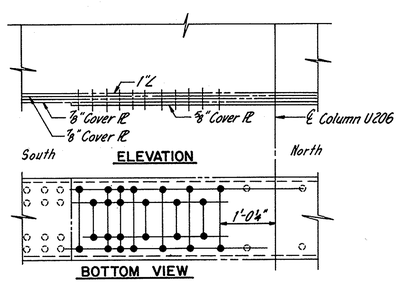

REF. NO. 23
Unit 30
Note: Remove existing rivets. Replace with 1" ϕ High Strength Bolts with washers.

NOTES:

1. MATERIAL SHOWN PHANTOM (————— - - - - - - - - - -) IN STEEL REPAIR DETAILS IS EXISTING AND TO REMAIN IN PLACE. ALL OTHER IS TO BE REMOVED AND REPLACED AS SHOWN.
2. DIMENSIONS SHOWN FOR STRUCTURAL STEEL REPAIRS AND REPLACEMENT TO EXISTING MEMBERS ARE FROM THE ORIGINAL PLANS. THE CONTRACTOR SHALL BE RESPONSIBLE FOR MAKING HIS OWN MEASUREMENT, BEFORE FABRICATING, TO INSURE THE VARIOUS PARTS OF THE WORK FIT TOGETHER WITH THE COMPLETED STRUCTURE.
3. ● DENOTES 7/8" Ø HIGH STRENGTH BOLTS EXCEPT AS NOTED.
4. FOR ESTIMATED STEEL REPAIR QUANTITIES SEE SHEET 62.

EUTHENICS INC.
CONSULTING ENGINEERS
CLEVELAND OHIO

REHABILITATION OF TOWER CITY BRIDGES
PROSPECT AVE., HURON ROAD,
WEST 2 ND., 3 RD. & 6 TH. ST. VIADUCTS

STEEL REPAIR DETAILS
UNIT 30

HURON ROAD

CLEVELAND CUYAHOGA COUNTY OHIO

Made LRH	Trcd. JSC	Ckd. LJD	Rev. RAB	Revised
Date 8-12-81	Date 9-10-81	Date 8-2-82	Date 9-7-82	Sheet 82 / 170

FHWA REGION	STATE	PROJECT	
5	OHIO	M-ID 99(9)	

83/170

CUYAHOGA COUNTY
HURON/ PROSPECT BRIDGE

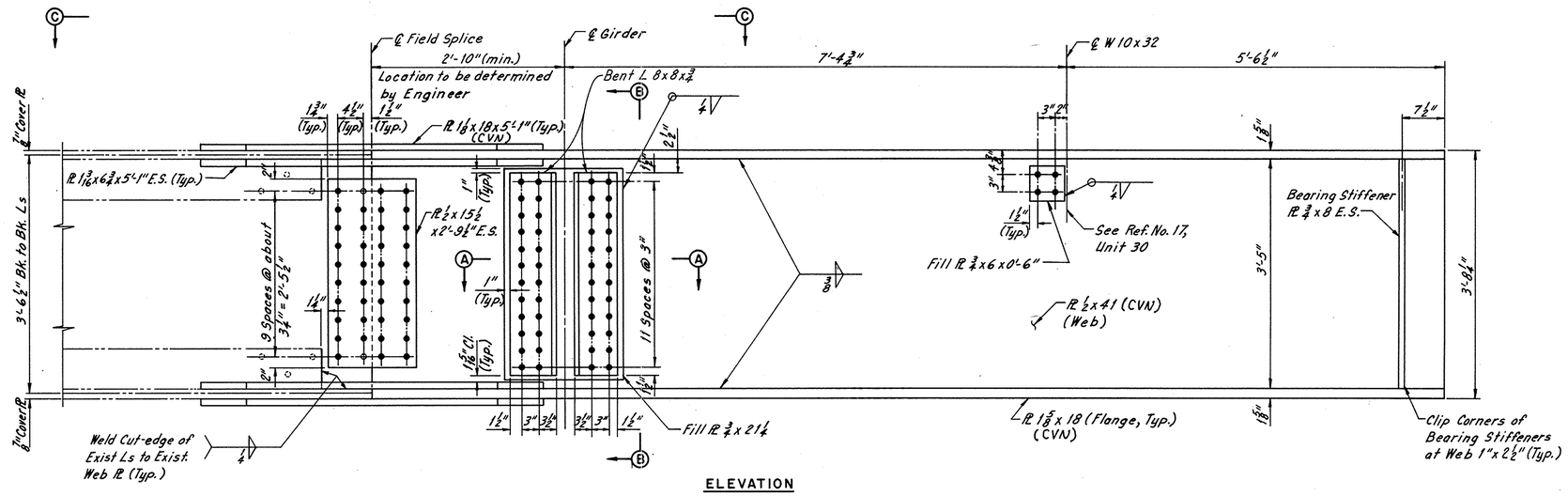

ELEVATION

REF. NO. 24
Unit 30

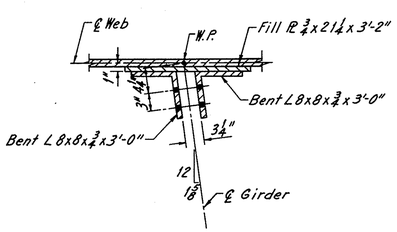

SECTION A-A

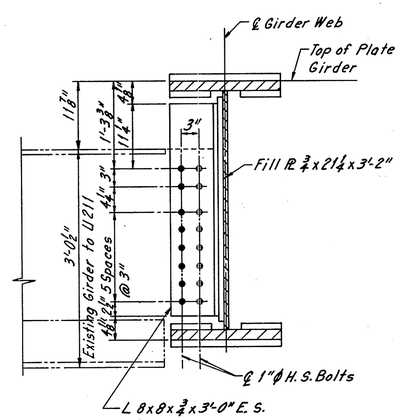

SECTION B-B

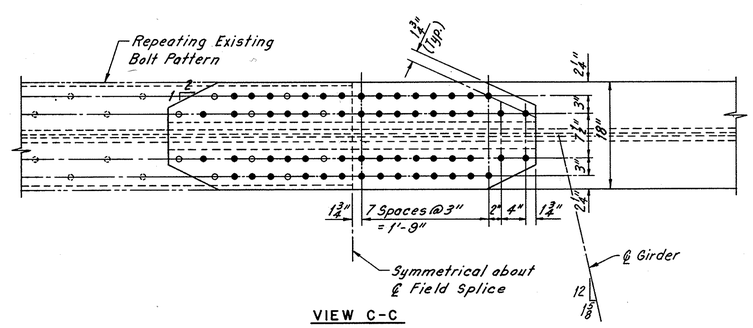

VIEW C-C

NOTES:

1. MATERIAL SHOWN PHANTOM (————————————) IN STEEL REPAIR DETAILS IS EXISTING AND TO REMAIN IN PLACE. ALL OTHER IS TO BE REMOVED AND REPLACED AS SHOWN.
2. DIMENSIONS SHOWN FOR STRUCTURAL STEEL REPAIRS AND REPLACEMENT TO EXISTING MEMBERS ARE FROM THE ORIGINAL PLANS. THE CONTRACTOR SHALL BE RESPONSIBLE FOR MAKING HIS OWN MEASUREMENT, BEFORE FABRICATING, TO INSURE THE VARIOUS PARTS OF THE WORK FIT TOGETHER WITH THE COMPLETED STRUCTURE.
3. ● DENOTES 7/8" Ø HIGH STRENGTH BOLTS EXCEPT AS NOTED.
4. ○ DENOTES RIVET HOLES IN EXISTING MEMBER TO BE USED FOR BOLTING.
5. ○ DENOTES EXISTING RIVETS.
6. FOR ESTIMATED STEEL REPAIR QUANTITIES SEE SHEET 62.

EUTHENICS INC.
CONSULTING ENGINEERS
CLEVELAND OHIO

REHABILITATION OF TOWER CITY BRIDGES
PROSPECT AVE., HURON ROAD,
WEST 2ND., 3RD. & 6TH. ST. VIADUCTS

STEEL REPAIR DETAILS
UNIT 30

HURON ROAD
CLEVELAND CUYAHOGA COUNTY OHIO

Made LRH	Trcd. JSC	Ckd. LJD	Rev. RAB	Revised
Date 8-20-81	Date 9-21-81	Date 8-3-82	Date 9-7-82	Sheet 83/170

FHWA REGION	STATE	PROJECT	
5	OHIO	M-ID 99 (9)	

84/170

CUYAHOGA COUNTY
HURON/ PROSPECT BRIDGE

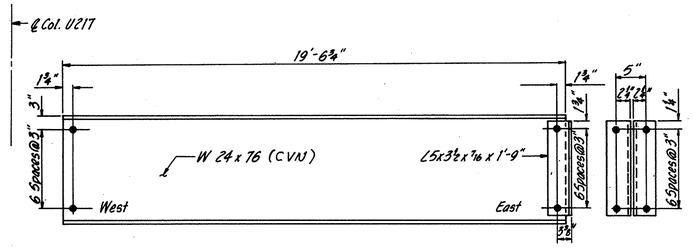

REF. NO. 11
Unit 31

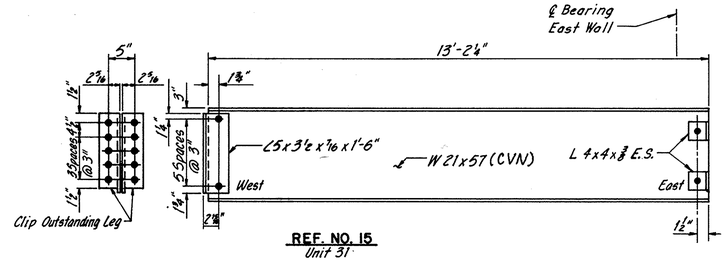

REF. NO. 15
Unit 31

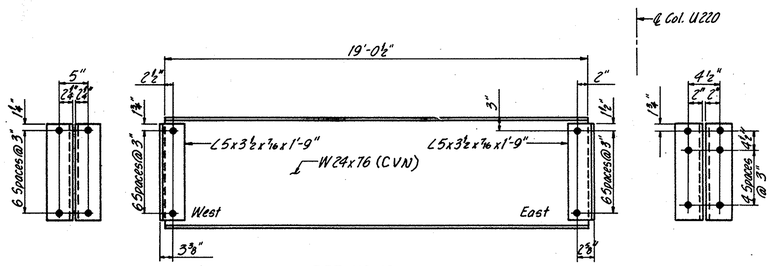

REF. NO. 12
Unit 31

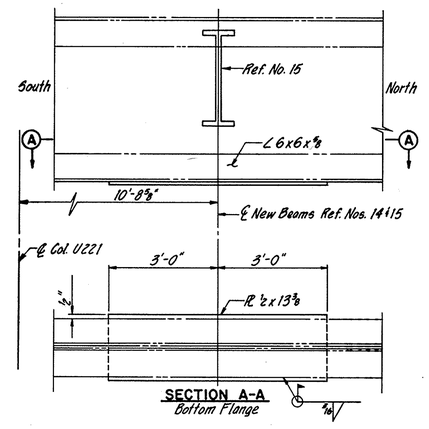

REF. NO. 19
Unit 31

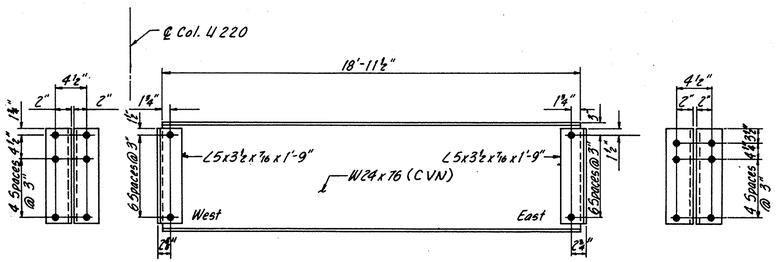

REF. NO. 13
Unit 31

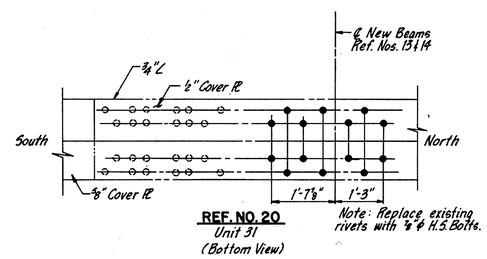

REF. NO. 20
Unit 31
(Bottom View)

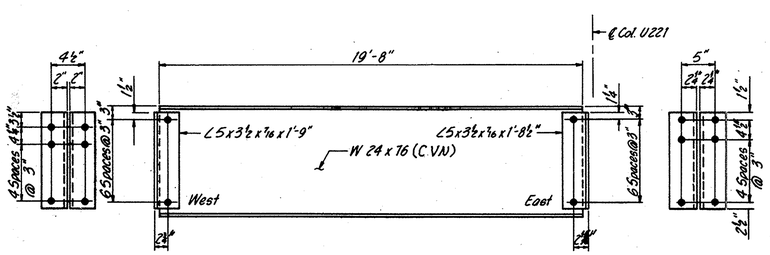

REF. NO. 14
Unit 31

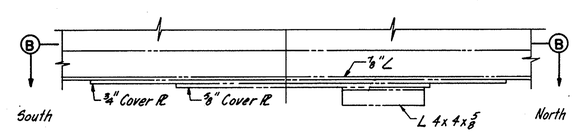

ELEVATION

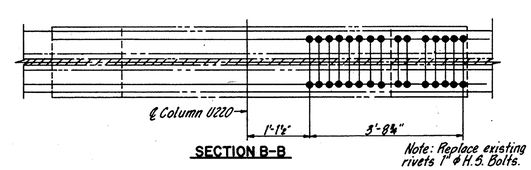

SECTION B-B

REF. NO. 21 & 22
Unit 31
(Ref. No. 22 Similar)

NOTES:

1. MATERIAL SHOWN PHANTON (———·— — ——— — — ———) IN STEEL REPAIR DETAILS IS EXISTING AND TO REMAIN IN PLACE. ALL OTHER IS TO BE REMOVED AND REPLACED AS SHOWN.
2. DIMENSIONS SHOWN FOR STRUCTURAL STEEL REPAIRS AND REPLACEMENT TO EXISTING MEMBERS ARE FROM THE ORIGINAL PLANS. THE CONTRACTOR SHALL BE RESPONSIBLE FOR MAKING HIS OWN MEASUREMENT, BEFORE FABRICATING, TO INSURE THE VARIOUS PARTS OF THE WORK FIT TOGETHER WITH THE COMPLETED STRUCTURE.
3. ● DENOTES 7/8" Ø HIGH STRENGTH BOLTS EXCEPT AS NOTED.
4. FOR ESTIMATED STEEL REPAIR QUANTITIES SEE SHEET 62.

EUTHENICS INC.
CONSULTING ENGINEERS
CLEVELAND OHIO

REHABILITATION OF TOWER CITY BRIDGES
PROSPECT AVE., HURON ROAD,
WEST 2ND., 3RD. & 6TH. ST. VIADUCTS

STEEL REPAIR DETAILS

UNIT 31

HURON ROAD

CLEVELAND CUYAHOGA COUNTY OHIO

Mode LRH	Trcd. JSC	Ckd. LJD	Rev. RAB	Revised
Date 8-28-81	Date 9-23-81	Date 8-4-82	Date 9-7-82	Sheet 84/170

FHWA REGION	STATE	PROJECT	
5	OHIO	M-ID 99(9)	

85/170

CUYAHOGA COUNTY
HURON / PROSPECT BRIDGE

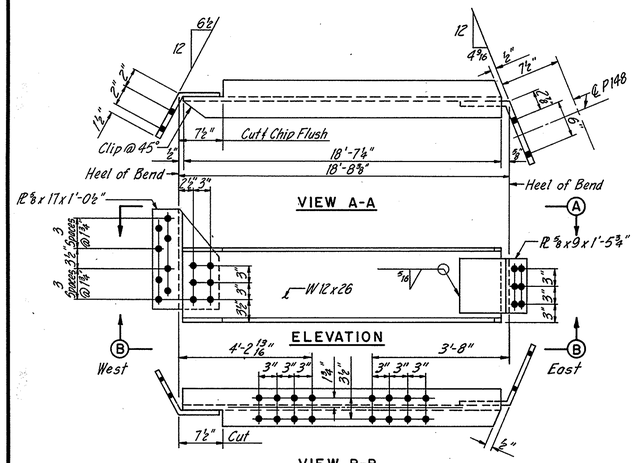

REF. NO. 12
(Unit 1-72.5 Level)

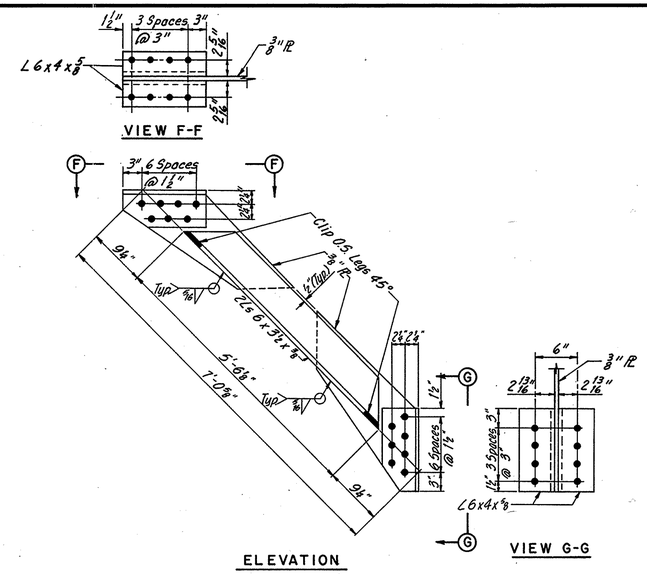

REF. NO. 1
(Unit 2-72.5 Level)
(Looking North)

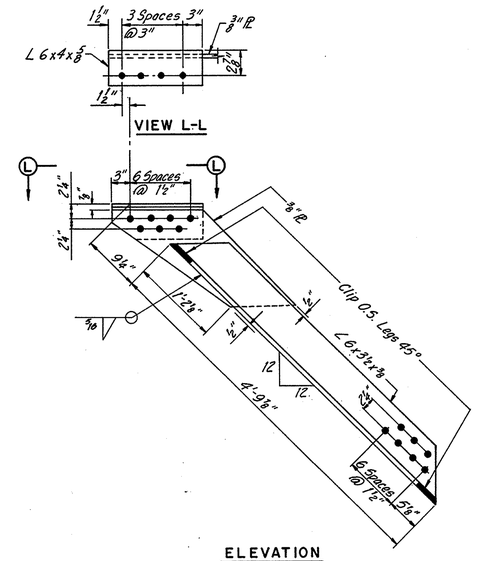

REF. NO. 4
(Unit 2-72.5 Level)
(Looking East)

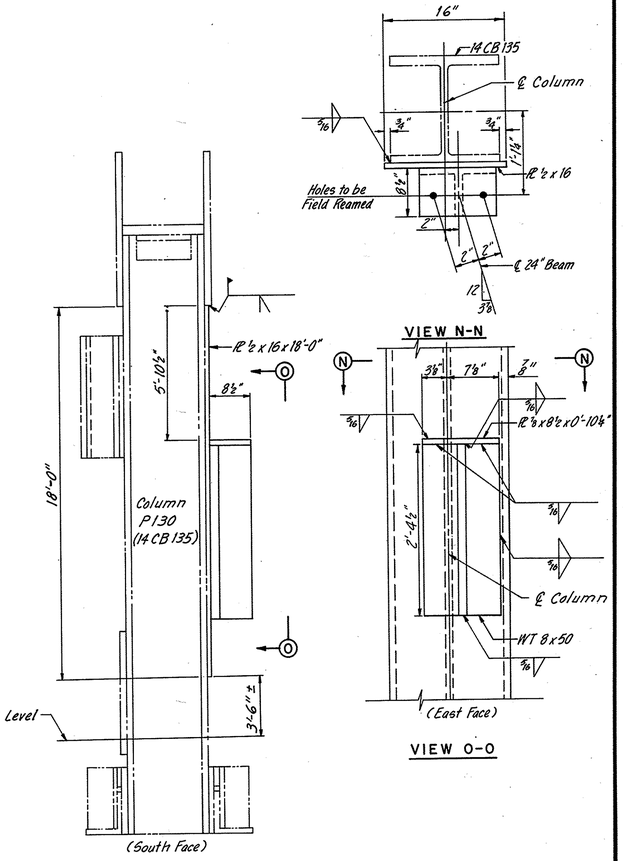

ELEVATION REF. NO. 18
(Unit 2-72.5 Level)

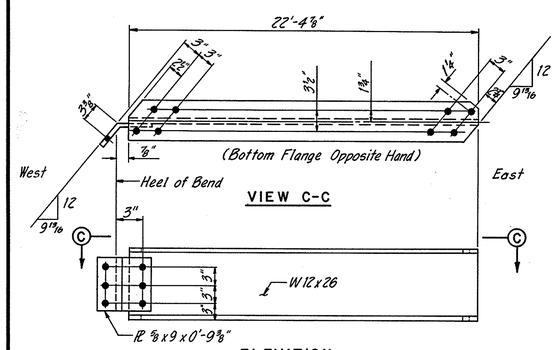

REF. NO. 13
(Unit 1-72.5 Level)

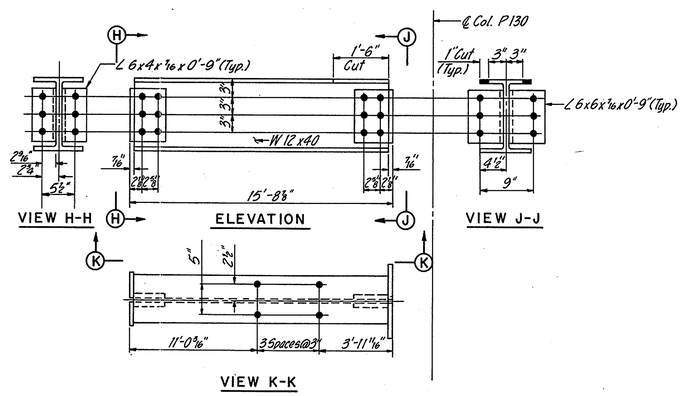

REF. NO. 2
(Unit 2-72.5 Level)
(Looking North)

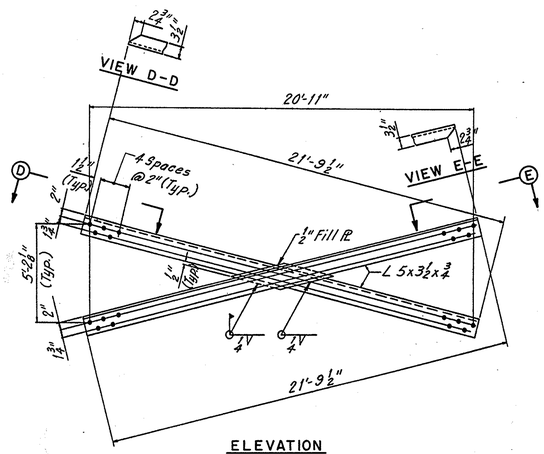

REF. NO. 14
(Unit 1-72.5 Level)

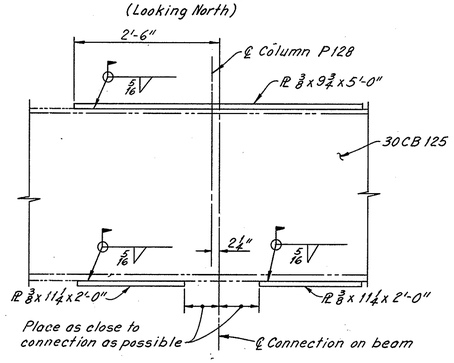

REF. NO. 3
(Unit 2-72.5 Level)

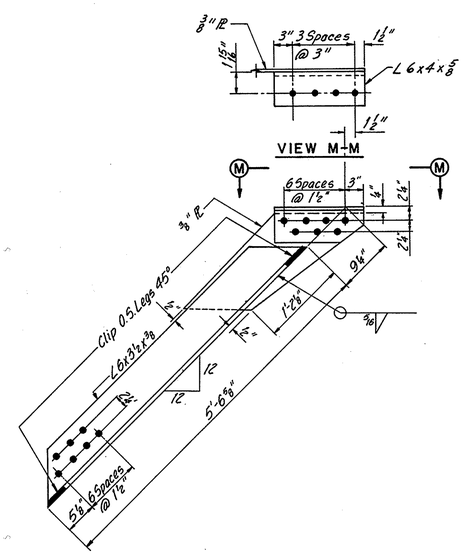

REF. NO. 5
(Unit 2-72.5 Level)
(Looking East)

NOTE:
FOR NOTES SEE SHEET 86.

EUTHENICS INC.
CONSULTING ENGINEERS
CLEVELAND OHIO

REHABILITATION OF TOWER CITY BRIDGES
PROSPECT AVE., HURON ROAD,
WEST 2ND., 3RD. & 6TH. ST. VIADUCTS

STEEL REPAIR DETAILS
UNITS 1 & 2 72.5 LEVEL
PROSPECT AVE.

CLEVELAND CUYAHOGA COUNTY OHIO

Made LRH	Trcd. JSC	Ckd. LJD	Rev. RAB	Scale: No Scale
Date 2-26-81	Date 9-25-81	Date 8-5-82	Date 9-8-82	Sheet 85/170

FHWA REGION	STATE	PROJECT	
5	OHIO	M-ID 99(9)	

86/170

CUYAHOGA COUNTY
HURON/ PROSPECT BRIDGE

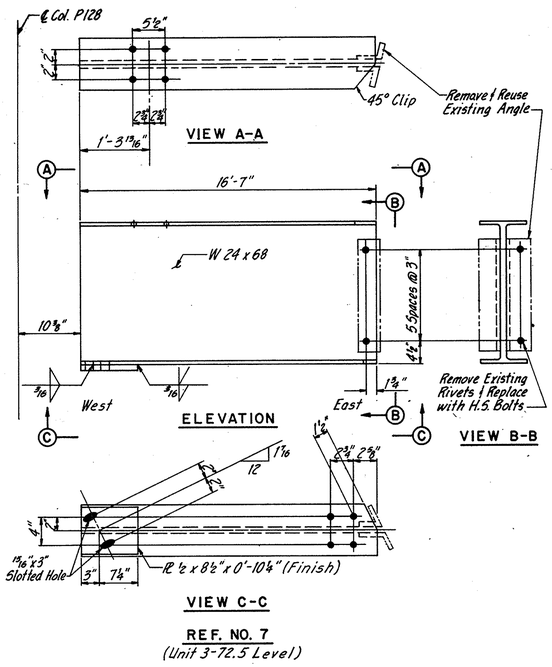

REF. NO. 7
(Unit 3-72.5 Level)

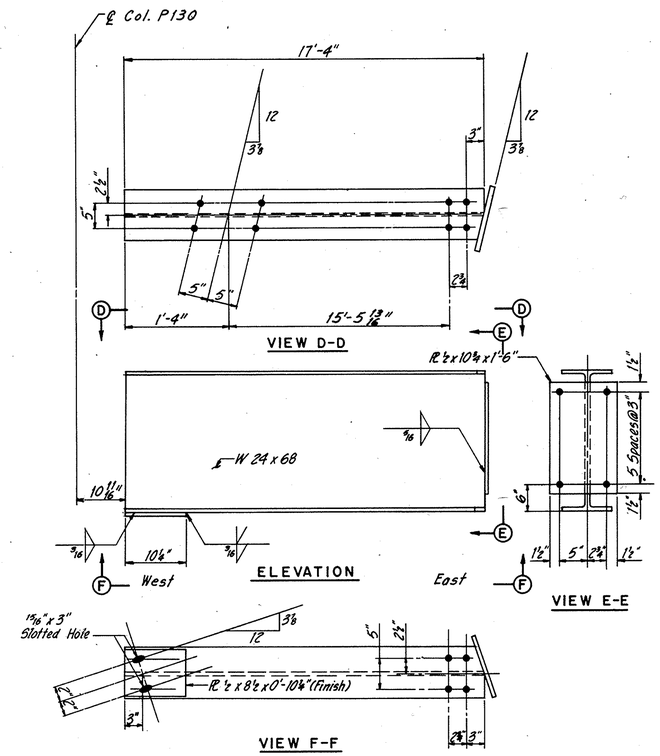

REF. NO. 8
(Unit 3-72.5 Level)

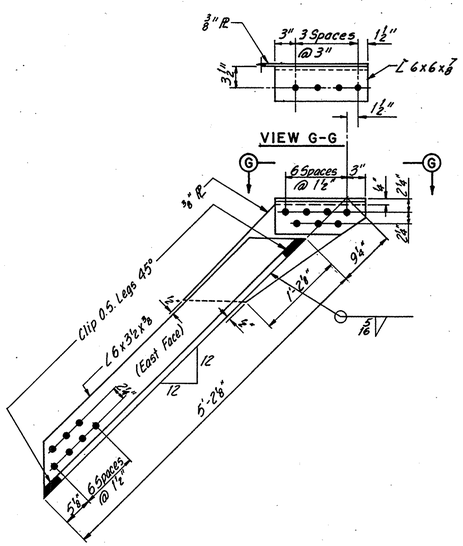

ELEVATION

REF. NOS. 9 & 10
(Unit 3-72.5 Level)
(Ref. No. 10 Opposite Hand)

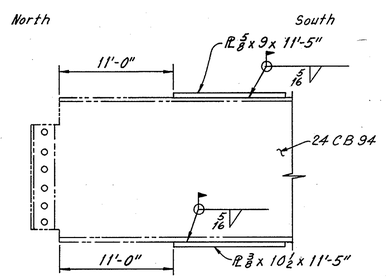

REF. NO. 11
(Unit 3-72.5 Level)

NOTES:

1. Material shown Phantom (————————) in Steel Repair Details is existing and to remain in place. All other is to be removed and replaced as shown.
2. Dimensions shown for Structural Steel Repairs and Replacement to existing members are from the original plans. The Contractor shall be responsible for making his own measurement, before fabricating, to insure the various parts of the work fit together with the completed structure.
3. ● Denotes 7/8" Ø High Strength Bolts except as noted.
4. For Estimated Steel Repair Quantities see Sheet 66.

EUTHENICS INC.
CONSULTING ENGINEERS
CLEVELAND OHIO

REHABILITATION OF TOWER CITY BRIDGES
PROSPECT AVE., HURON ROAD,
WEST 2ND., 3RD. & 6TH. ST. VIADUCTS
STEEL REPAIR DETAILS
UNIT 3 72.5 LEVEL
PROSPECT AVE.
CLEVELAND CUYAHOGA COUNTY OHIO

Made LRH	Trcd. JSC	Ckd. LJD	Rev. RAB	Revised
Date 8-29-81	Date 9-28-81	Date 8-9-82	Date 9-8-82	Sheet 86/170

FHWA REGION	STATE	PROJECT	
5	OHIO	M-ID 99 (9)	

87/170

CUYAHOGA COUNTY
HURON / PROSPECT BRIDGE

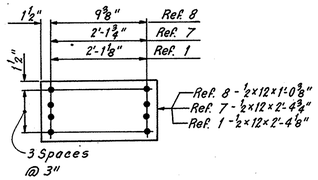

REF. NOS. 1, 7 & 8
(Units 27, 28 & 29-72.5 Level)

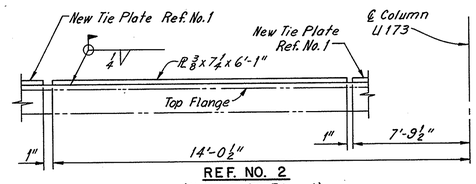

REF. NO. 2
(Unit 27-72.5 Level)

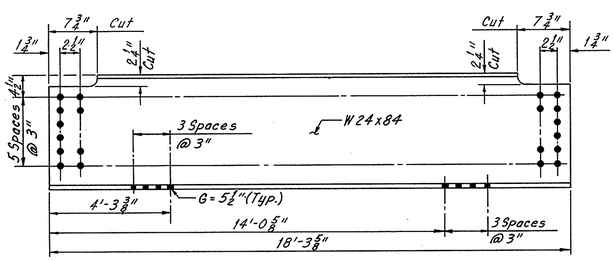

REF. NO. 3
(Unit 27-72.5 Level)

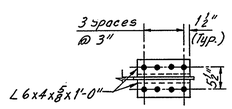

VIEW A-A

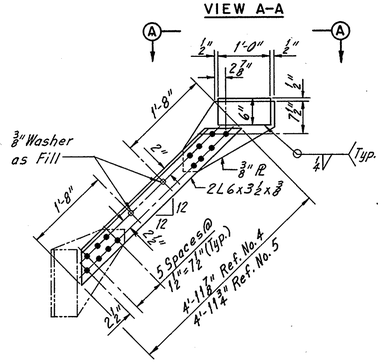

ELEVATION

REF. NOS. 4 & 5
(Unit 27-72.5 Level)

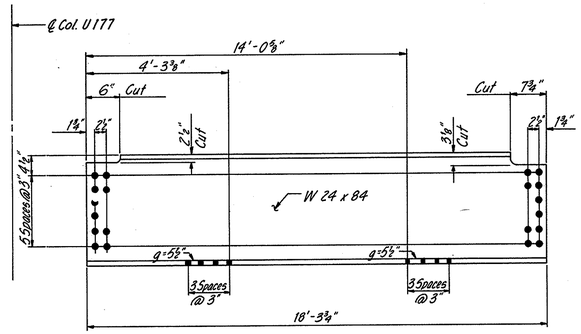

REF. NO. 6
(Unit 28-72.5 Level)

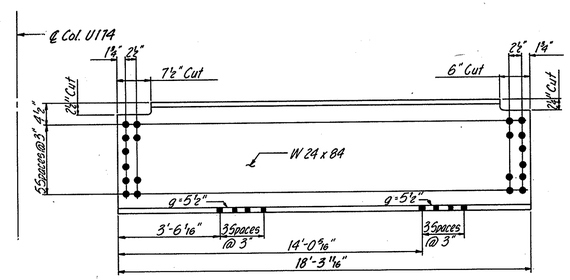

REF. NO. 22
(Unit 28-72.5 Level)

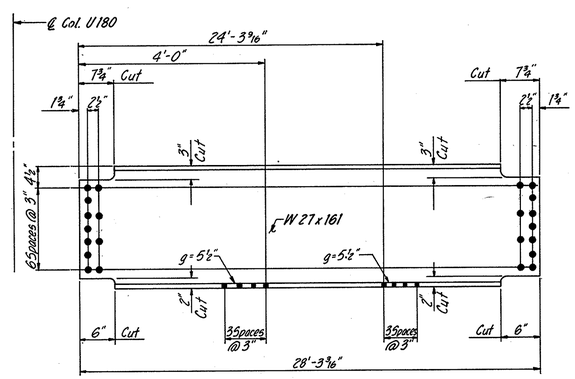

REF. NO. 23
(Unit 28-72.5 Level)

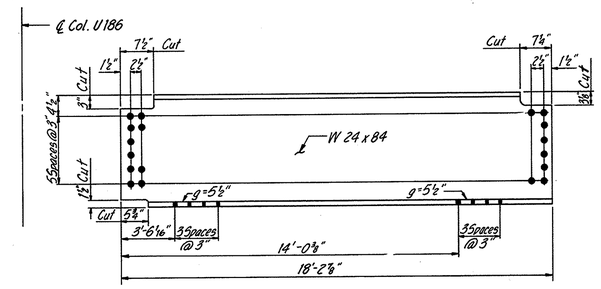

REF. NO. 24
(Unit 29-72.5 Level)

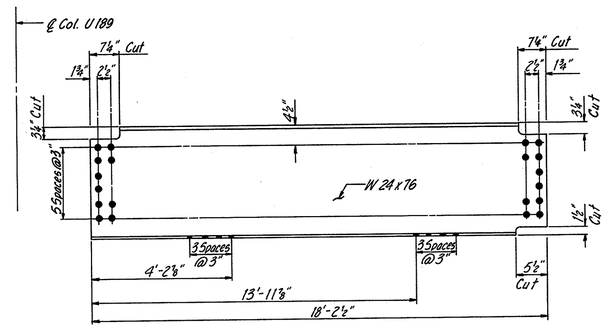

REF. NO. 25
(Unit 29-72.5 Level)

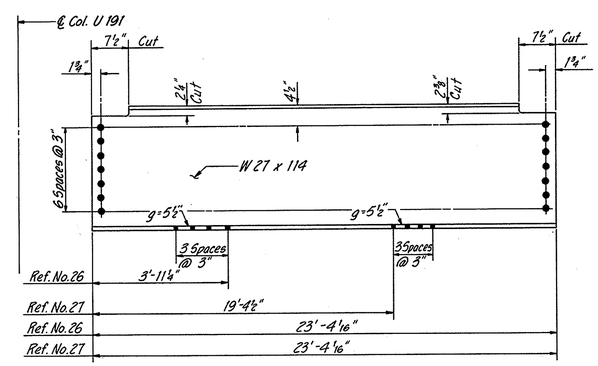

REF. NOS. 26 & 27
(Unit 29-72.5 Level)

NOTES:

1. MATERIAL SHOWN PHANTOM (——— - - ——— - - ———) IN STEEL REPAIR DETAILS IS EXISTING AND TO REMAIN IN PLACE. ALL OTHER IS TO BE REMOVED AND REPLACED AS SHOWN.
2. DIMENSIONS SHOWN FOR STRUCTURAL STEEL REPAIRS AND REPLACEMENT TO EXISTING MEMBERS ARE FROM THE ORIGINAL PLANS. THE CONTRACTOR SHALL BE RESPONSIBLE FOR MAKING HIS OWN MEASUREMENT, BEFORE FABRICATING, TO INSURE THE VARIOUS PARTS OF THE WORK FIT TOGETHER WITH THE COMPLETED STRUCTURE.
3. ● DENOTES 7/8" Ø HIGH STRENGTH BOLTS EXCEPT AS NOTED.
4. FOR ESTIMATED STEEL REPAIR QUANTITIES SEE SHEET 68.

EUTHENICS INC.
CONSULTING ENGINEERS
CLEVELAND OHIO

REHABILITATION OF TOWER CITY BRIDGES
PROSPECT AVE., HURON ROAD,
WEST 2ND., 3RD. & 6TH. ST. VIADUCTS

STEEL REPAIR DETAILS
UNITS 27, 28 & 29 72.5 LEVEL

HURON ROAD
CLEVELAND CUYAHOGA COUNTY OHIO

Mode LRH	Trcd. JSC	Ckd. LJD	Rev. RAB	Revised
Date 11-3-81	Date 12-1-81	Date 8-10-82	Date 9-8-82	Sheet 87/170

FHWA REGION	STATE	PROJECT	
5	OHIO	M-ID 99 (9)	

88
170

CUYAHOGA COUNTY
HURON / PROSPECT BRIDGE

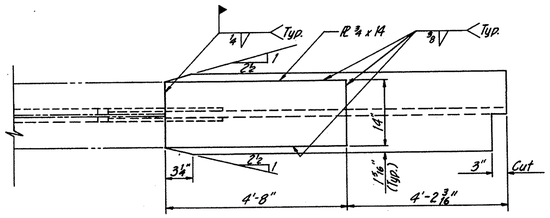

TOP VIEW

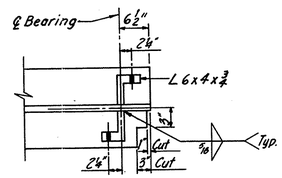

SECTION A-A

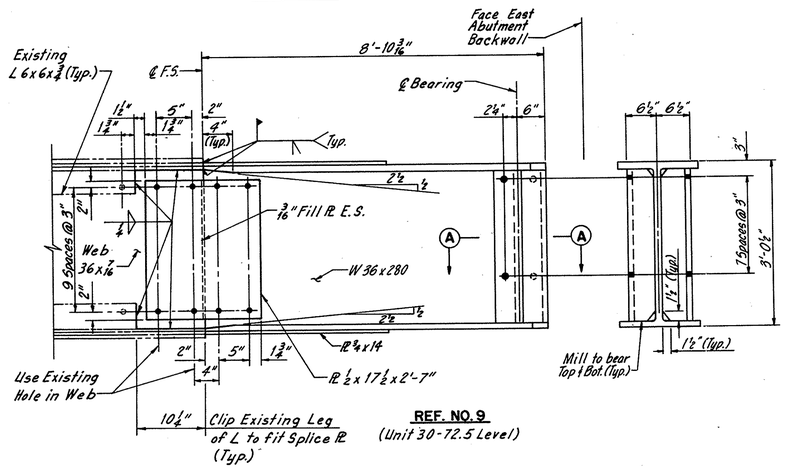

REF. NO. 9
(Unit 30-72.5 Level)

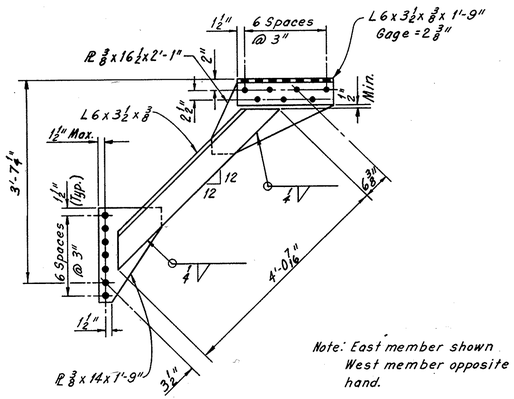

REF. NO. 10
(Unit 30-72.5 Level)
(Two Braces)

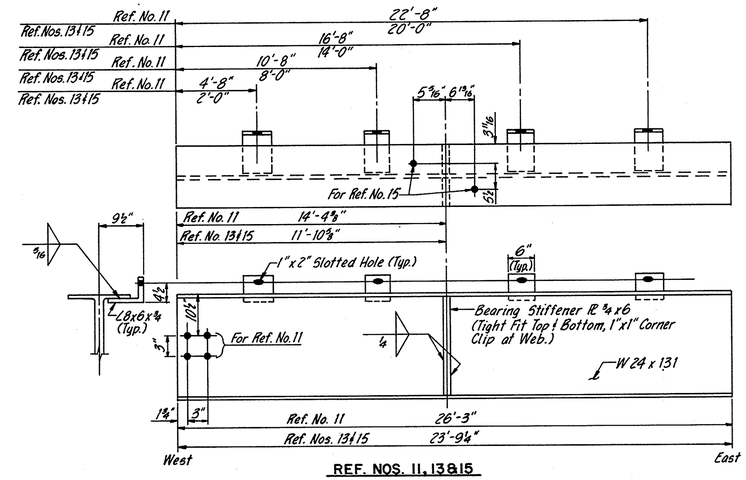

REF. NOS. 11, 13 & 15
(Units 30 & 31-72.5 Level)

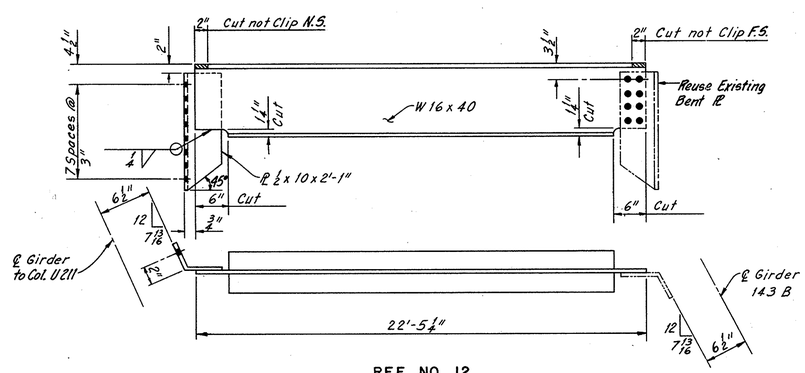

REF. NO. 12
(Unit 30-72.5 Level)

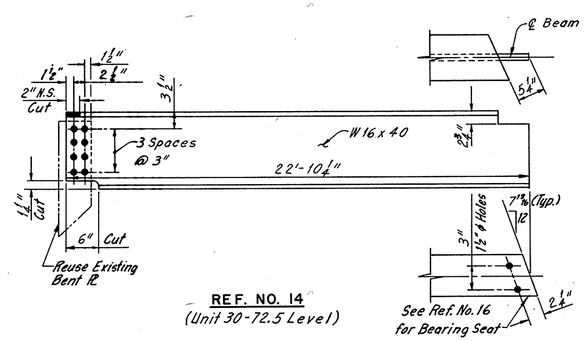

REF. NO. 14
(Unit 30-72.5 Level)

NOTES:

1. MATERIAL SHOWN PHANTOM (———— ———— ————) IN STEEL REPAIR DETAILS IS EXISTING AND TO REMAIN IN PLACE. ALL OTHER IS TO BE REMOVED AND REPLACED AS SHOWN.
2. DIMENSIONS SHOWN FOR STRUCTURAL STEEL REPAIRS AND REPLACEMENT TO EXISTING MEMBERS ARE FROM THE ORIGINAL PLANS. THE CONTRACTOR SHALL BE RESPONSIBLE FOR MAKING HIS OWN MEASUREMENT, BEFORE FABRICATING, TO INSURE THE VARIOUS PARTS OF THE WORK FIT TOGETHER WITH THE COMPLETED STRUCTURE.
3. ● DENOTES 7/8" Ø HIGH STRENGTH BOLTS EXCEPT AS NOTED.
4. FOR ESTIMATED STEEL REPAIR QUANTITIES SEE SHEET 68.

EUTHENICS INC.
CONSULTING ENGINEERS
CLEVELAND OHIO

REHABILITATION OF TOWER CITY BRIDGES
PROSPECT AVE., HURON ROAD,
WEST 2ND., 3RD. & 6TH. ST. VIADUCTS

STEEL REPAIR DETAILS
UNITS 30 & 31 72.5 LEVEL

HURON ROAD
CLEVELAND CUYAHOGA COUNTY OHIO

Made LRH	Trcd. JSC	Chkd. LJD	Rev. RAB	Scale: No Scale
Date 4-24-78	Date 4-25-78	Date 8-12-82	Date 9-8-82	Sheet 88 / 170

FHWA REGION	STATE	PROJECT	
5	OHIO	M-ID 99 (9)	

89
170

CUYAHOGA COUNTY
HURON / PROSPECT BRIDGE

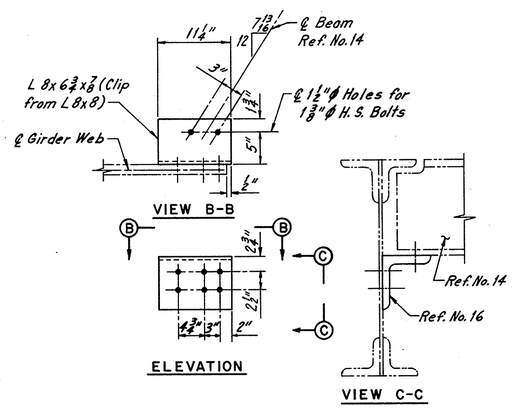

REF. NO. 16
(Unit 31-72.5 Level)

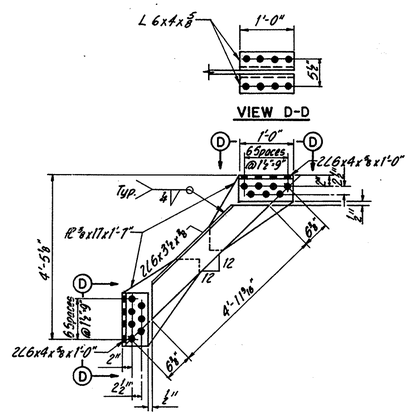

REF. NO. 17
(Unit 31-72.5 Level)

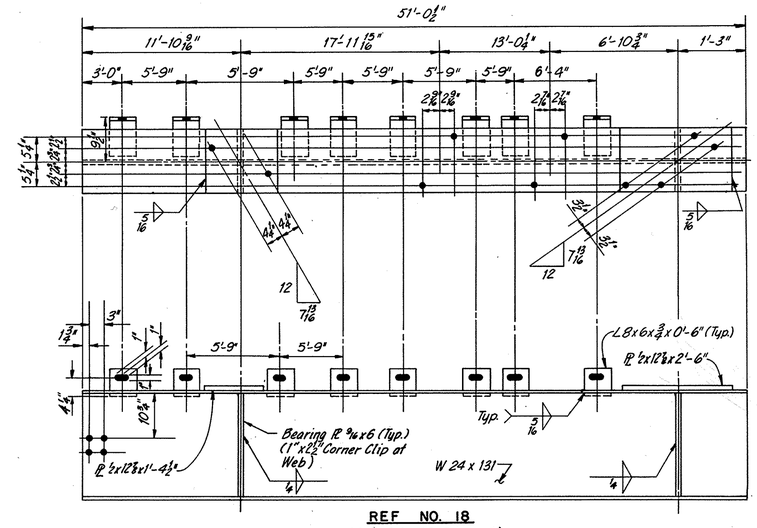

REF NO. 18
(Unit 31-72.5 Level)

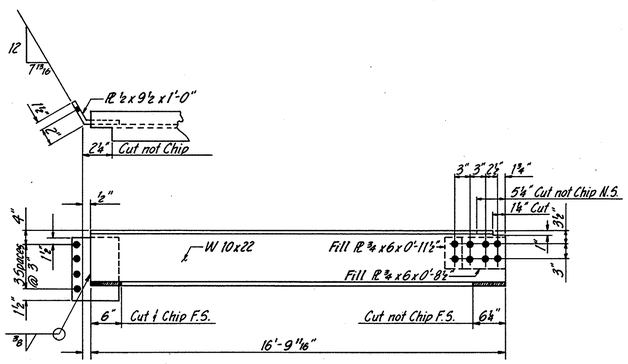

REF. NO. 19
(Unit 31-72.5 Level)

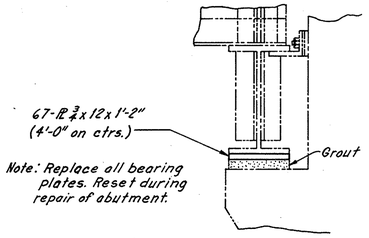

REF. NO. 20
(Units 30 & 31-72.5 Level)

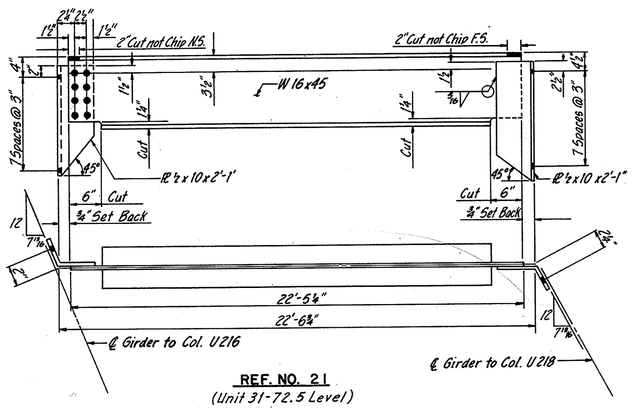

REF. NO. 21
(Unit 31-72.5 Level)

NOTES:

1. MATERIAL SHOWN PHANTOM (————————) IN STEEL REPAIR DETAILS IS EXISTING AND TO REMAIN IN PLACE. ALL OTHER IS TO BE REMOVED AND REPLACED AS SHOWN.
2. DIMENSIONS SHOWN FOR STRUCTURAL STEEL REPAIRS AND REPLACEMENT TO EXISTING MEMBERS ARE FROM THE ORIGINAL PLANS. THE CONTRACTOR SHALL BE RESPONSIBLE FOR MAKING HIS OWN MEASUREMENT, BEFORE FABRICATING, TO INSURE THE VARIOUS PARTS OF THE WORK FIT TOGETHER WITH THE COMPLETED STRUCTURE.
3. ● DENOTES 7/8" Ø HIGH STRENGTH BOLTS EXCEPT AS NOTED.
4. FOR ESTIMATED STEEL REPAIR QUANTITIES SEE SHEET 68.

EUTHENICS INC.
CONSULTING ENGINEERS
CLEVELAND OHIO

REHABILITATION OF TOWER CITY BRIDGES
PROSPECT AVE., HURON ROAD,
WEST 2ND., 3RD. & 6TH. ST. VIADUCTS

STEEL REPAIR DETAILS

UNIT 31 72.5 LEVEL

HURON ROAD
CLEVELAND CUYAHOGA COUNTY OHIO

Made LRH	Trcd. JSC	Ckd. LJD	Rev. RAB	Revised
Date 11-18-81	Date 12-14-81	Date 8-16-82	Date 9-8-82	Sheet 89/170

FHWA REGION	STATE	PROJECT	
5	OHIO	M-1D 99(9)	

90/170

CUYAHOGA COUNTY
HURON / PROSPECT BRIDGE

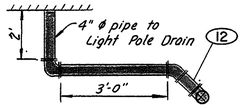

VIEW F-F
(Looking West)

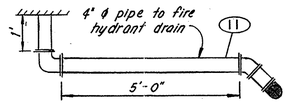

VIEW G-G
(Looking West)

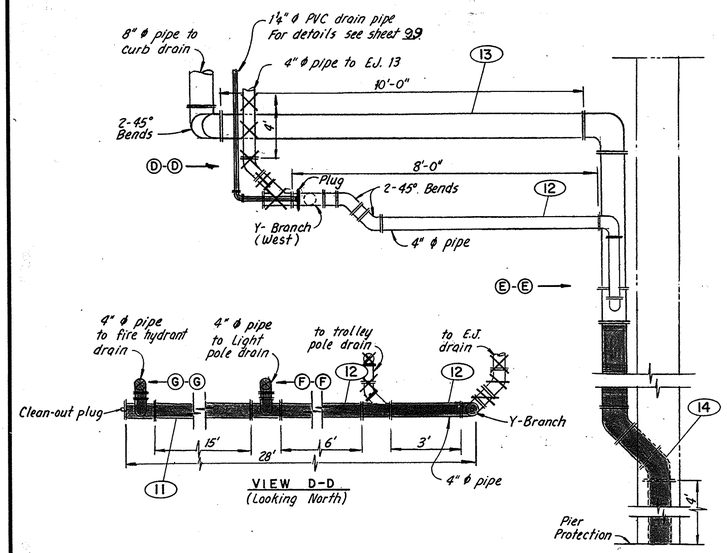

VIEW D-D
(Looking North)

REF. 11 TO 14 - SHEET 55
COLUMN P146
(Looking West)

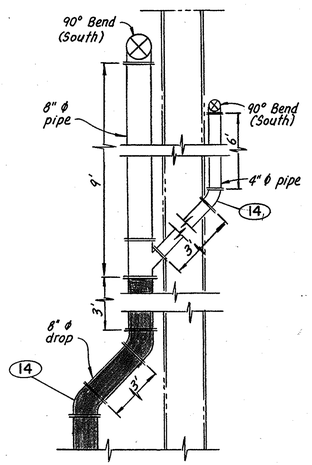

VIEW E-E
(Looking North)

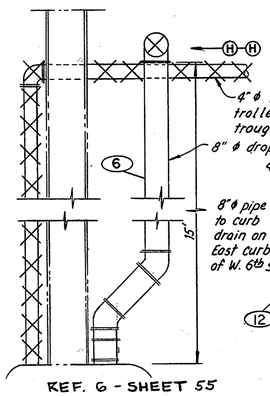

REF. 6 - SHEET 55
COLUMN P155
(Looking North)

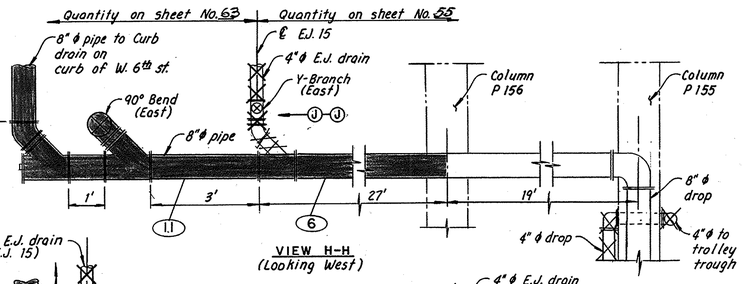

VIEW H-H
(Looking West)

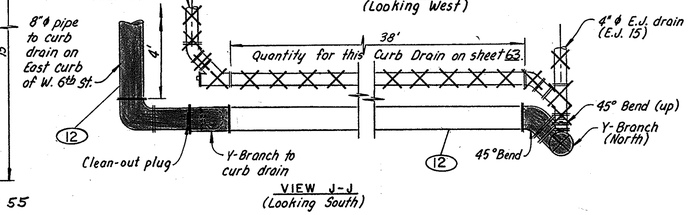

VIEW J-J
(Looking South)

Note: For Drainage items 11 and 12 see sheet 63

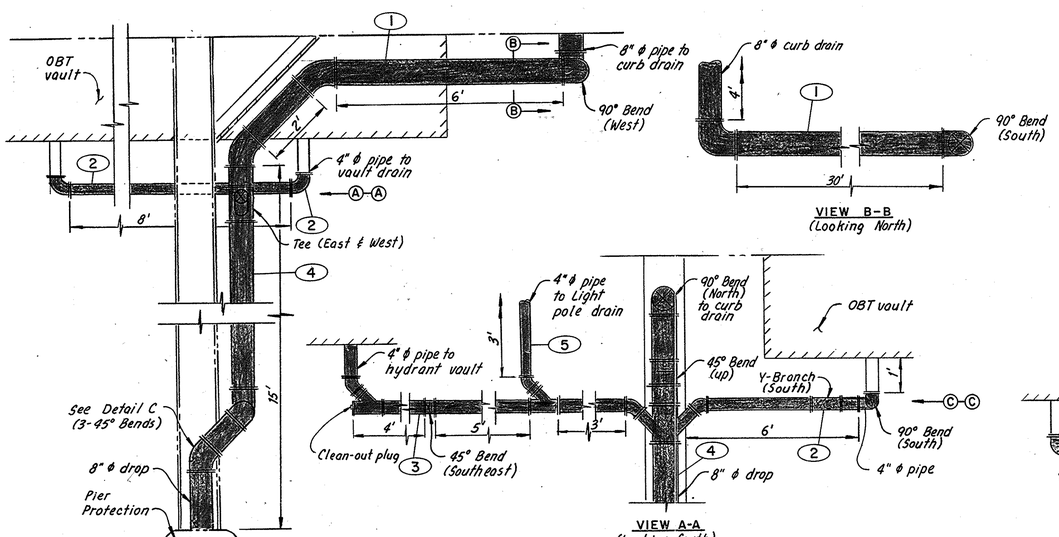

REF 1 TO 5 - SHEET 55
COLUMN P158
(Looking West)

VIEW A-A
(Looking South)

VIEW B-B
(Looking North)

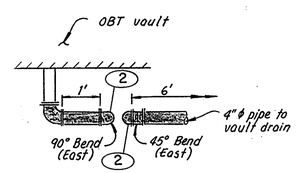

VIEW C-C
(Looking East)

NOTES:
1. For Estimated Quantities, see Sheet 55.
2. For Miscellaneous Drainage Details see Sheet 98.

LEGEND
- Remove pipe
- Clean and paint pipe
- Replace pipe
- (0) Drainage Reference No.

EUTHENICS INC.
CONSULTING ENGINEERS
CLEVELAND OHIO

REHABILITATION OF TOWER CITY BRIDGES
PROSPECT AVE., HURON ROAD,
WEST 2ND., 3RD. & 6TH. ST. VIADUCTS

DRAINAGE DETAILS
UNIT 1

PROSPECT AVE.
CLEVELAND CUYAHOGA COUNTY OHIO

Mode REM	Trcd. REM	Ckd. LJD	Rev. RAB	Scale: 1/4" = 1'-0"
Date 4-3-78	Date 4-10-78	Date 1-12-82	Date 10-11-82	Sheet 90/170

Superseded by sheet 90S, 2-25-85

FHWA REGION	STATE	PROJECT	
5	OHIO	IX-ID99(9)	

90A

CUYAHOGA COUNTY
HURON/PROSPECT BRIDGE

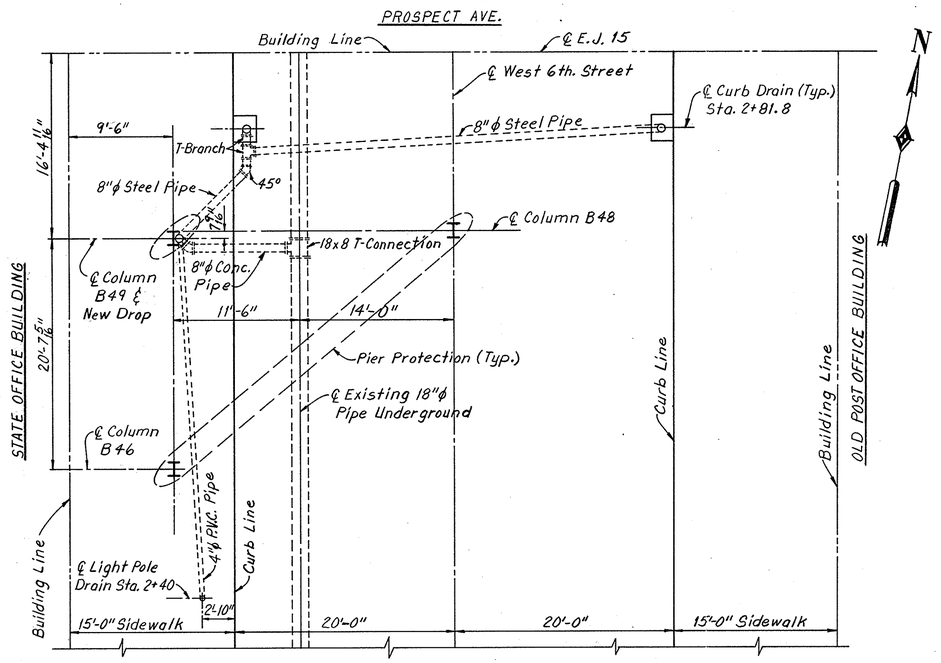

PLAN

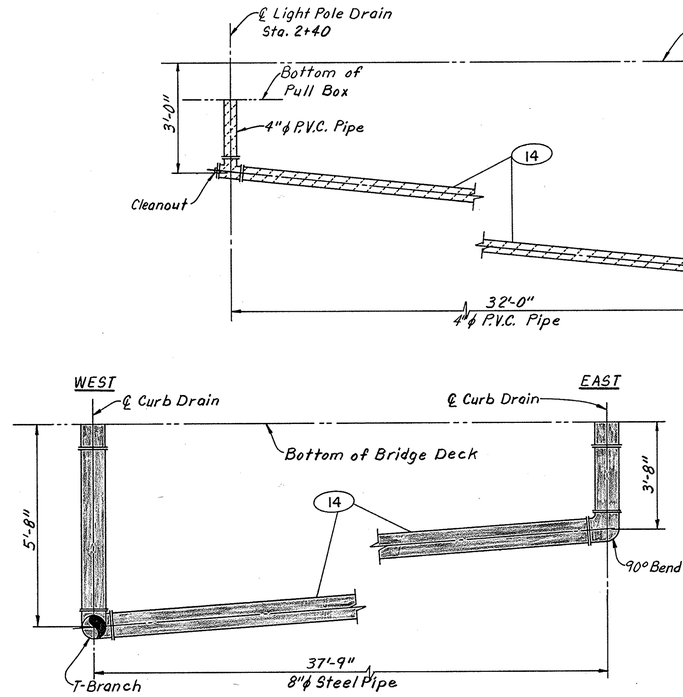

SECTION A-A
(Looking North)

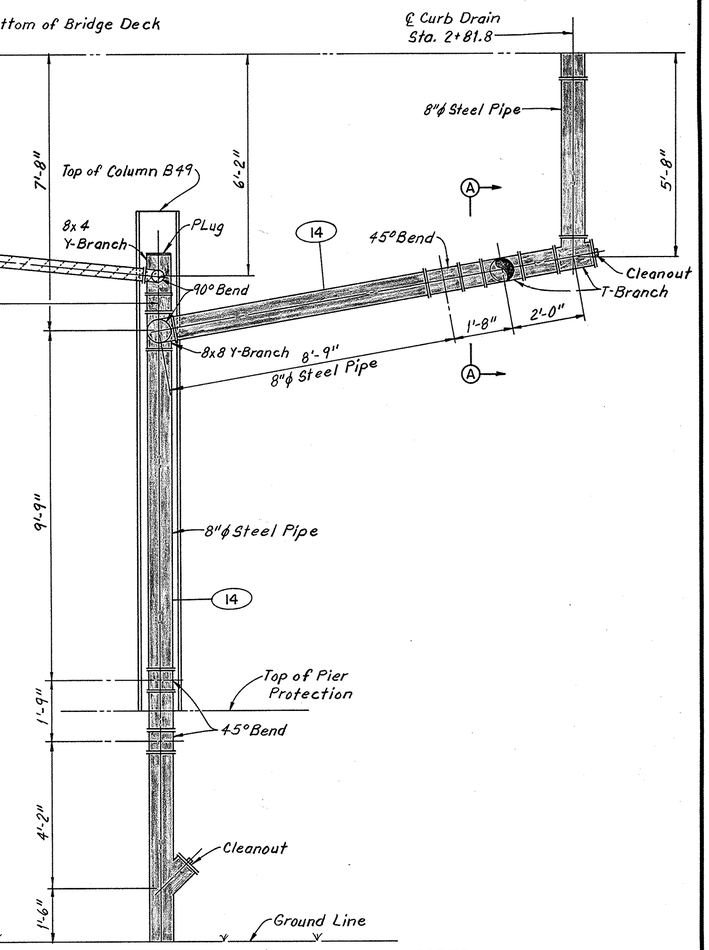

COLUMN B49
(Looking West)

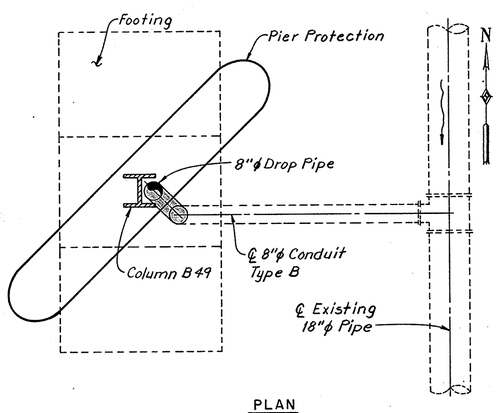

PLAN

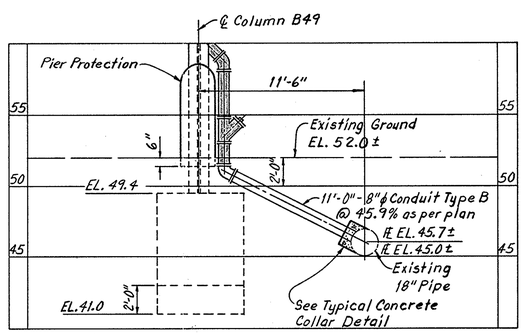

PROFILE
(Looking North)

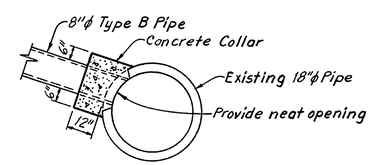

TYPICAL DETAIL FOR CONCRETE COLLAR

NOTE:
BACKFILL AROUND COLLAR AFTER CONCRETE HAS ATTAINED SUFFICIENT STRENGTH. COST OF CONCRETE COLLAR IS INCLUDED IN THE CONTRACT UNIT PRICE BID PER LIN. FT. 8" Ø TYPE B PIPE.

LEGEND

- INDICATES PIPES TO BE REMOVED
- INDICATES P.V.C. PIPES
- INDICATES STEEL PIPE TO BE REPLACED
- INDICATES STEEL PIPE TO BE CLEANED & PAINTED

0 ESTIMATED DRAINAGE QUANTITIES

REF. NO.	DESCRIPTION	ITEM SPECIAL CLEAN & PAINT EXIST. PIPE (LIN. FT.) PIPE SIZE (IN.) 3	4	8		ITEM 518 PIPE REPLACEMENT (LIN. FT.) PIPE SIZE (IN.) 1¼"P.V.C.	3	4	8	4"P.V.C.	FOR DETAILS SEE SHEET	DROP LOCATION
14	Light Pole, Curb Drains & Drop								80	35		B49
	Totals								80	35		

Added 2-25-85

EUTHENICS INC.
CONSULTING ENGINEERS
CLEVELAND OHIO

REHABILITATION OF TOWER CITY BRIDGES
PROSPECT AVE., HURON ROAD,
WEST 2ND., 3RD. & 6TH. ST. VIADUCTS

DRAINAGE DETAILS

WEST 6th. STREET

CLEVELAND CUYAHOGA COUNTY OHIO

Mode JSC	Trcd. JSC	Ckd. LJD	Rev. RAB	Scale:
Date 2-8-85	Date 2-8-85	Date 2-12-85	Date 2-13-85	Sheet 90A

ODOT 2-16-85 TES

FHWA REGION	STATE	PROJECT	
5	OHIO	IX-ID99(9)	

90S

CUYAHOGA COUNTY
HURON/PROSPECT BRIDGE

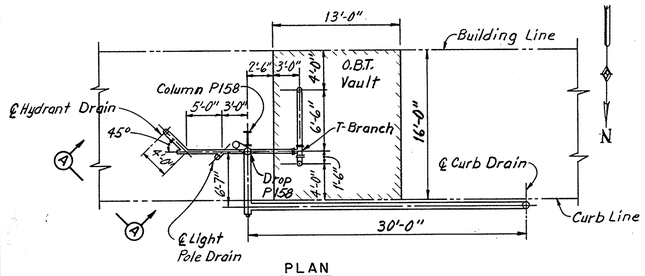

PLAN
(Column P158 Drop)

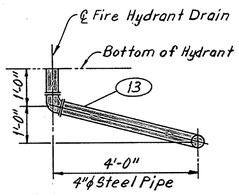

VIEW A-A
(Looking Southwest)

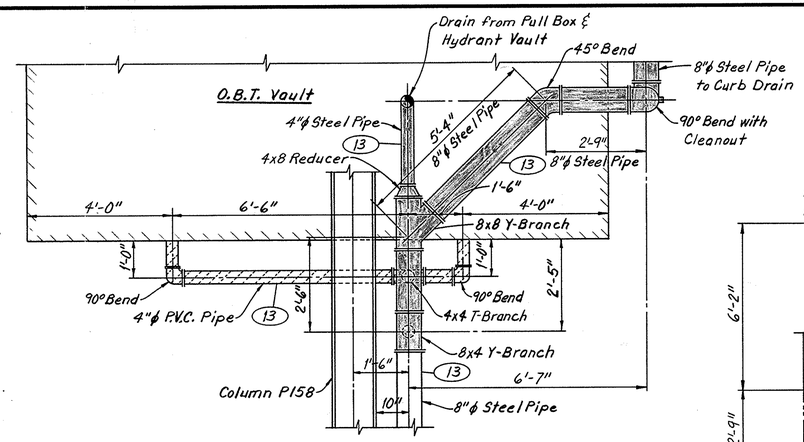

SECTION B-B
(Looking West)

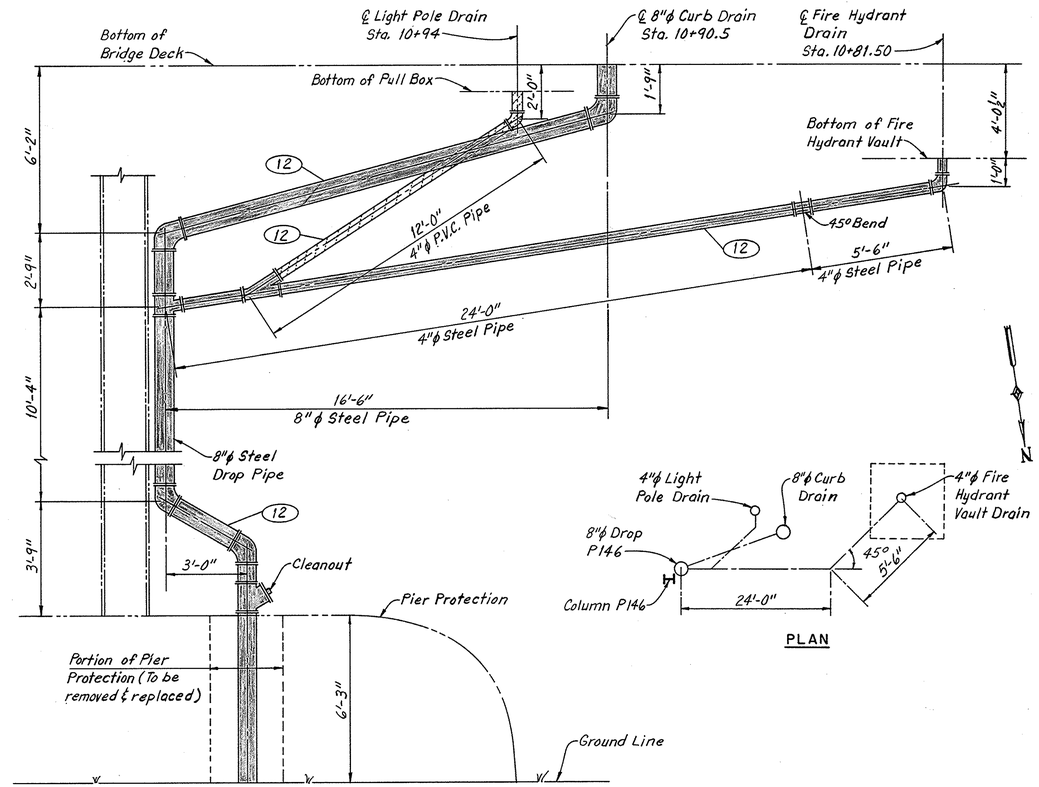

COLUMN P146
(Looking South)

PLAN

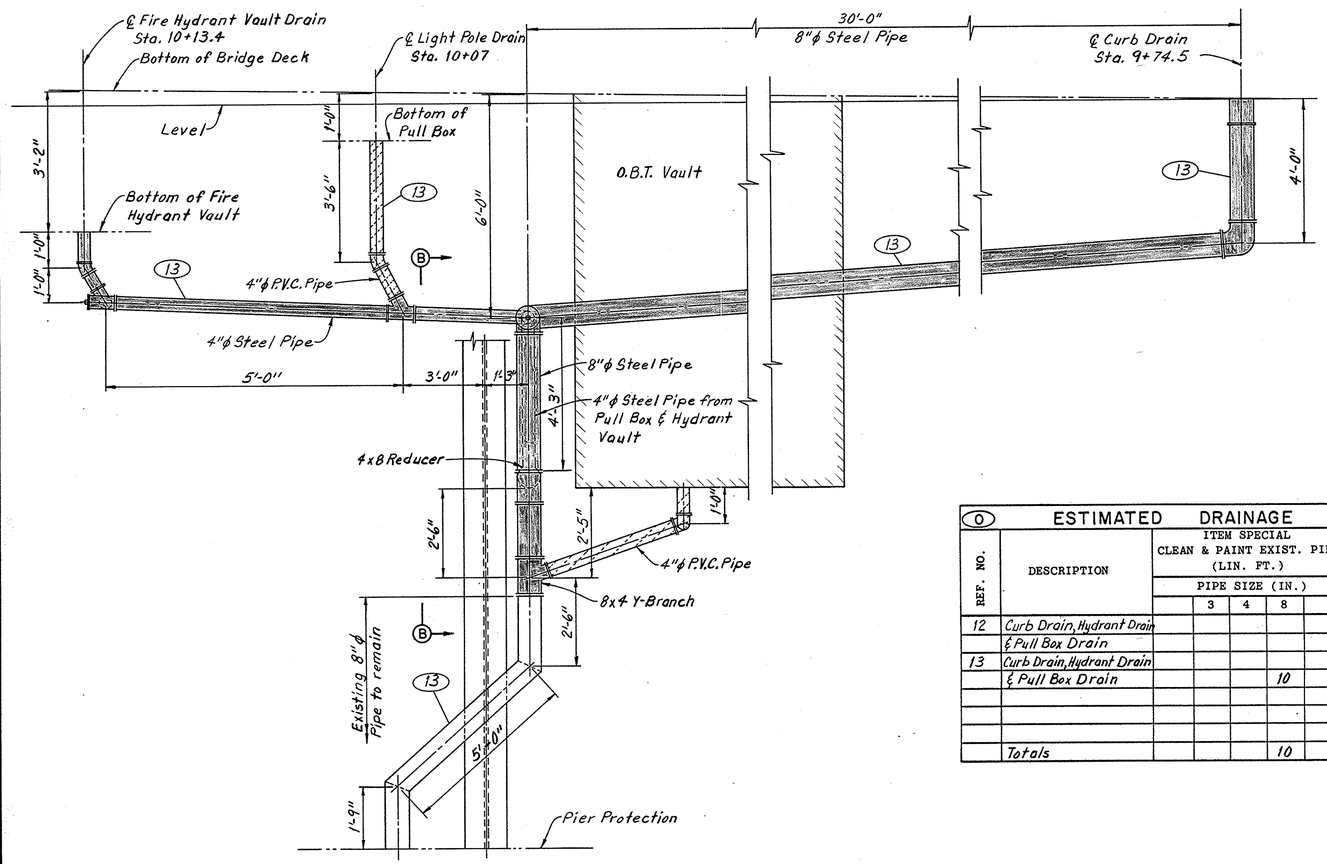

COLUMN P158
(Looking South)

LEGEND

- ~~X X X X~~ INDICATES PIPES TO BE REMOVED
- INDICATES P.V.C. PIPES
- INDICATES STEEL PIPE TO BE REPLACED
- INDICATES STEEL PIPE TO BE CLEANED & PAINTED

NOTE:
FOR LOCATION OF DROPS SEE PLAN ON SHEET 54A.

(0) ESTIMATED DRAINAGE QUANTITIES

REF. NO.	DESCRIPTION	ITEM SPECIAL CLEAN & PAINT EXIST. PIPE (LIN. FT.) PIPE SIZE (IN.) 3	4	8		ITEM 518 PIPE REPLACEMENT (LIN. FT.) PIPE SIZE (IN.) 1¼" P.V.C.	3	4	8	4" P.V.C.	FOR DETAILS SEE SHEET	DROP LOCATION
12	Curb Drain, Hydrant Drain											
	& Pull Box Drain							31	45	13		P146
13	Curb Drain, Hydrant Drain											
	& Pull Box Drain			10				19	46	21		P158
	Totals			10				50	91	34		

Supersedes sheet 90, 2-25-85

EUTHENICS INC.
CONSULTING ENGINEERS
CLEVELAND OHIO

REHABILITATION OF TOWER CITY BRIDGES
PROSPECT AVE., HURON ROAD,
WEST 2ND., 3RD. & 6TH. ST. VIADUCTS
DRAINAGE DETAILS
UNIT I
PHASE III
PROSPECT AVE.

CLEVELAND CUYAHOGA COUNTY OHIO

Mode JSC	Trcd. JSC	Ckd. LJD	Rev. RAB	Scale:
Date 2-11-85	Date 2-11-85	Date 2-13-85	Date 2-13-85	Sheet 90S

ODOT 2-16-85 TES

FHWA REGION	STATE	PROJECT	
5	OHIO	M-ID 99 (9)	

91
170

CUYAHOGA COUNTY
HURON / PROSPECT BRIDGE

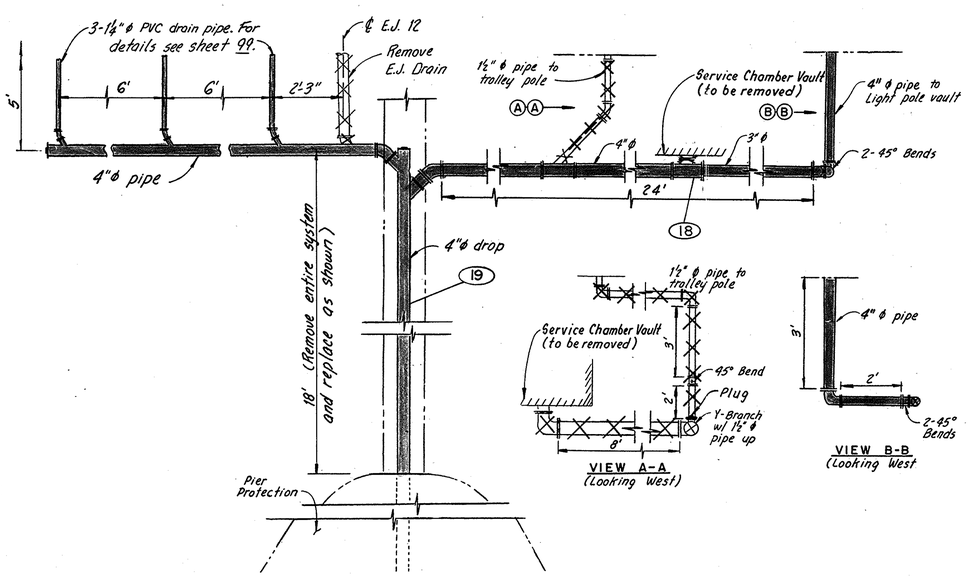

REF. 18 & 19 - SHEET 55
COLUMN P130
(Looking South)

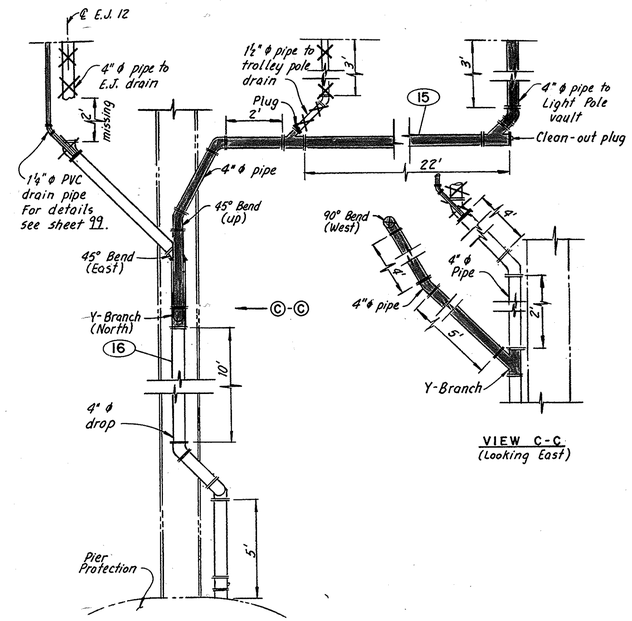

REF. 15 & 16 - SHEET 55
COLUMN P128
(Looking South)

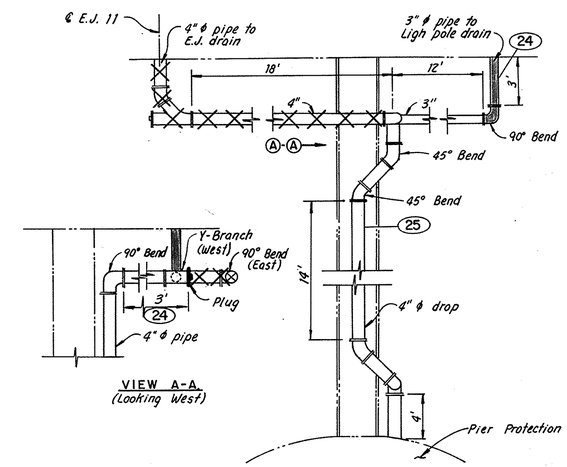

REF. 24 & 25 - SHEET 55
COLUMN P117
(Looking South)

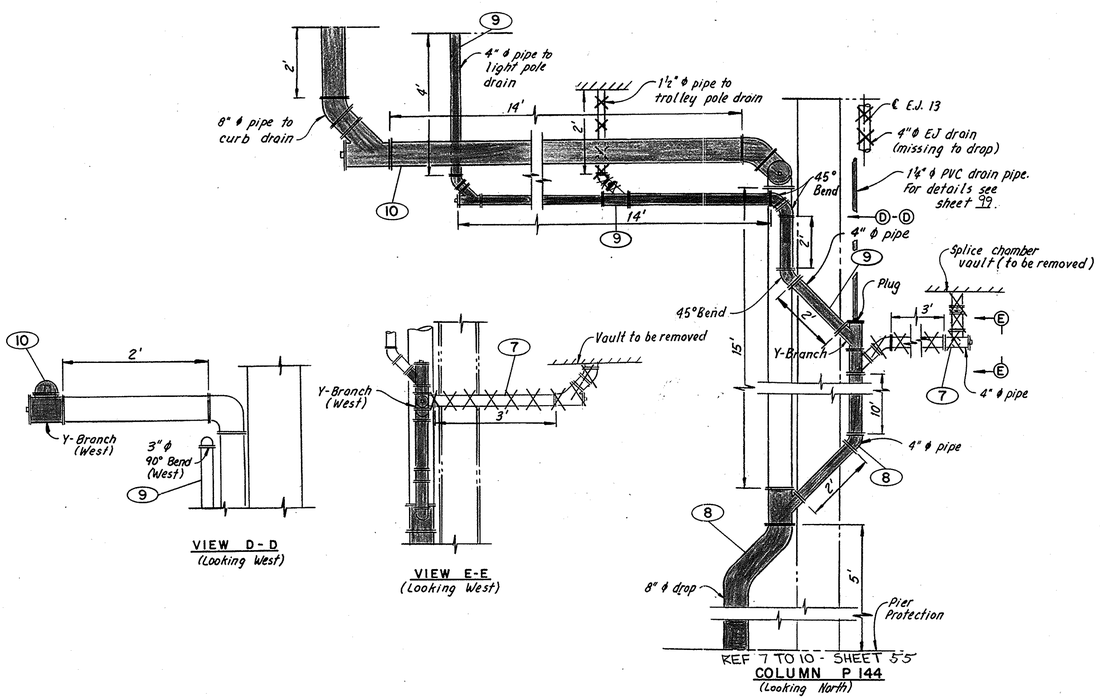

REF 7 TO 10 - SHEET 55
COLUMN P144
(Looking North)

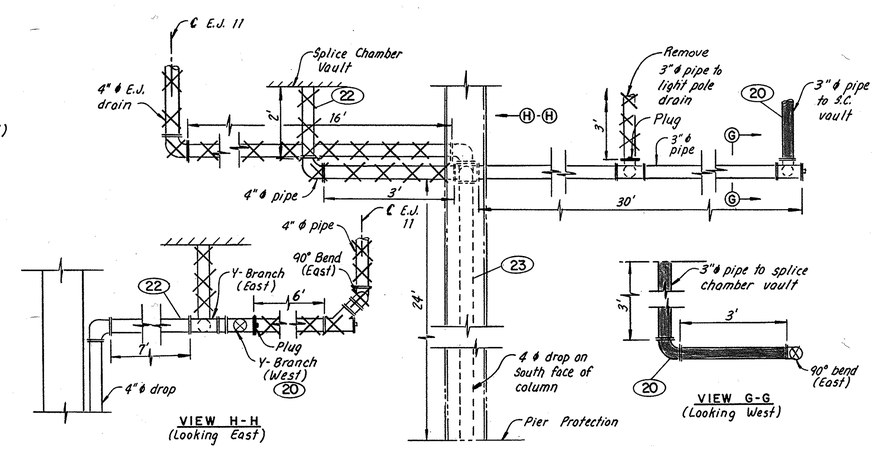

REF. 20 TO 23 SHEET 55
COLUMN P114
(Looking South)

NOTES:
1. For Estimated Quantities, see Sheet 55.
2. For Miscellaneous Drainage Details see Sheet 98.

LEGEND
- Remove pipe
- Clean and paint pipe
- Replace pipe
- (0) Drainage Reference No.

Superseded by sheet 91S, 1-31-85

EUTHENICS INC.
CONSULTING ENGINEERS
CLEVELAND OHIO

REHABILITATION OF TOWER CITY BRIDGES
PROSPECT AVE., HURON ROAD,
WEST 2ND., 3RD. & 6TH. ST. VIADUCTS

DRAINAGE DETAILS
UNIT 2 AND UNIT 3

PROSPECT AVE.
CLEVELAND CUYAHOGA COUNTY OHIO

Mode REM	Trcd. REM	Ckd. LJD	Rev. RAB	Scale: ¼" = 1'-0"
Date 4-5-78	Date 4-12-78	Date 2-2-82	Date 10-26-82	Sheet 91/170

FHWA REGION	STATE	PROJECT	
5	OHIO	IX-ID99(9)	

918

CUYAHOGA COUNTY
HURON/PROSPECT BRIDGE

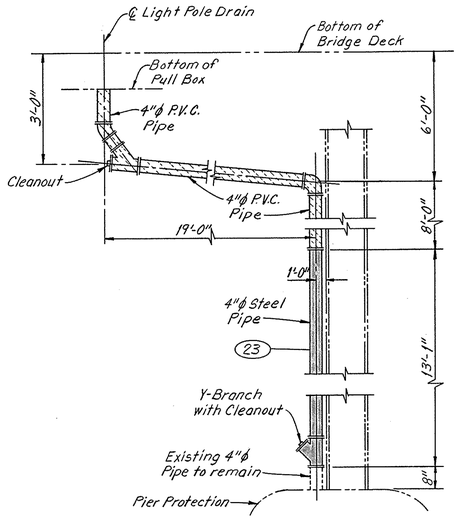

COLUMN P114
(Looking North)

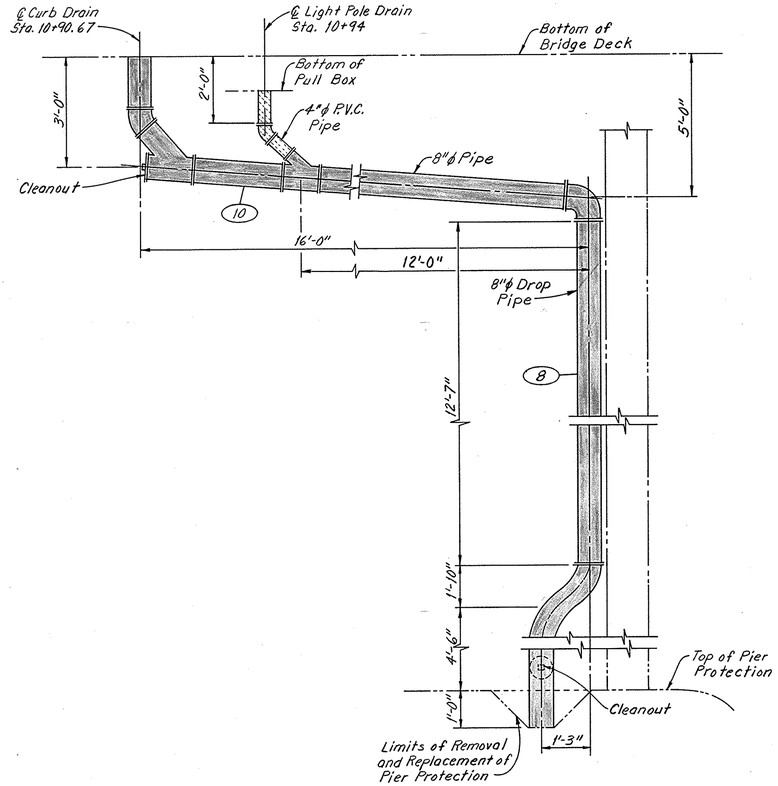

COLUMN P144
(Looking North)

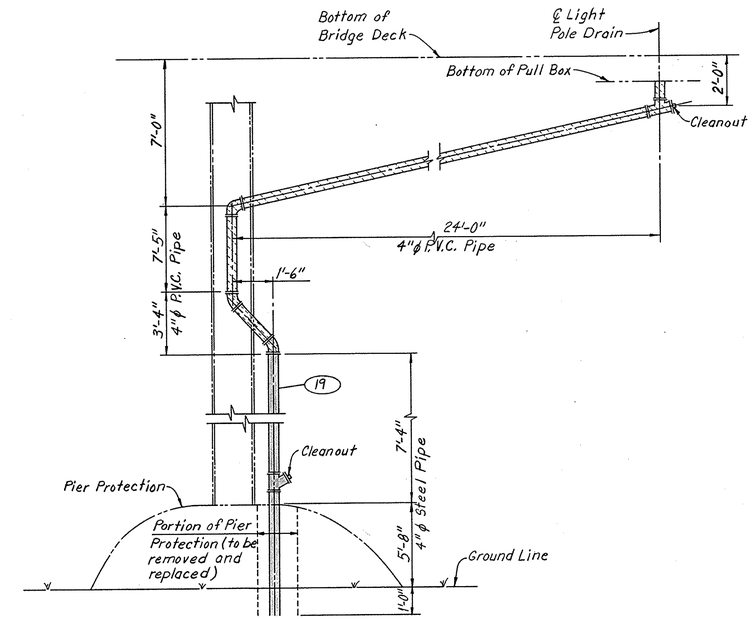

COLUMN P130
(Looking South)

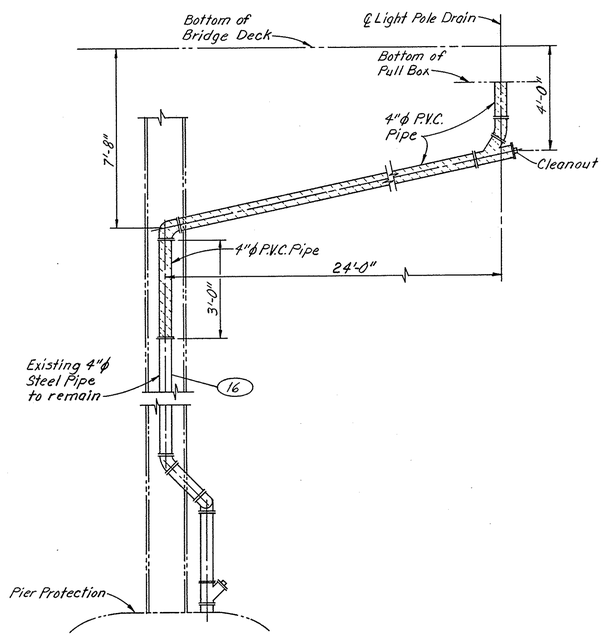

COLUMN P128
(Looking South)

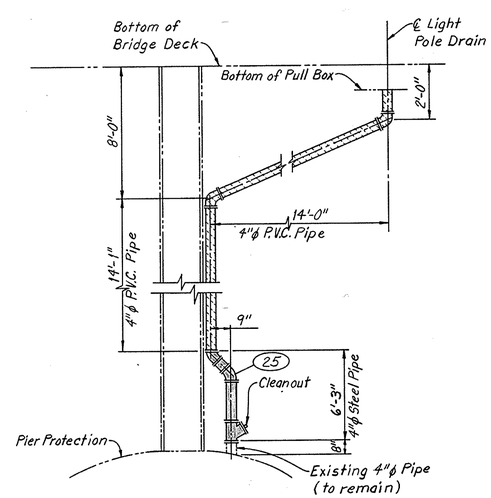

COLUMN P117
(Looking South)

LEGEND

- Indicates P.V.C. Pipe
- Indicates Steel Pipe to be replaced
- Indicates Steel Pipe to be cleaned and painted

(O) **ESTIMATED DRAINAGE QUANTITIES**

REF. NO.	DESCRIPTION	ITEM SPECIAL CLEAN & PAINT EXIST. PIPE (LIN. FT.) PIPE SIZE (IN.)					ITEM 518 PIPE REPLACEMENT (LIN. FT.) PIPE SIZE (IN.)					FOR DETAILS SEE SHEET	DROP LOCATION
			3	4	8			3	4	8	4"P.V.C.		
23	L.P. Drain			1					14		29		P114
25	L.P. Drain			1					7		31		P117
16	L.P. Drain			18							31		P128
19	L.P. Drain								14		38		P130
8	L.P. & Curb Drain									40	4		P144
	Totals			20					35	40	133		

Supersedes sheet 91, 1-31-85

EUTHENICS INC.
CONSULTING ENGINEERS
CLEVELAND OHIO

REHABILITATION OF TOWER CITY BRIDGES
PROSPECT AVE., HURON ROAD,
WEST 2 ND., 3 RD. & 6 TH. ST. VIADUCTS

DRAINAGE DETAILS

UNIT 2 AND UNIT 3
PHASE III
PROSPECT AVE.

CLEVELAND CUYAHOGA COUNTY OHIO

Mode JSC	Trcd. JSC	Ckd. LJD	Rev. RAB	Scale:
Date 1-18-85	Date 1-18-85	Date 1-21-85	Date 1-22-85	Sheet 91S

ODOT 1-29-85 TES

FHWA REGION	STATE	PROJECT	
5	OHIO	M-ID 99 (9)	

92/170

CUYAHOGA COUNTY
HURON / PROSPECT BRIDGE

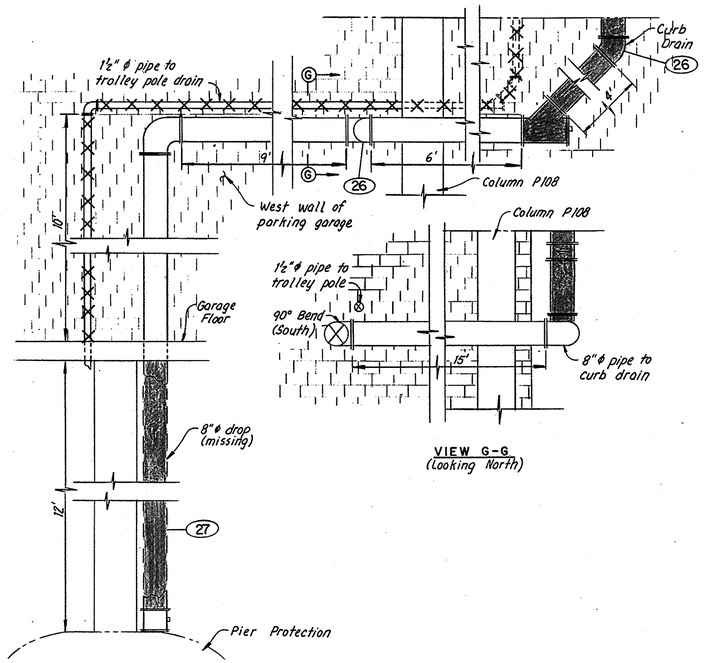

VIEW G-G
(Looking North)

REF. 26 & 27 - SHEET 55
COLUMN P111
(Looking West)

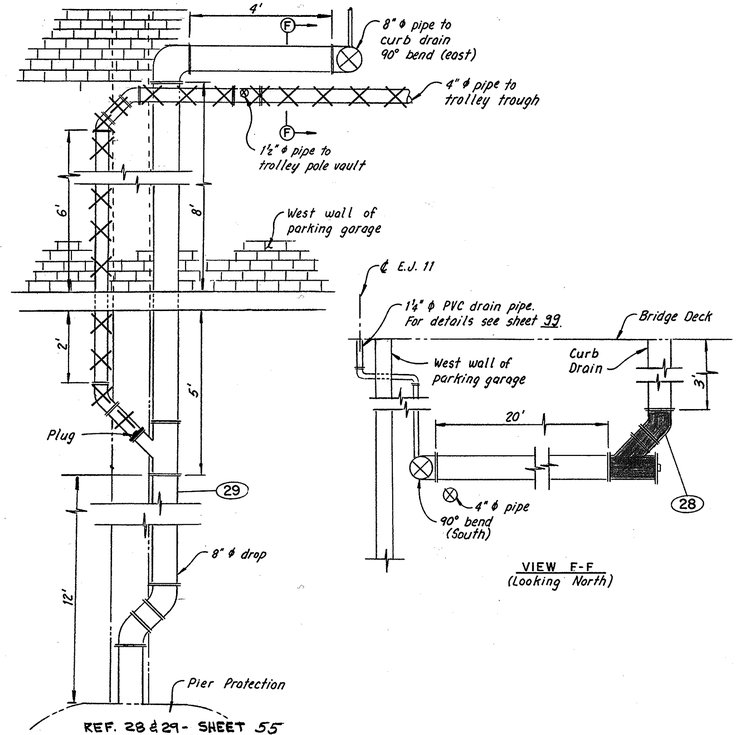

VIEW F-F
(Looking North)

REF. 28 & 29 - SHEET 55
COLUMN P113
(Looking West)

NOTES:
1. For Estimated Quantities, see Sheet 55.
2. For Miscellaneous Drainage Details see Sheet 98.

LEGEND

- Remove pipe
- Clean and paint pipe
- Replace pipe
- (0) Drainage Reference No.

Superseded by sheet 92S, 2-25-85

EUTHENICS INC.
CONSULTING ENGINEERS
CLEVELAND OHIO

REHABILITATION OF TOWER CITY BRIDGES
PROSPECT AVE., HURON ROAD,
WEST 2ND., 3RD. & 6TH. ST. VIADUCTS

DRAINAGE DETAILS

UNIT 4

PROSPECT AVE.

CLEVELAND CUYAHOGA COUNTY OHIO

Made REM	Trcd. REM	Ckd. LJD	Rev. RAB	Revised
Date 4-4-78	Date 4-12-78	Date 1-13-82	Date 10-11-82	Sheet 92/170

FHWA REGION	STATE	PROJECT	
5	OHIO	IX-ID99(9)	

92S

CUYAHOGA COUNTY
HURON/PROSPECT BRIDGE

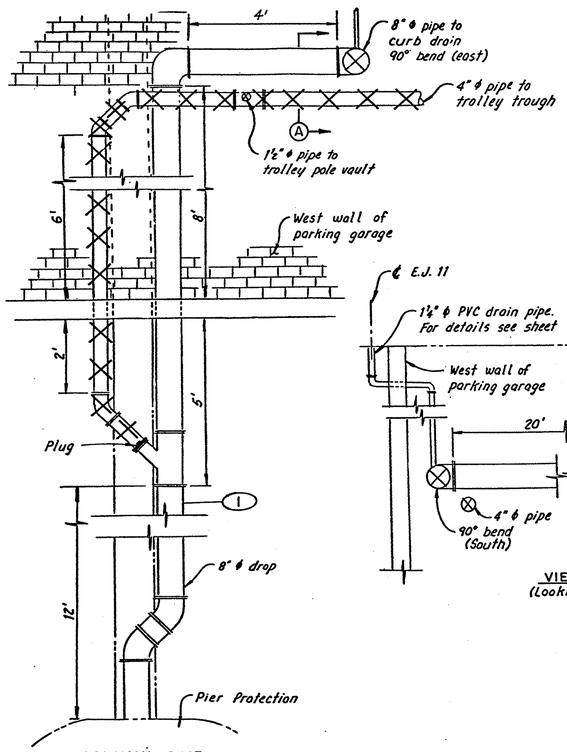

COLUMN P113
(Looking West)

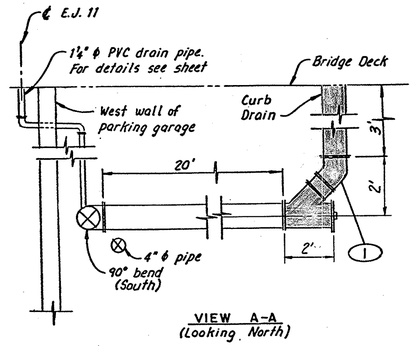

VIEW A-A
(Looking North)

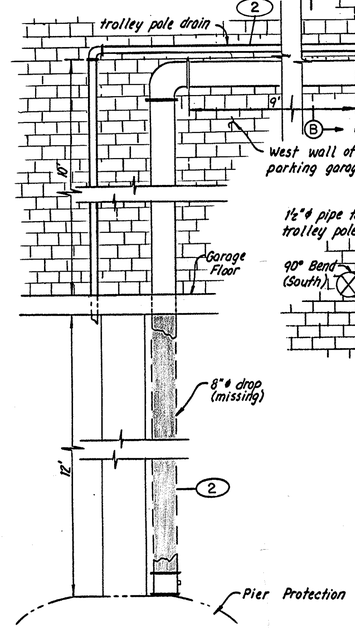

COLUMN P111
(Looking West)

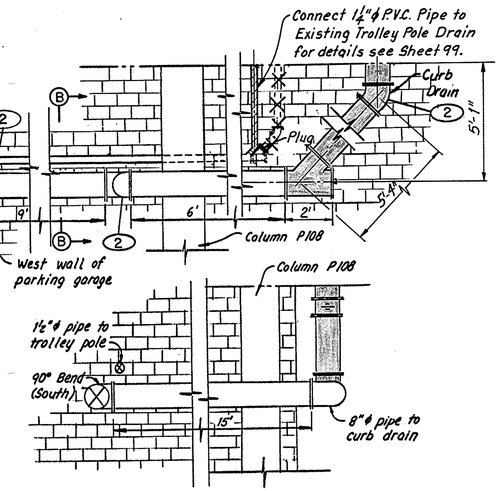

VIEW B-B
(Looking North)

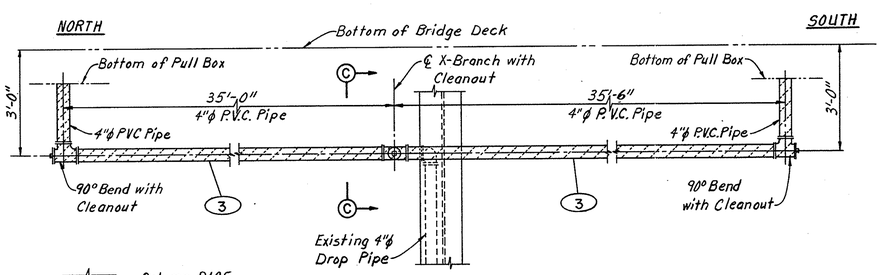

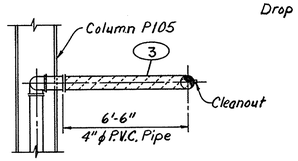

SECTION C-C
(Looking South)

COLUMN P105
(Looking East)

LEGEND

- ~~XXXX~~ Indicates Pipes to be removed
- Indicates P.V.C. Pipes
- Indicates Steel Pipe to be replaced
- Indicates Steel Pipe to be cleaned & painted

NOTE:
For Location of drops see Plan on Sheet 54A.

0 ESTIMATED DRAINAGE QUANTITIES												
REF. NO.	DESCRIPTION	ITEM SPECIAL CLEAN & PAINT EXIST. PIPE (LIN. FT.)				ITEM 518 PIPE REPLACEMENT (LIN. FT.)					FOR DETAILS SEE SHEET	DROP LOCATION
		PIPE SIZE (IN.)				PIPE SIZE (IN.)						
			3	4	8	1¼" P.V.C.	3	4	8	4" P.V.C.		
1	Curb Drain & Drop				52				7			P113
2	Curb Drain & Drop		29		30				20			P111
3	Light Pole Drains			10				82				P105
	Totals		29	10	82			82	27			

EUTHENICS INC.
CONSULTING ENGINEERS
CLEVELAND OHIO

REHABILITATION OF TOWER CITY BRIDGES
PROSPECT AVE., HURON ROAD,
WEST 2 ND., 3 RD. & 6 TH. ST. VIADUCTS

DRAINAGE DETAILS
UNIT 4

PROSPECT AVE.

CLEVELAND CUYAHOGA COUNTY OHIO

Made JSC	Trcd. JSC	Ckd. LJD	Rev. RAB	Scale:
Date 2-5-85	Date 2-5-85	Date 2-6-85	Date 2-7-85	Sheet 92 S

Supersedes sheet 92, 2-25-85

ODOT 2-16-85 TES

FHWA REGION	STATE	PROJECT	
5	OHIO	IX-ID99(9)	

93A

CUYAHOGA COUNTY
HURON/PROSPECT BRIDGE

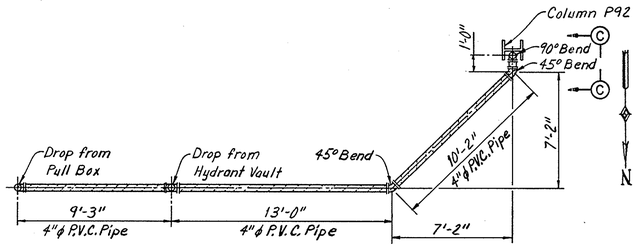

PLAN

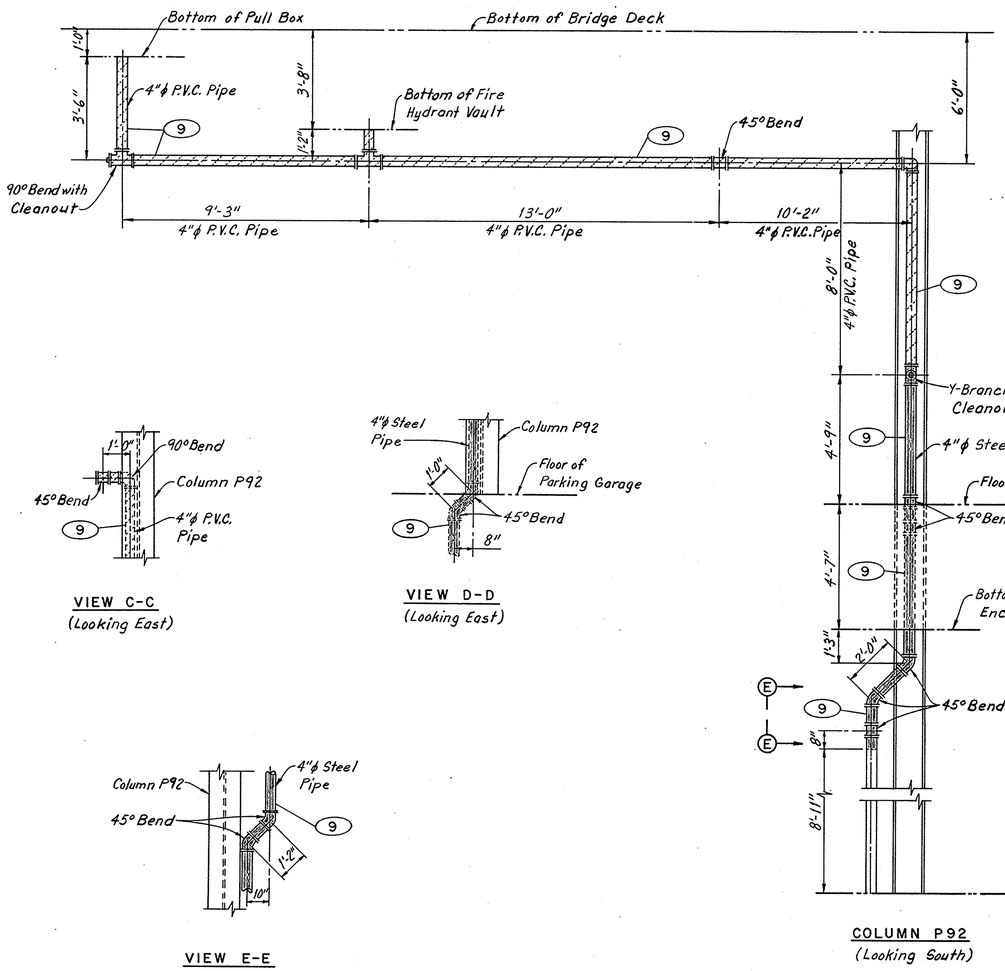

VIEW C-C
(Looking East)

VIEW D-D
(Looking East)

VIEW E-E
(Looking West)

COLUMN P92
(Looking South)

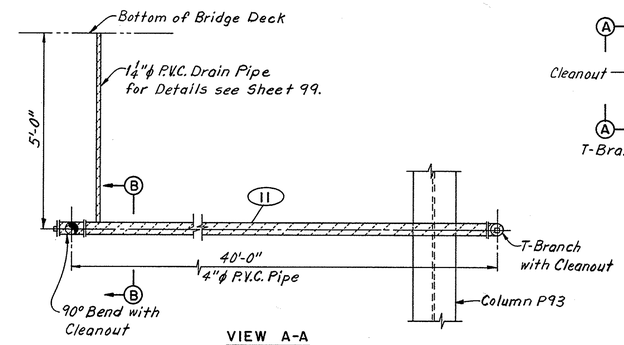

VIEW A-A
(Looking West)

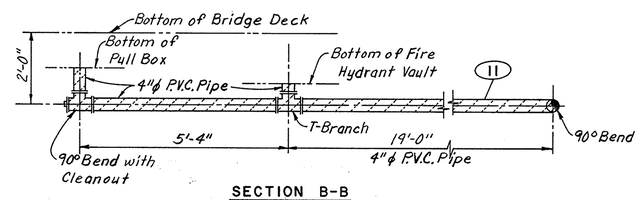

SECTION B-B
(Looking South)

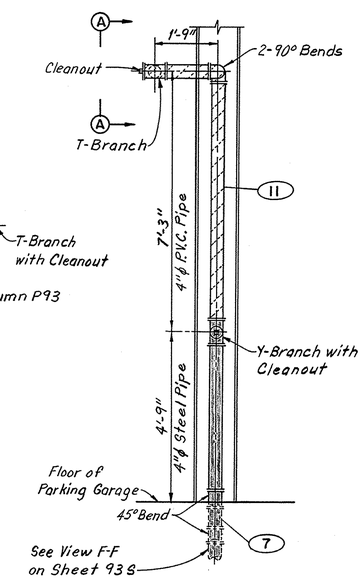

COLUMN P93
(Looking South)

LEGEND

- Indicates Pipes to be removed
- Indicates P.V.C. Pipes
- Indicates Steel Pipe to be replaced
- Indicates Steel Pipe to be cleaned & painted

NOTE:
For Location of drops see Plan on Sheet 54A.

ESTIMATED DRAINAGE QUANTITIES

REF. NO.	DESCRIPTION	ITEM SPECIAL CLEAN & PAINT EXIST. PIPE (LIN. FT.) PIPE SIZE (IN.)					ITEM 518 PIPE REPLACEMENT (LIN. FT.) PIPE SIZE (IN.)					FOR DETAILS SEE SHEET	DROP LOCATION
			3	4	8		1¼" P.V.C.	3	4	8	4" P.V.C.		
9	Light Pole, Hydrant & Drop			9					16	47			P92
11	Light Pole, Hydrant & Drop								5	77			P93
	Totals			9					21	124			

Added 2-25-85

EUTHENICS INC.
CONSULTING ENGINEERS
CLEVELAND OHIO

REHABILITATION OF TOWER CITY BRIDGES
PROSPECT AVE., HURON ROAD,
WEST 2ND., 3RD. & 6TH. ST. VIADUCTS

DRAINAGE DETAILS
UNIT 6
PROSPECT AVE.

CLEVELAND CUYAHOGA COUNTY OHIO

Made JSC	Trcd. JSC	Ckd. LJD	Rev. RAB	Scale:
Date 2-5-85	Date 2-5-85	Date 2-6-85	Date 2-7-85	Sheet 93A

ODOT 2-16-85 TES

FHWA REGION	STATE	PROJECT	
5	OHIO	IX-ID99(9)	

93S

CUYAHOGA COUNTY
HURON/PROSPECT BRIDGE

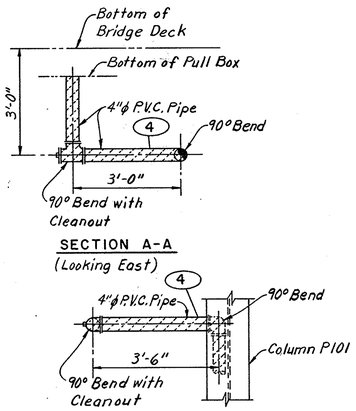

SECTION A-A
(Looking East)

VIEW B-B
(Looking East)

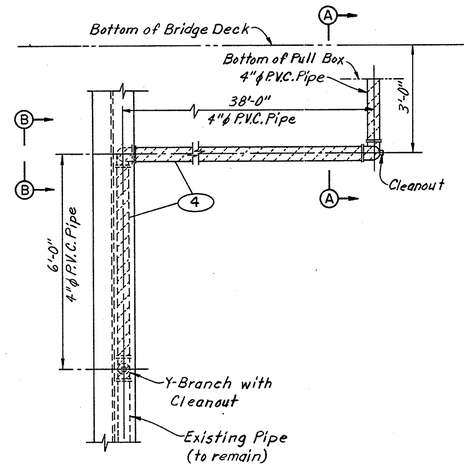

COLUMN P101
(Looking North)

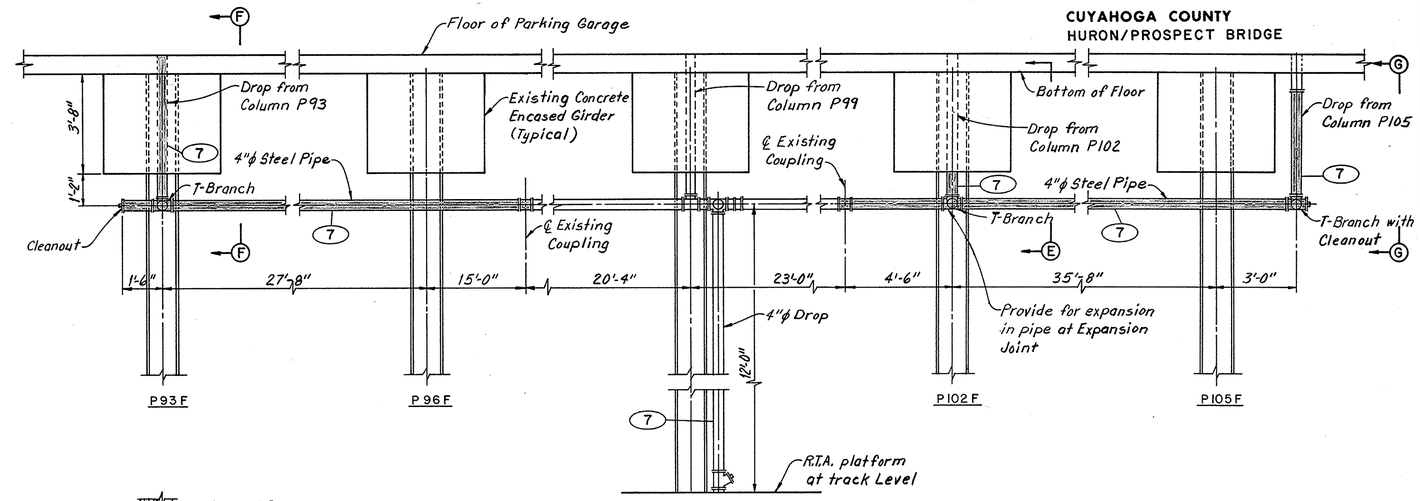

COLUMN P99F
(Looking South)

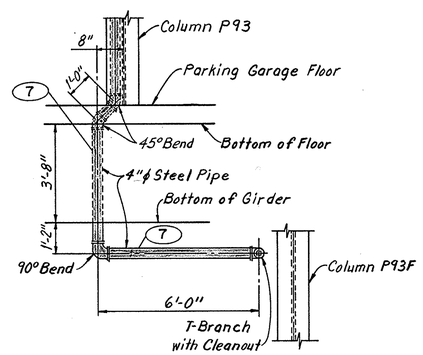

VIEW F-F
(Looking East)

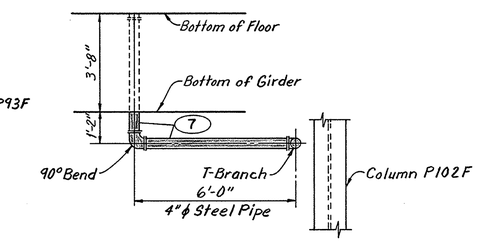

VIEW E-E
(Looking East)

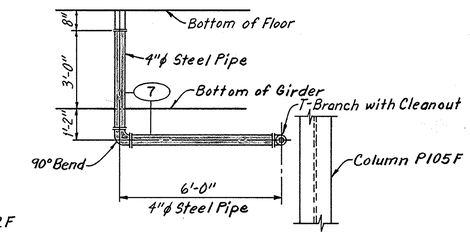

VIEW G-G
(Looking East)

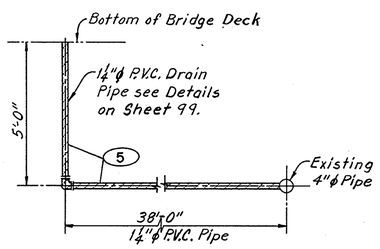

VIEW C-C
(Looking West)

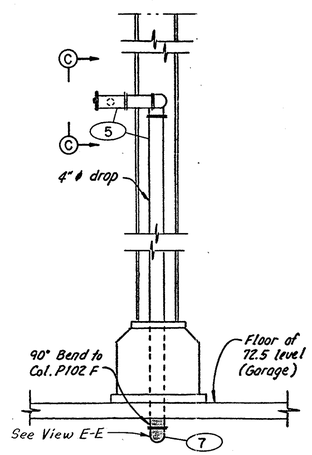

COLUMN P102 – 72.5 LEVEL
(Looking South)

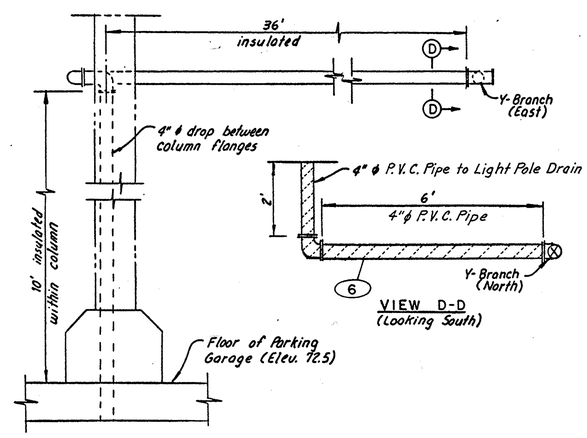

VIEW D-D
(Looking South)

COLUMN P99 – 72.5 LEVEL
(Looking East)

NOTE:
For Location of drops see Plan on Sheet 54A.

LEGEND

- Indicates Pipes to be removed
- Indicates P.V.C. Pipes
- Indicates Steel Pipe to be replaced
- Indicates Steel Pipe to be cleaned & painted

0 ESTIMATED DRAINAGE QUANTITIES

REF. NO.	DESCRIPTION	ITEM SPECIAL CLEAN & PAINT EXIST. PIPE (LIN. FT.) PIPE SIZE (IN.)					ITEM 518 PIPE REPLACEMENT (LIN. FT.) PIPE SIZE (IN.)					FOR DETAILS SEE SHEET	DROP LOCATION
			3	4	8		1¼"PVC	3	4	8	4"PVC		
4	Light Pole Drain			5							54		P101
5	Sub Surface Drains			19			43						P102
6	Light Pole Drain										9		P99
7	Drop @ Track Level			66					116				P99F
	Totals			90			43		116		63		

Supersedes sheet 93, 2-25-85

EUTHENICS INC.
CONSULTING ENGINEERS
CLEVELAND OHIO

REHABILITATION OF TOWER CITY BRIDGES
PROSPECT AVE., HURON ROAD,
WEST 2ND., 3RD. & 6TH. ST. VIADUCTS

DRAINAGE DETAILS
UNIT 5

PROSPECT AVE.
CLEVELAND CUYAHOGA COUNTY OHIO

Mode JSC	Trcd. JSC	Ckd. LJD	Rev. RAB	Scale:
Date 2-5-85	Date 2-5-85	Date 2-6-85	Date 2-7-85	Sheet 93 S

ODOT 2-16-85 TES

FHWA REGION	STATE	PROJECT	
5	OHIO	M-1D 99(9)	

93/170

CUYAHOGA COUNTY
HURON / PROSPECT BRIDGE

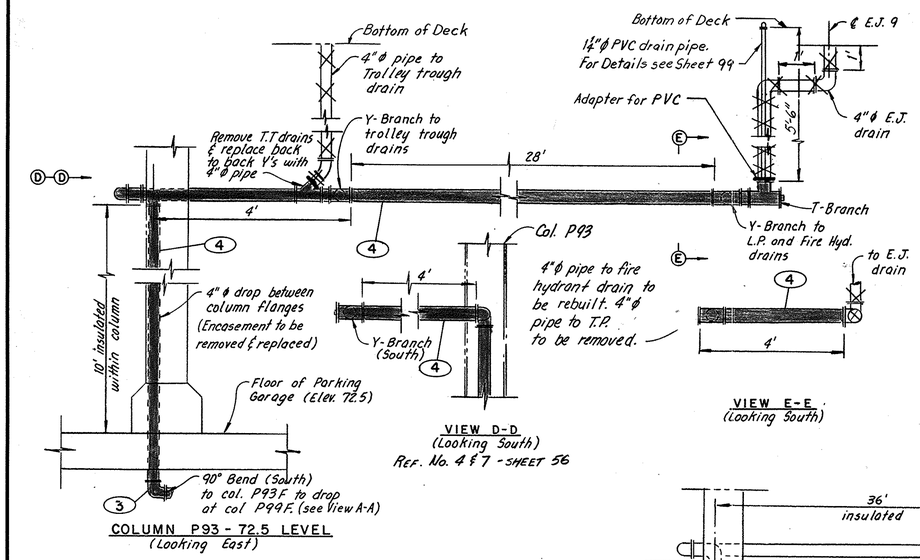

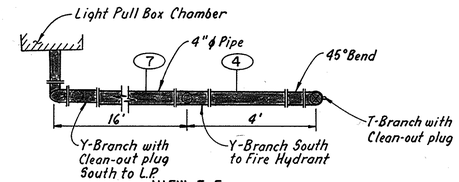

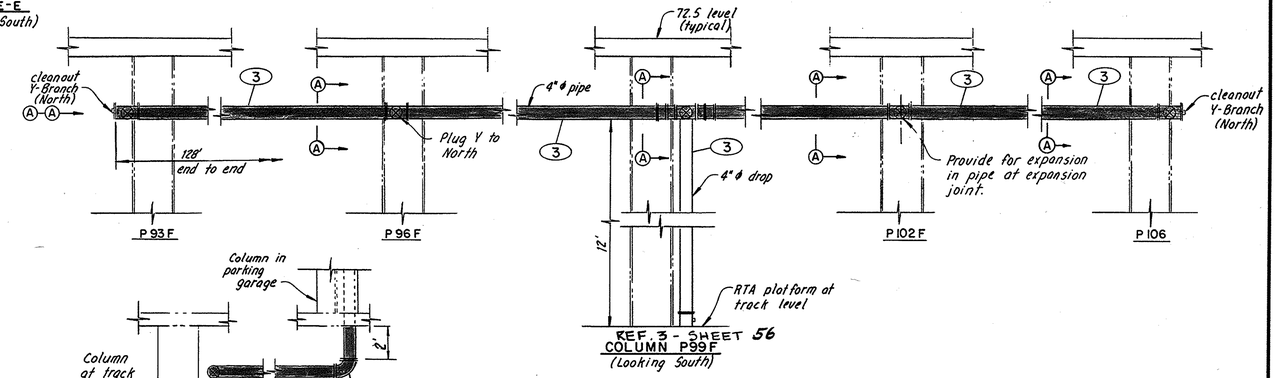

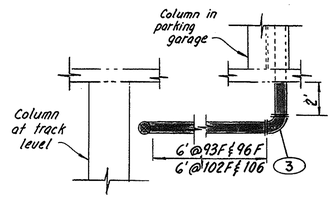

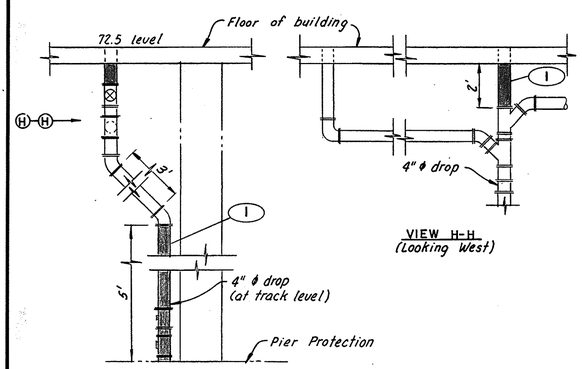

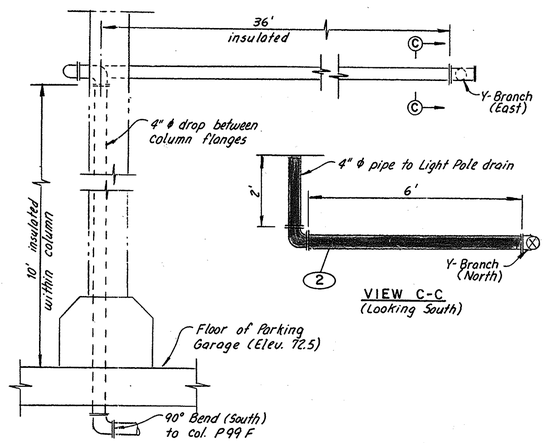

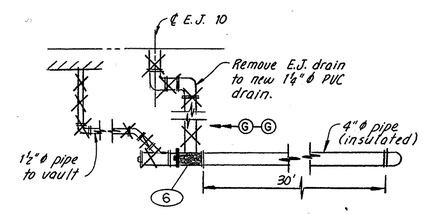

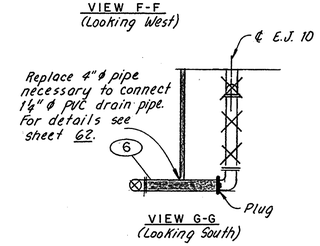

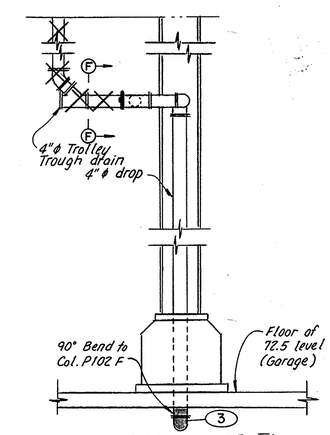

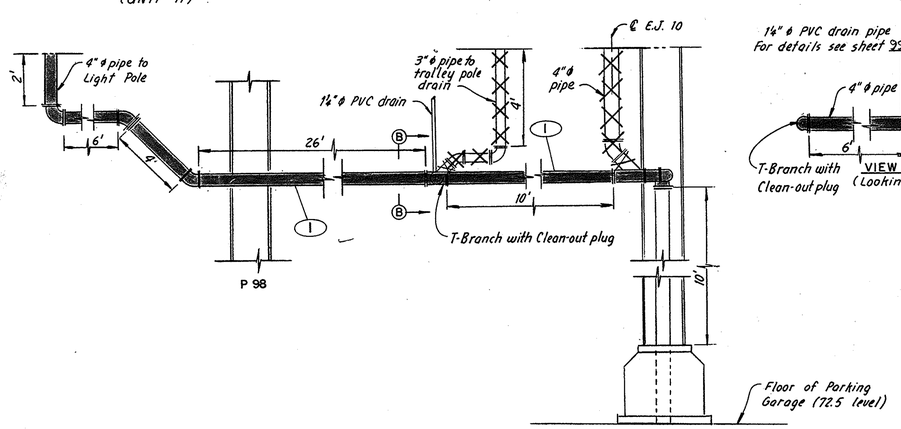

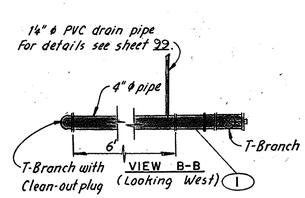

NOTES:
1. For Estimated Quantities see Sheet 56.
2. For Miscellaneous Drainage Details see Sheet 98.

LEGEND
- Remove Pipe
- Clean and Paint Pipe
- Replace Pipe
- (0) Drainage Reference No.

Superseded by sheet 93S, 2-25-85

EUTHENICS INC.
CONSULTING ENGINEERS
CLEVELAND OHIO

REHABILITATION OF TOWER CITY BRIDGES
PROSPECT AVE., HURON ROAD,
WEST 2ND., 3RD. & 6TH. ST. VIADUCTS

DRAINAGE DETAILS

UNIT 4 AND UNIT 5

PROSPECT AVE.

CLEVELAND CUYAHOGA COUNTY OHIO

Made REM	Trcd. REM	Ckd. LJD	Rev. RAB	Scale: ½"=1'-0"
Date 4-1-78	Date 4-8-78	Date 2-1-82	Date 10-26-82	Sheet 93/170

FHWA REGION	STATE	PROJECT	
5	OHIO	M-ID 99 (9)	

94/170

CUYAHOGA COUNTY
HURON / PROSPECT BRIDGE

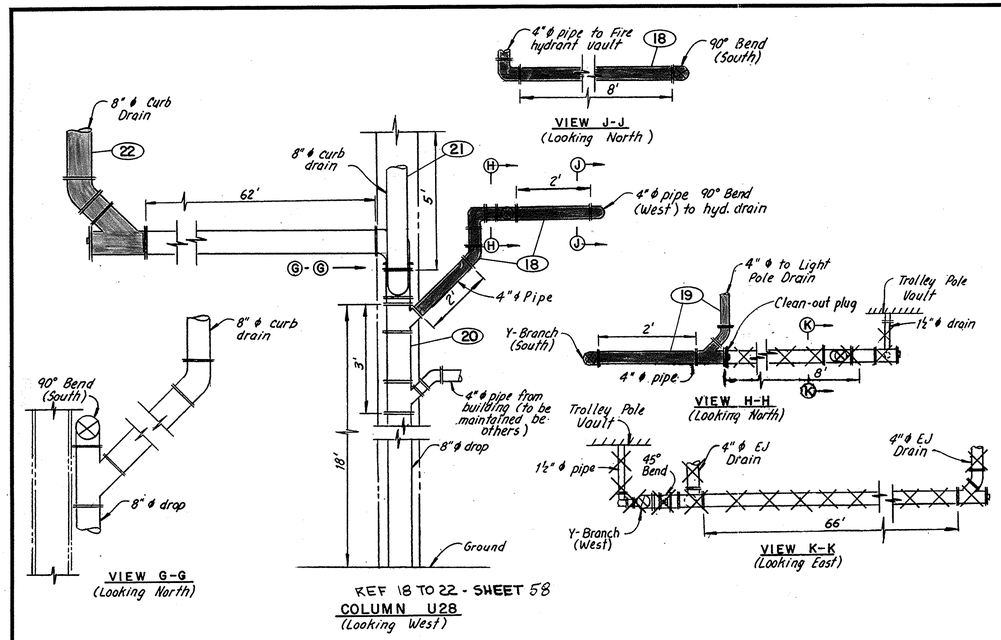

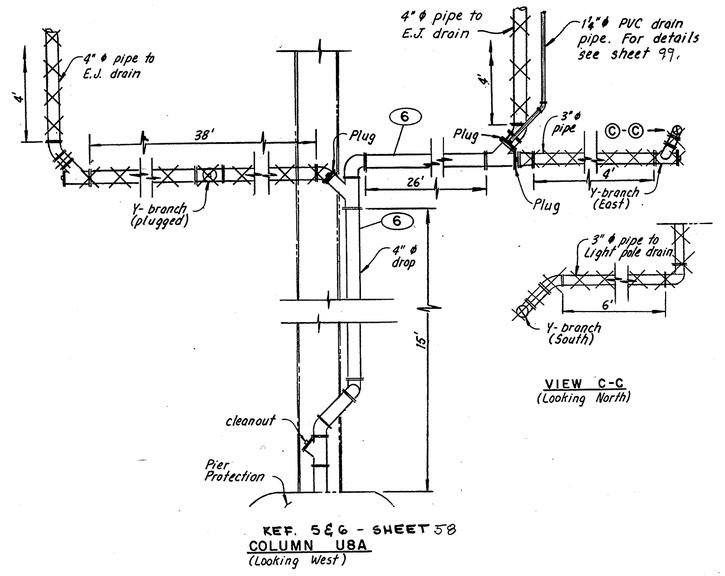

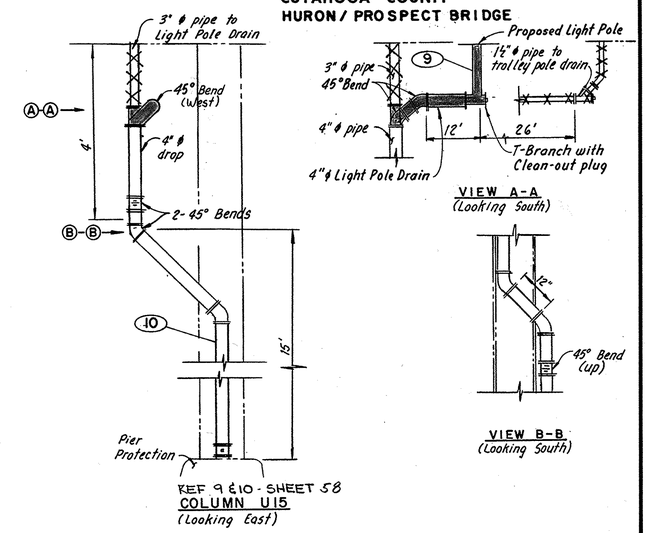

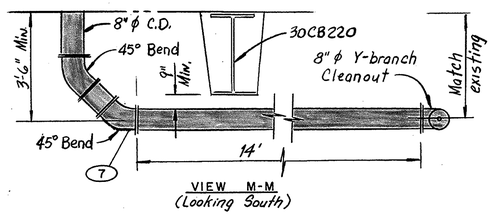

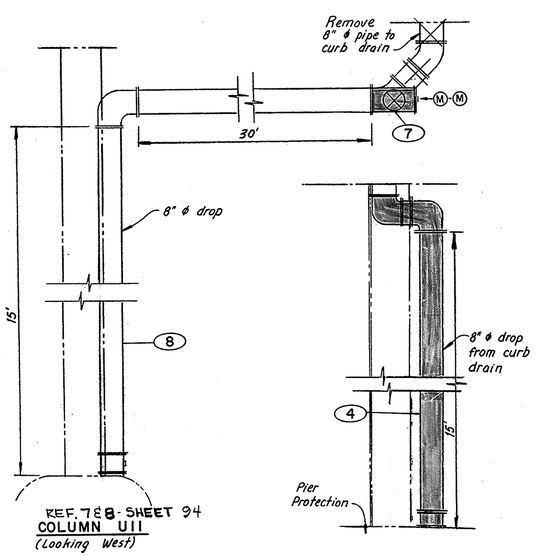

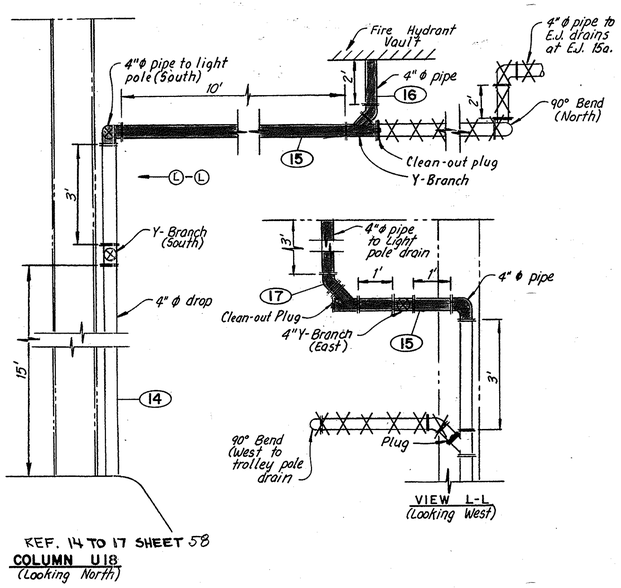

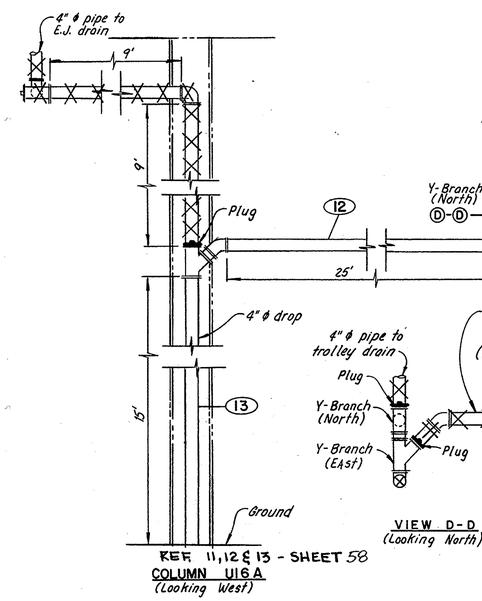

NOTES:
1. For Estimated Quantities, see Sheet 58.
2. For Miscellaneous Drainage Details see Sheet 98.

LEGEND
- Remove pipe
- Clean and paint pipe
- Replace pipe
- (0) Drainage Reference No.

EUTHENICS INC.
CONSULTING ENGINEERS
CLEVELAND OHIO

REHABILITATION OF TOWER CITY BRIDGES
PROSPECT AVE., HURON ROAD,
WEST 2ND., 3RD. & 6TH. ST. VIADUCTS

DRAINAGE DETAILS
UNIT 14 TO UNIT 17

HURON ROAD

CLEVELAND CUYAHOGA COUNTY OHIO

Made REM	Trcd. REM	Ckd. LJD	Rev. RAB	Scale. ½" = 1'-0"
Date 3-30-78	Date 4-6-78	Date 2-2-82	Date 10-26-82	Sheet 94/170

Superseded by sheet 94 S, 8-6-85

FHWA REGION	STATE	PROJECT	
5	OHIO	IX-ID99(9)	

945

CUYAHOGA COUNTY
HURON/PROSPECT BRIDGE

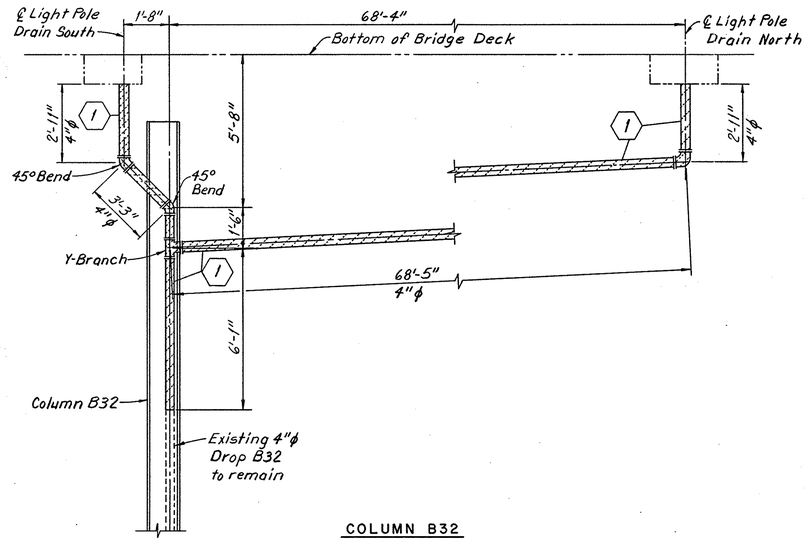

COLUMN B32
(Looking West)

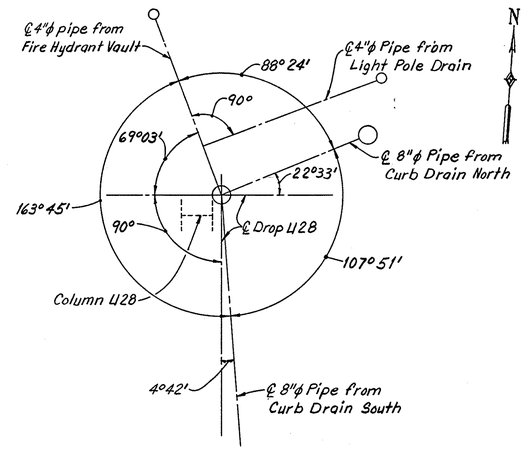

PLAN OF DROP AT COLUMN U28

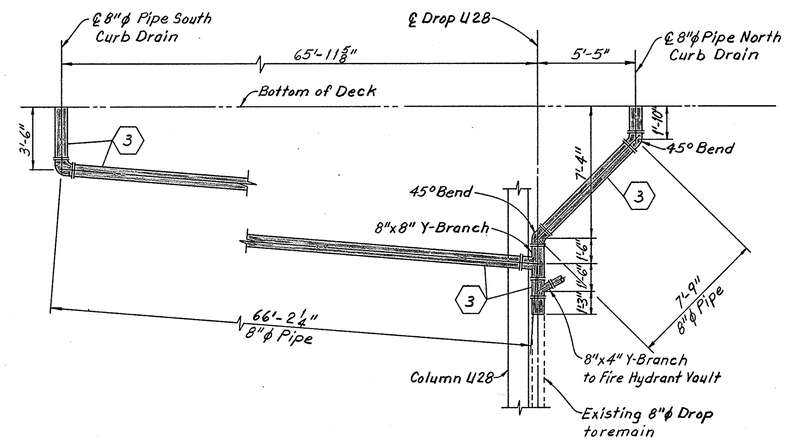

COLUMN U28
(Looking West)

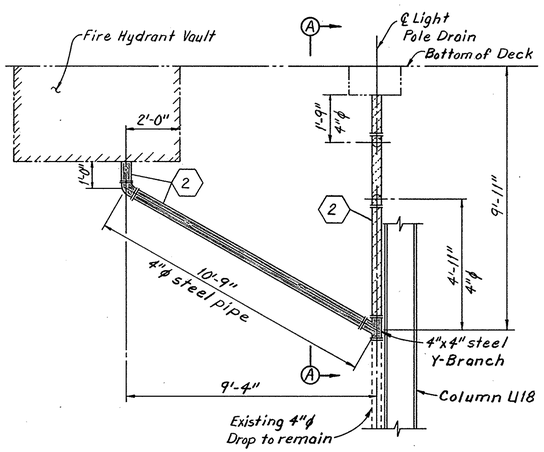

COLUMN U18
(Looking South)

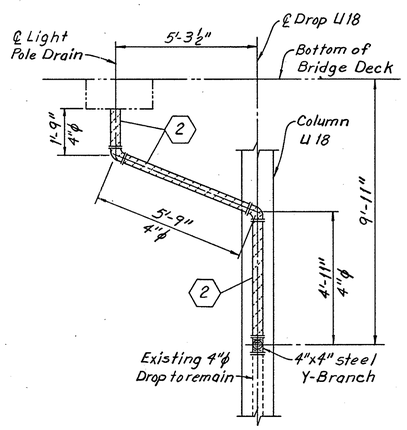

SECTION A-A
(Looking West)

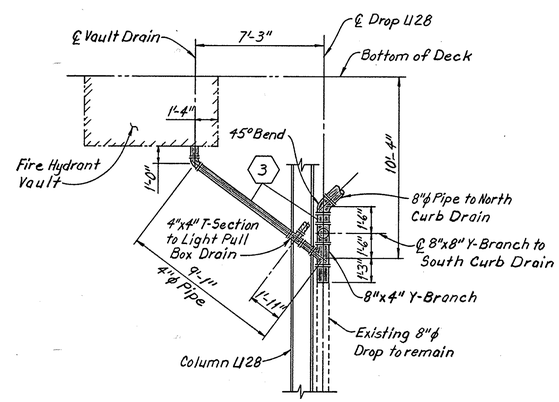

COLUMN U28
(Looking North)

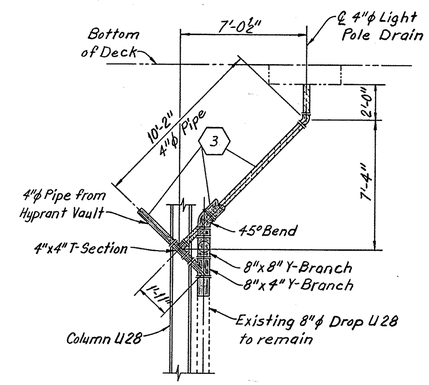

COLUMN U28
(Looking North)

LEGEND

- INDICATES PIPES TO BE REMOVED
- INDICATES P.V.C. PIPES
- INDICATES STEEL PIPE TO BE REPLACED
- INDICATES STEEL PIPE TO BE CLEANED & PAINTED

NOTES:

1) FOR PLAN LOCATION OF DROPS AND ESTIMATED QUANTITIES SEE SHEET 60C.
2) FOR MISCELLANEOUS DRAINAGE DETAILS SEE SHEET 98.

Supersedes sheet 94, 8-6-85

EUTHENICS INC.
CONSULTING ENGINEERS
CLEVELAND OHIO

REHABILITATION OF TOWER CITY BRIDGES
PROSPECT AVE., HURON ROAD,
WEST 2ND., 3RD. & 6TH. ST. VIADUCTS
DRAINAGE DETAILS
W. 6th. ST. & UNIT 17
PHASE IV
HURON RD.
CLEVELAND CUYAHOGA COUNTY OHIO

Mode JSC	Trcd. JSC	Ckd. LJD	Rev. RAB	Scale:
Date 6-24-85	Date 6-24-85	Date 6-25-85	Date 6-25-85	Sheet 94S

ODOT 6-26-85 TES

FHWA REGION	STATE	PROJECT	
5	OHIO	M-1D99 (9)	

95/170

CUYAHOGA COUNTY
HURON/ PROSPECT BRIDGE

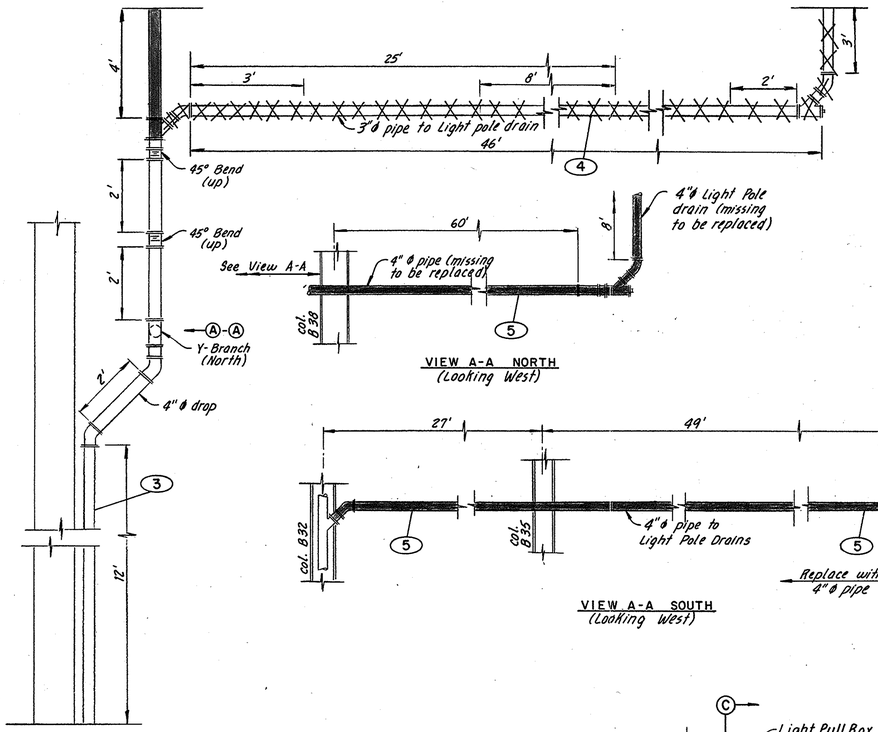

REF 3,4 & 5 SHEET 63
COLUMN B32 - BELOW W. 6TH ST.
(Looking North)

VIEW A-A NORTH
(Looking West)

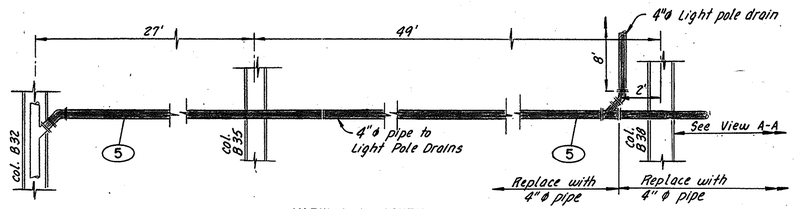

VIEW A-A SOUTH
(Looking West)

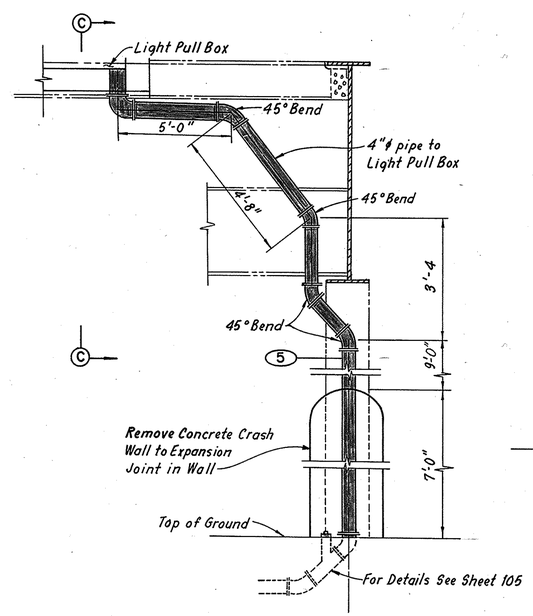

REF 5 - SHEET 58
COLUMN U6W - UNIT 15
(Looking South)

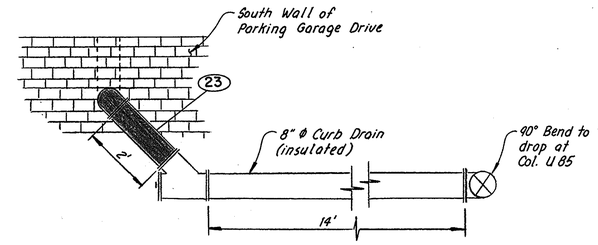

REF. 23 - SHEET 59
CURB DRAIN TO DROP AT COLUMN U85
(Looking South)

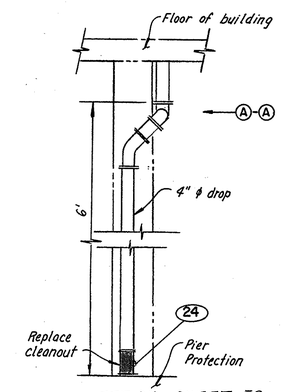

REF 24 SHEET 59
COLUMN U89
(Looking West)

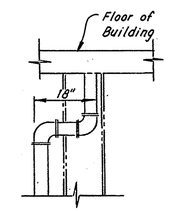

VIEW A-A
(Looking South)

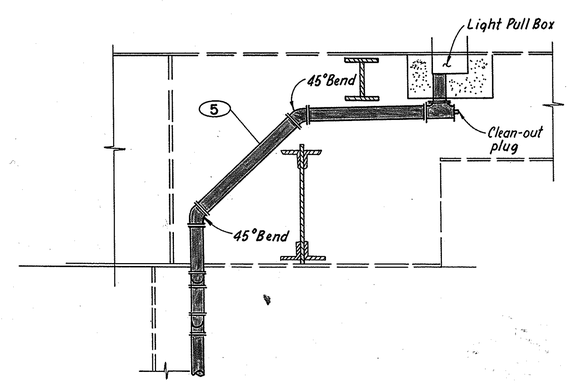

VIEW C-C
(Looking West)

NOTES:
1. For Estimated Quantities, see Sheets 59 & 63.
2. For Miscellaneous Drainage Details see Sheet 98.

LEGEND
- Remove pipe
- Clean and paint pipe
- Replace pipe
- (0) Drainage Reference No.

EUTHENICS INC.
CONSULTING ENGINEERS
CLEVELAND OHIO

REHABILITATION OF TOWER CITY BRIDGES
PROSPECT AVE., HURON ROAD,
WEST 2ND., 3RD. & 6TH. ST. VIADUCTS

DRAINAGE DETAILS
UNIT 18 TO UNIT 25
AND WEST 6th ST.

HURON ROAD
CLEVELAND CUYAHOGA COUNTY OHIO

Made REM	Trcd. REM	Ckd. LJD	Rev. RAB	Revised
Date 3-28-78	Date 4-7-81	Date 1-13-82	Date 10-11-82	Sheet 95/170

Superseded by sheet 95S, 8-6-85

FHWA REGION	STATE	PROJECT	
5	OHIO	IX-ID99(9)	

959

CUYAHOGA COUNTY
HURON/PROSPECT BRIDGE

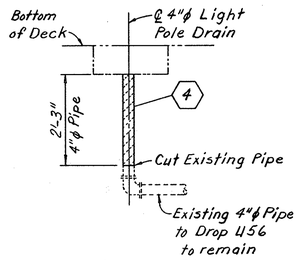

COLUMN U56
(Looking East)

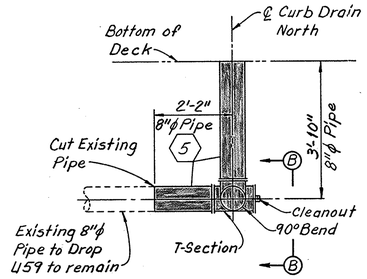

COLUMN U59
(Looking West)

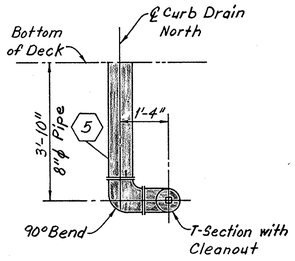

SECTION B-B
(Looking South)

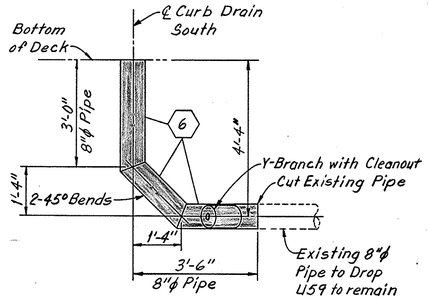

COLUMN U59
(Looking West)

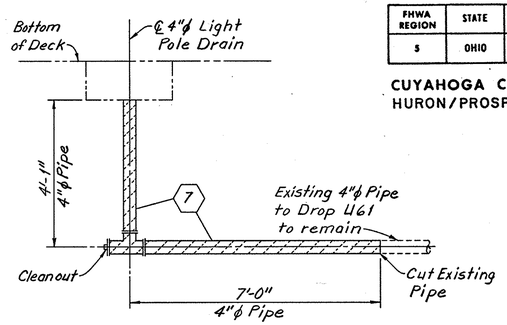

COLUMN U61
(Looking East)

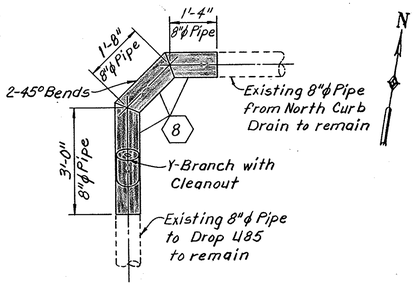

PLAN
COLUMN U85

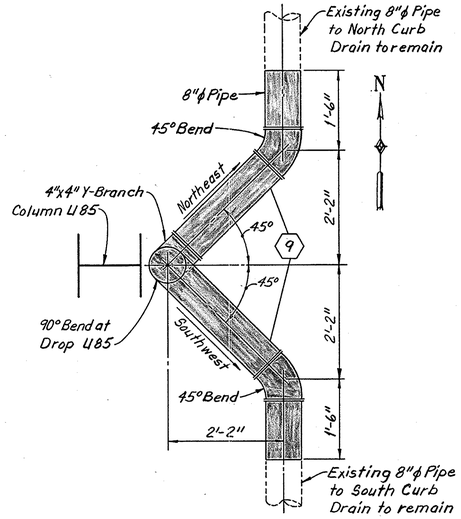

PLAN AT COLUMN U85

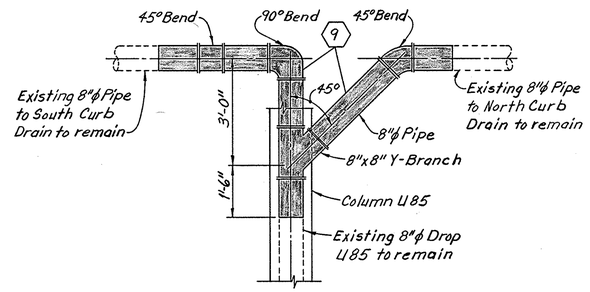

COLUMN U85
(Looking West)

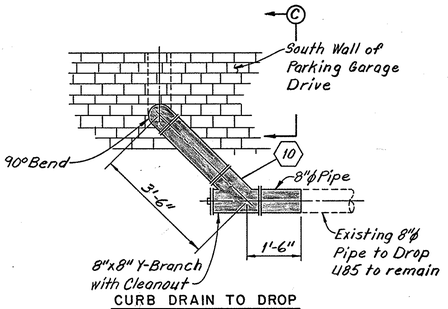

CURB DRAIN TO DROP
AT COLUMN U85
(Looking South)

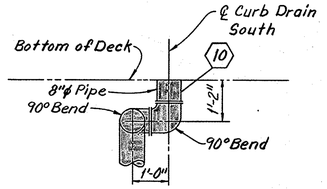

SECTION C-C
(Looking East)

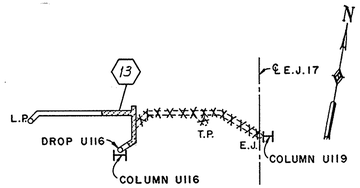

PLAN
COLUMN U116

LEGEND

- ~~XXXX~~ INDICATES PIPES TO BE REMOVED
- INDICATES P.V.C. PIPES
- INDICATES STEEL PIPE TO BE REPLACED
- INDICATES STEEL PIPE TO BE CLEANED & PAINTED

NOTES:

1) FOR PLAN LOCATION OF DROPS AND ESTIMATED QUANTITIES SEE SHEET 60C.
2) FOR MISCELLANEOUS DRAINAGE DETAILS SEE SHEET 98.

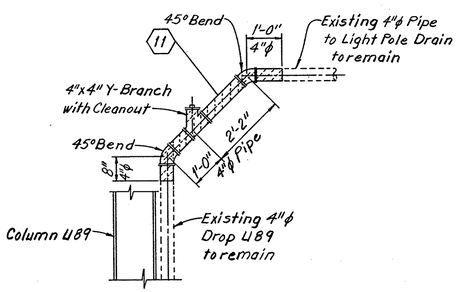

COLUMN U89
(Looking West)

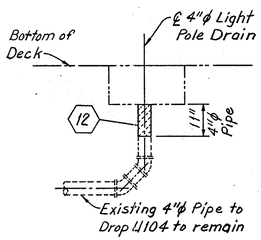

COLUMN U104
(Looking North)

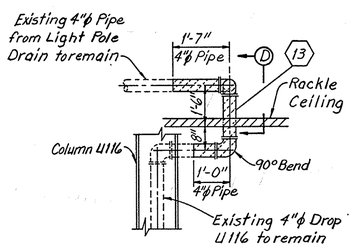

COLUMN U116
(Looking North)

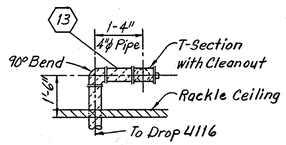

SECTION D-D
(Looking West)

Supersedes sheet 95, 8-6-85

EUTHENICS INC.
CONSULTING ENGINEERS
CLEVELAND OHIO

REHABILITATION OF TOWER CITY BRIDGES
PROSPECT AVE., HURON ROAD,
WEST 2ND., 3RD. & 6TH. ST. VIADUCTS
DRAINAGE DETAILS
UNIT 18 THRU UNIT 24
PHASE IV
HURON RD.

CLEVELAND CUYAHOGA COUNTY OHIO

Mode JSC	Trcd. JSC	Ckd. LJD	Rev. RAB	Scale:
Date 6-24-85	Date 6-24-85	Date 6-25-85	Date 6-25-85	Sheet 95S

ODOT 6-26-85 TES

FHWA REGION	STATE	PROJECT	
5	OHIO	M-1D 99(9)	

96
170

CUYAHOGA COUNTY
HURON / PROSPECT BRIDGE

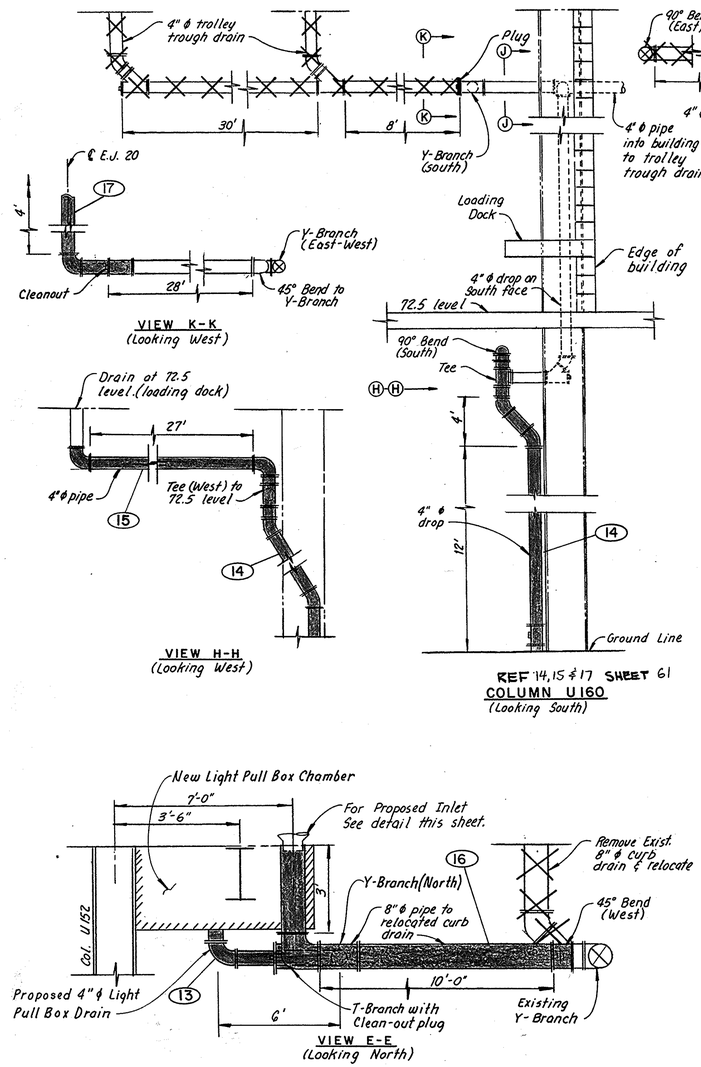

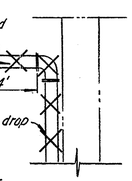

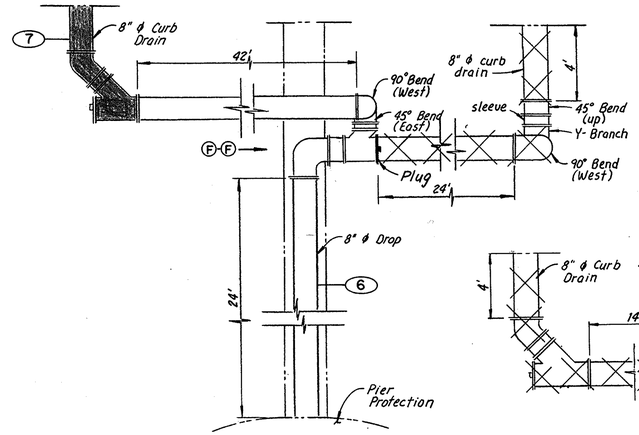

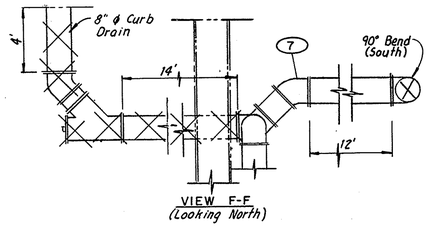

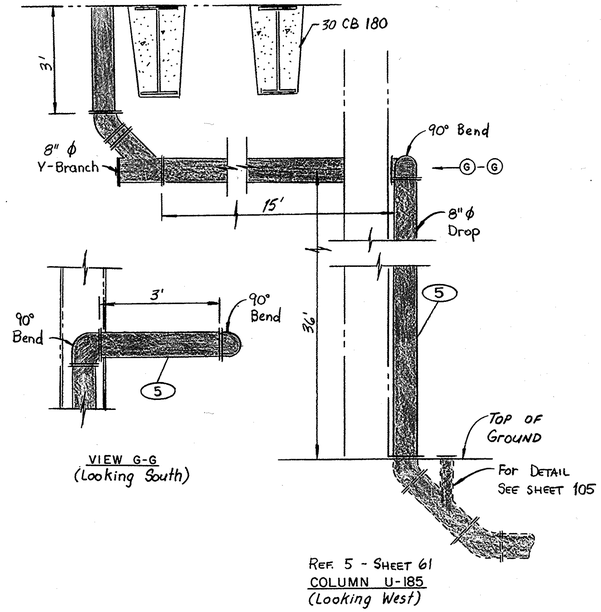

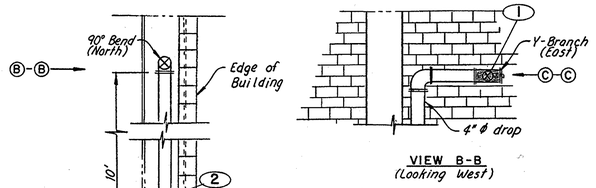

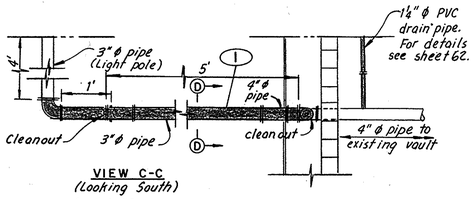

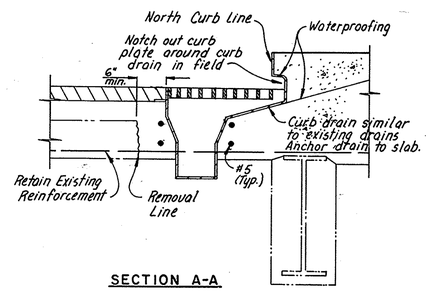

NOTES:

1. For Estimated Quantities, see Sheet 61.
2. For Miscellaneous Drainage Details see Sheet 98.

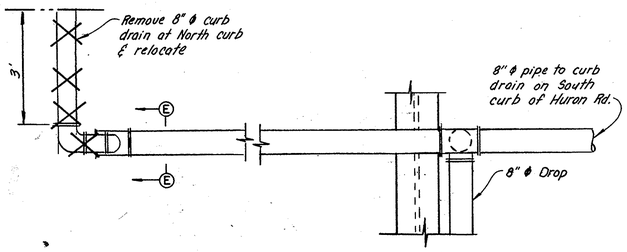

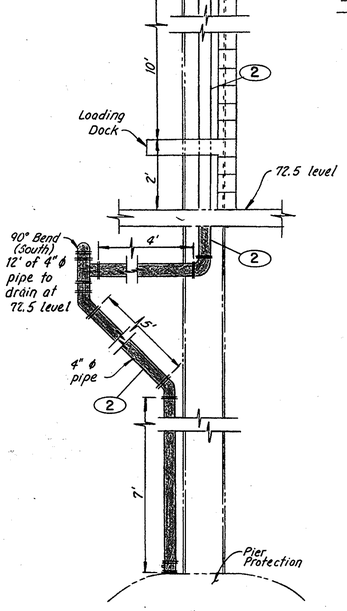

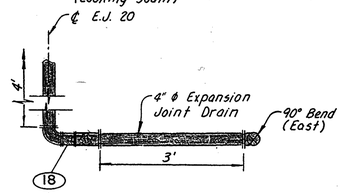

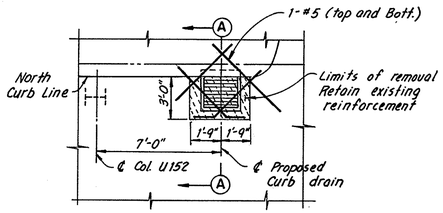

LEGEND

- Remove pipe
- Clean and paint pipe
- Replace pipe
- (0) Drainage Reference No.

EUTHENICS INC.
CONSULTING ENGINEERS
CLEVELAND OHIO

REHABILITATION OF TOWER CITY BRIDGES
PROSPECT AVE., HURON ROAD,
WEST 2ND., 3RD. & 6TH. ST. VIADUCTS

DRAINAGE DETAILS
UNIT 26 TO UNIT 28

HURON ROAD

CLEVELAND	CUYAHOGA COUNTY	OHIO
Mode REM	Trcd. REM	Chd. LJD	Rev. RAB	Scale: ½"=1'-0"
Date 3-25-78	Date 4-27-78	Date 2-3-82	Date 10-26-82	Sheet 96/170

Superseded by sheet 96S, 3-26-86

FHWA REGION	STATE	PROJECT	
5	OHIO	IX-ID99(9)	

96A
170

CUYAHOGA COUNTY
HURON/PROSPECT BRIDGE

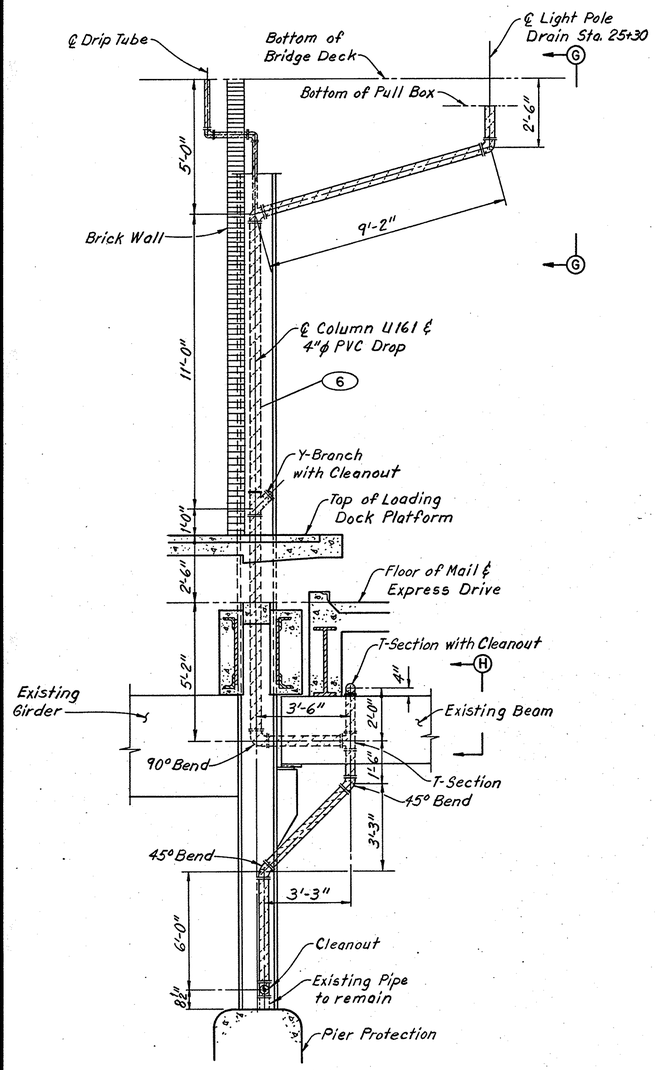

COLUMN U161
(Looking North)

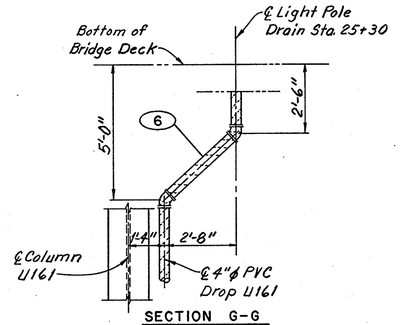

SECTION G-G
(Looking West)

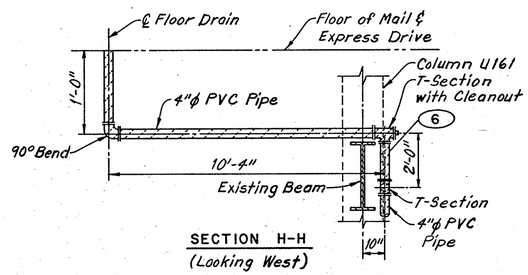

SECTION H-H
(Looking West)

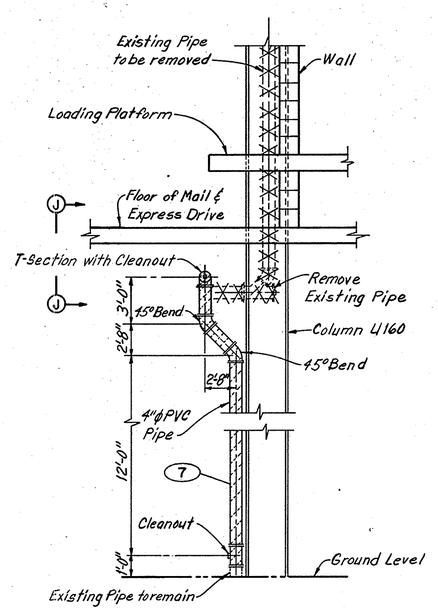

COLUMN U160
(Looking South)

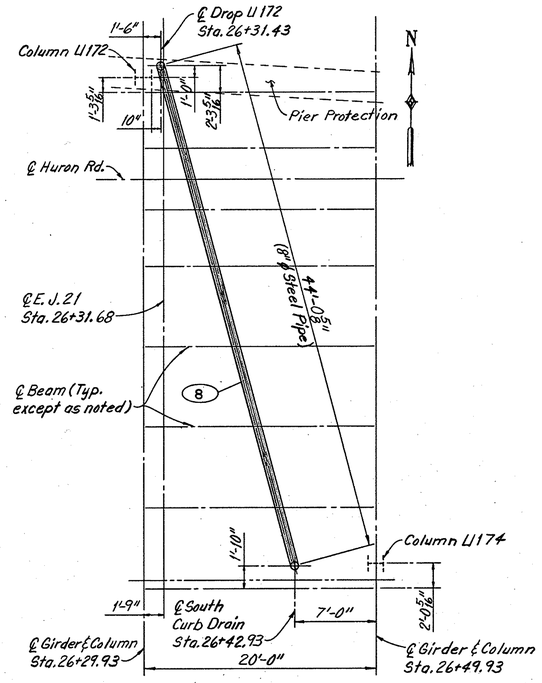

PLAN
(Column U172 Drop)

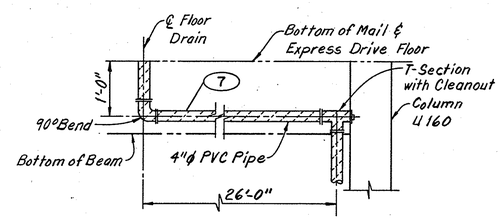

SECTION J-J
(Looking West)

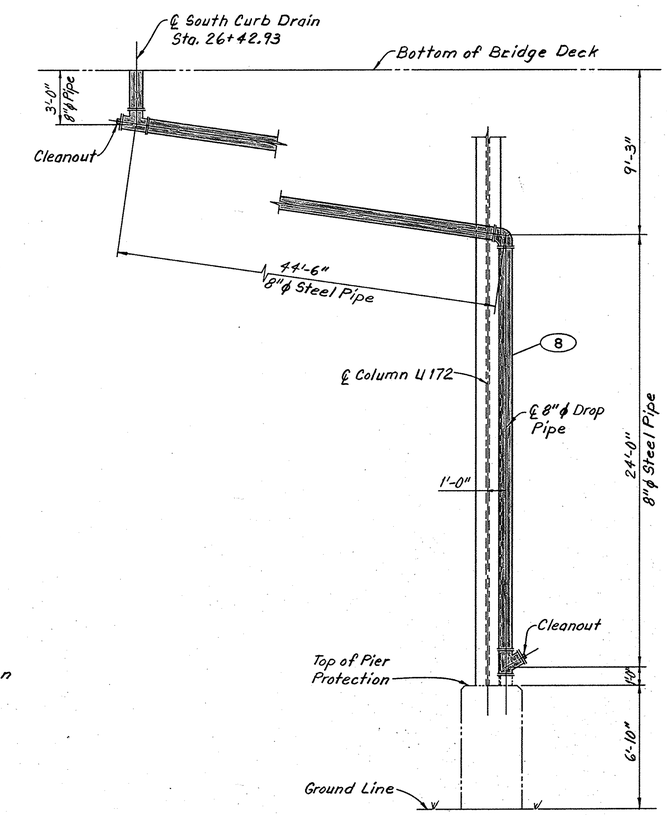

COLUMN U172
(Looking West)

NOTES:
1) For Location of Drops see Plan on Sheet 61B.
2) Dimensions to be verified by the Contractor.

LEGEND

- Indicates Pipes to be removed
- Indicates P.V.C. Pipes
- Indicates Steel Pipe to be replaced
- Indicates Steel Pipe to be cleaned & painted

Revised LJD 3-13-86

Sheet added 3-26-86

EUTHENICS INC.
CONSULTING ENGINEERS
CLEVELAND OHIO

REHABILITATION OF TOWER CITY BRIDGES
PROSPECT AVE., HURON ROAD,
WEST 2ND., 3RD. & 6TH. ST. VIADUCTS
DRAINAGE DETAILS
UNITS 25 TO 28 & W. 2nd. ST.
PHASE V
HURON RD.
CLEVELAND CUYAHOGA COUNTY OHIO

Mode JSC	Trcd. JSC	Ckd. LJD	Rev. RAB	Scale:
Date 2-27-86	Date 3-13-86	Date 3-13-86	Date 3-13-86	Sheet 96A

ODOT 3-17-86 TES

FHWA REGION	STATE	PROJECT	
5	OHIO	IX-ID99(9)	

965
170

CUYAHOGA COUNTY
HURON/PROSPECT BRIDGE

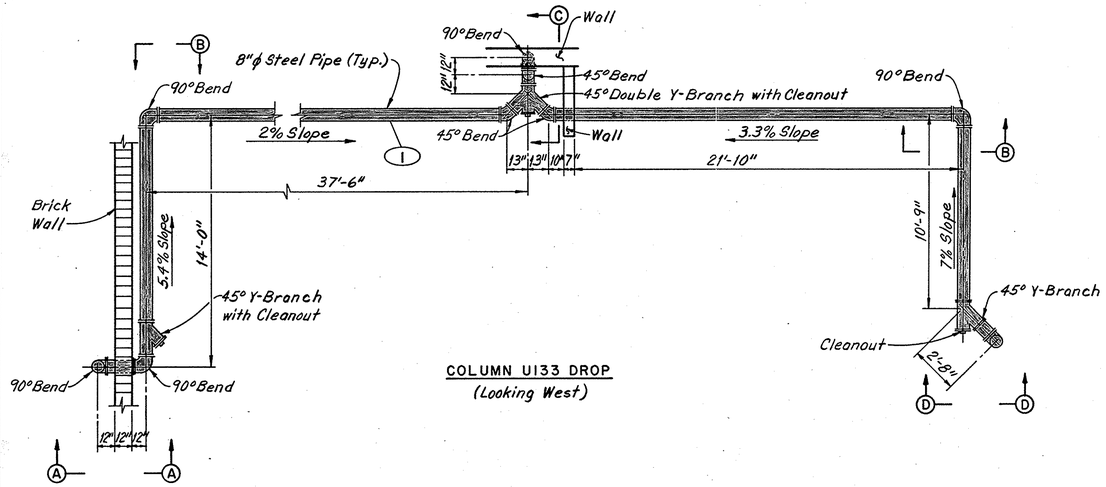

COLUMN U133 DROP
(Looking West)

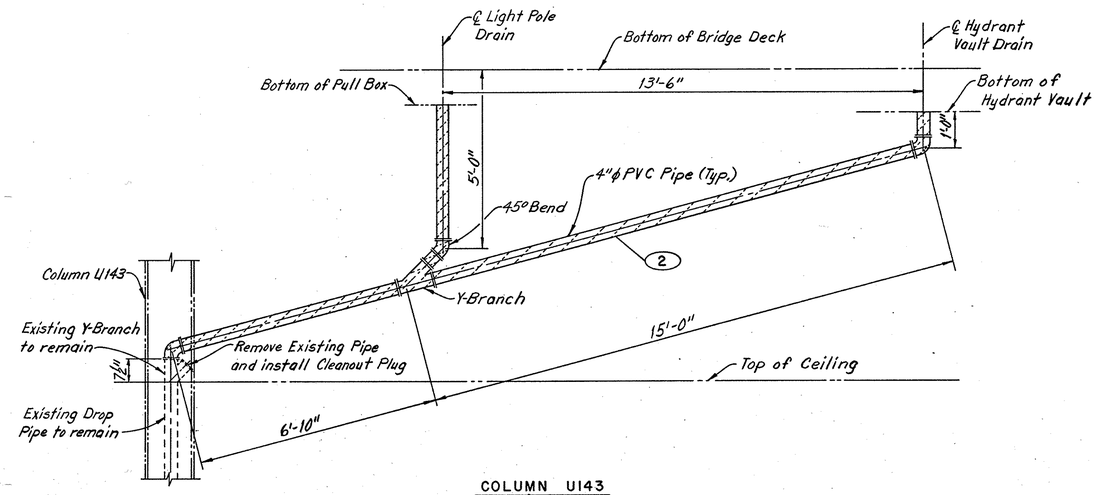

COLUMN U143
(Looking South)

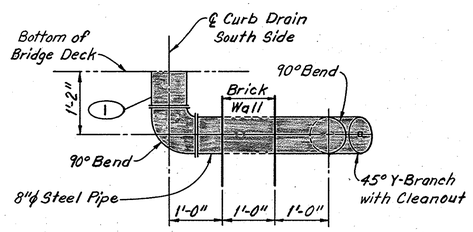

SECTION A-A
(Looking West)

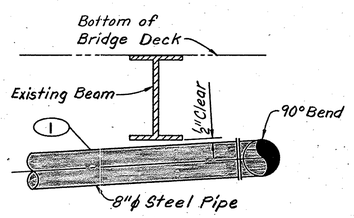

SECTION B-B

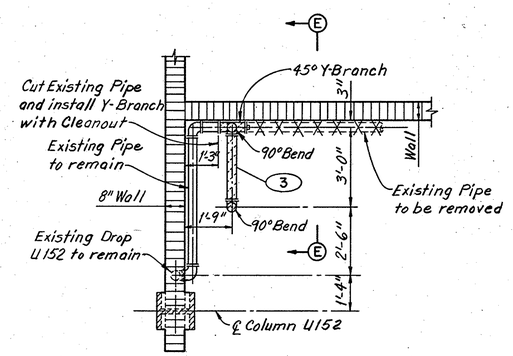

COLUMN U152
(Looking North)

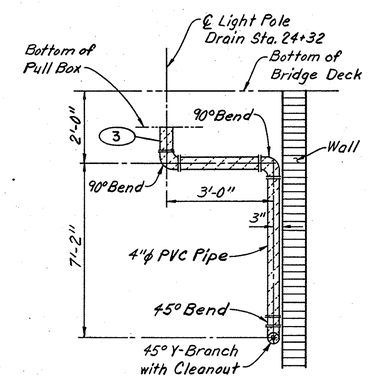

SECTION E-E
(Looking West)

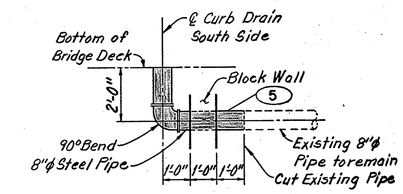

COLUMN U154 DROP
(Looking West)

LEGEND

- INDICATES PIPES TO BE REMOVED
- INDICATES P.V.C. PIPES
- INDICATES STEEL PIPE TO BE REPLACED
- INDICATES STEEL PIPE TO BE CLEANED & PAINTED

NOTES:
1) FOR LOCATION OF DROPS SEE PLAN ON SHEET 61B.
2) DIMENSIONS TO BE VERIFIED BY THE CONTRACTOR.

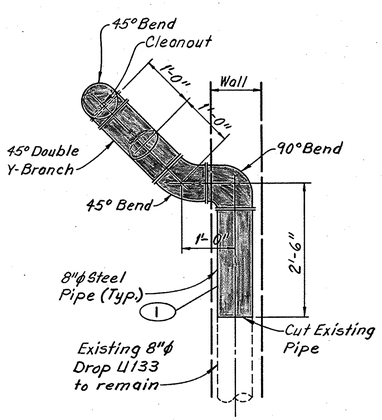

SECTION C-C
(Looking South)

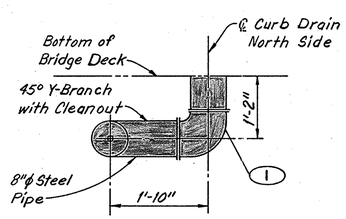

SECTION D-D
(Looking West)

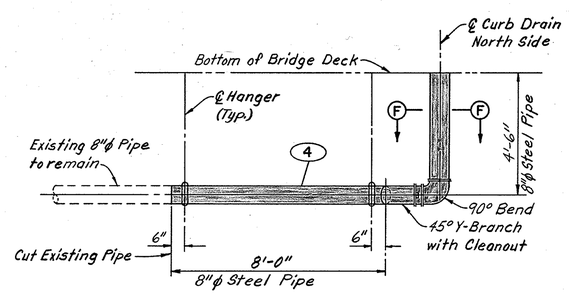

COLUMN U154 DROP
(Looking West)

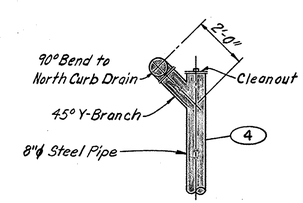

SECTION F-F
(Looking Down)

Revised LJD 3-13-86

EUTHENICS INC.
CONSULTING ENGINEERS
CLEVELAND OHIO

REHABILITATION OF TOWER CITY BRIDGES
PROSPECT AVE., HURON ROAD,
WEST 2ND., 3RD. & 6TH. ST. VIADUCTS
DRAINAGE DETAILS
UNITS 25 TO 28 & W. 2nd. ST.
PHASE V
HURON RD.

CLEVELAND CUYAHOGA COUNTY OHIO

Mode JSC	Trcd. JSC	Ckd. LJD	Rev. RAB	Scale:
Date 2-20-86	Date 3-10-86	Date 3-13-86	Date 3-13-86	Sheet 96S

Supersedes sheet 96, 3-26-86

ODOT 3-17-86 TES

FHWA REGION	STATE	PROJECT	
5	OHIO	M-ID 99 (9)	

97/170

CUYAHOGA COUNTY
HURON / PROSPECT BRIDGE

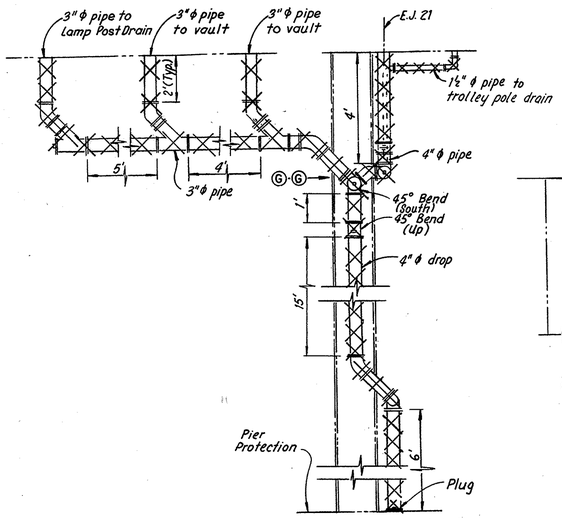

COLUMN U 173
(Looking North)

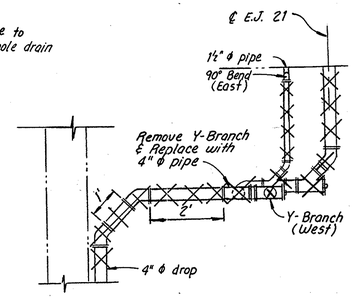

VIEW G-G
(Looking East)

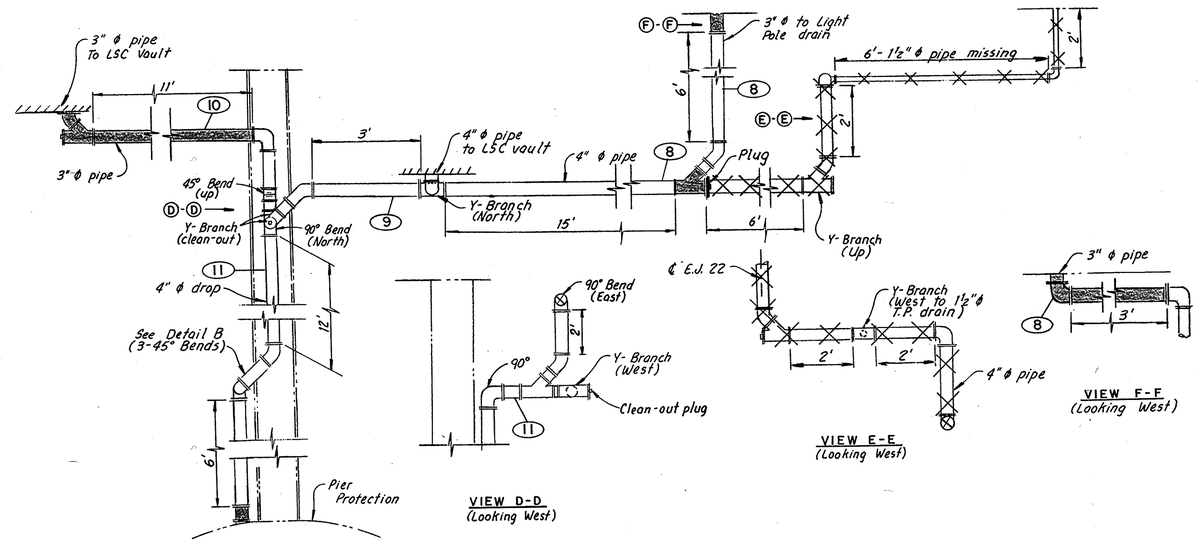

VIEW D-D
(Looking West)

VIEW E-E
(Looking West)

VIEW F-F
(Looking West)

REF 8 TO 11 - SHEET 61
COLUMN U 188
(Looking South)

NOTES:
1. For Estimated Quantities, see Sheets 61 & 62.
2. For Miscellaneous Drainage Details see Sheet 98.

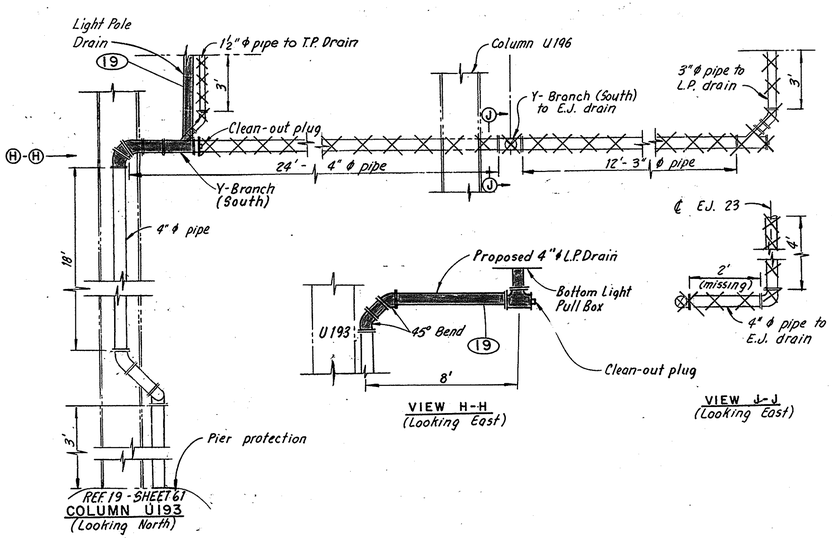

VIEW H-H
(Looking East)

VIEW J-J
(Looking East)

REF 19 - SHEET 61
COLUMN U193
(Looking North)

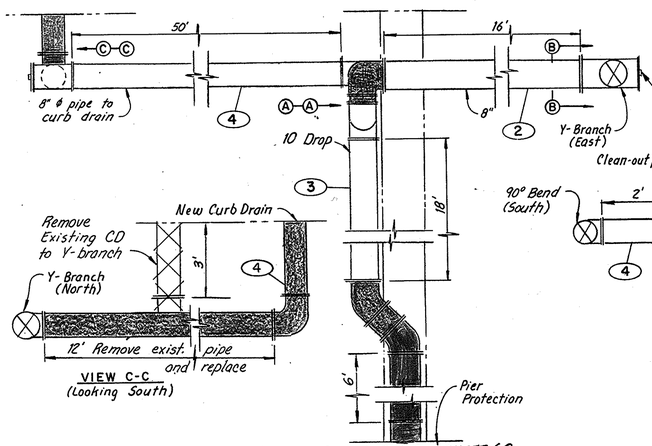

VIEW C-C
(Looking South)

REF. 2, 3, & 4 - SHEET 62
COLUMN U199
(Looking West)

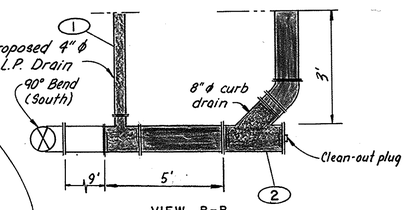

VIEW B-B
(Looking North)

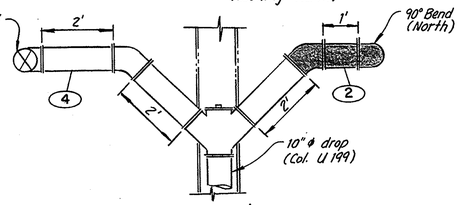

VIEW A-A
(Looking North)

LEGEND

- Remove pipe
- Clean and paint pipe
- Replace pipe
- (0) Drainage Reference No.

EUTHENICS INC.
CONSULTING ENGINEERS
CLEVELAND OHIO

REHABILITATION OF TOWER CITY BRIDGES
PROSPECT AVE., HURON ROAD,
WEST 2ND., 3RD. & 6TH. ST. VIADUCTS

DRAINAGE DETAILS
UNIT 28 TO UNIT 31

HURON ROAD
CLEVELAND CUYAHOGA COUNTY OHIO

Mode REM	Trcd. REM	Ckd. LJD	Rev. RAB	Scale: ½"=1'-0"
Date 3-22-78	Date 3-23-78	Date 2-3-82	Date 10-26-82	Sheet 97/170

FHWA REGION	STATE	PROJECT	
5	OHIO	IX-ID99(9)	

97A
170

CUYAHOGA COUNTY
HURON/PROSPECT BRIDGE

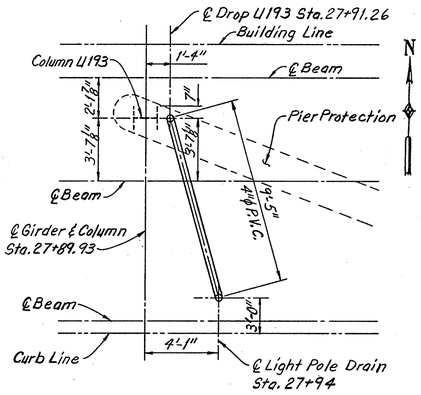

PLAN
(Column U193 Drop)

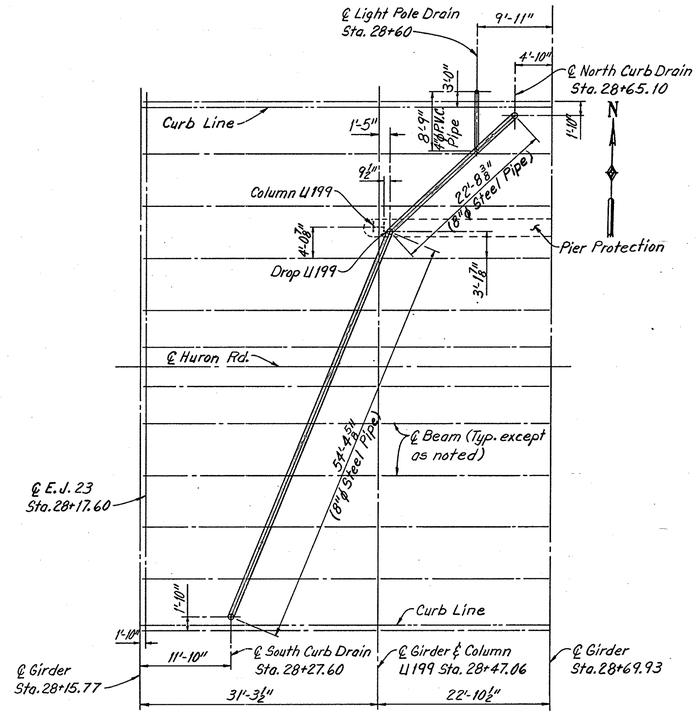

PLAN
(Column U199 Drop)

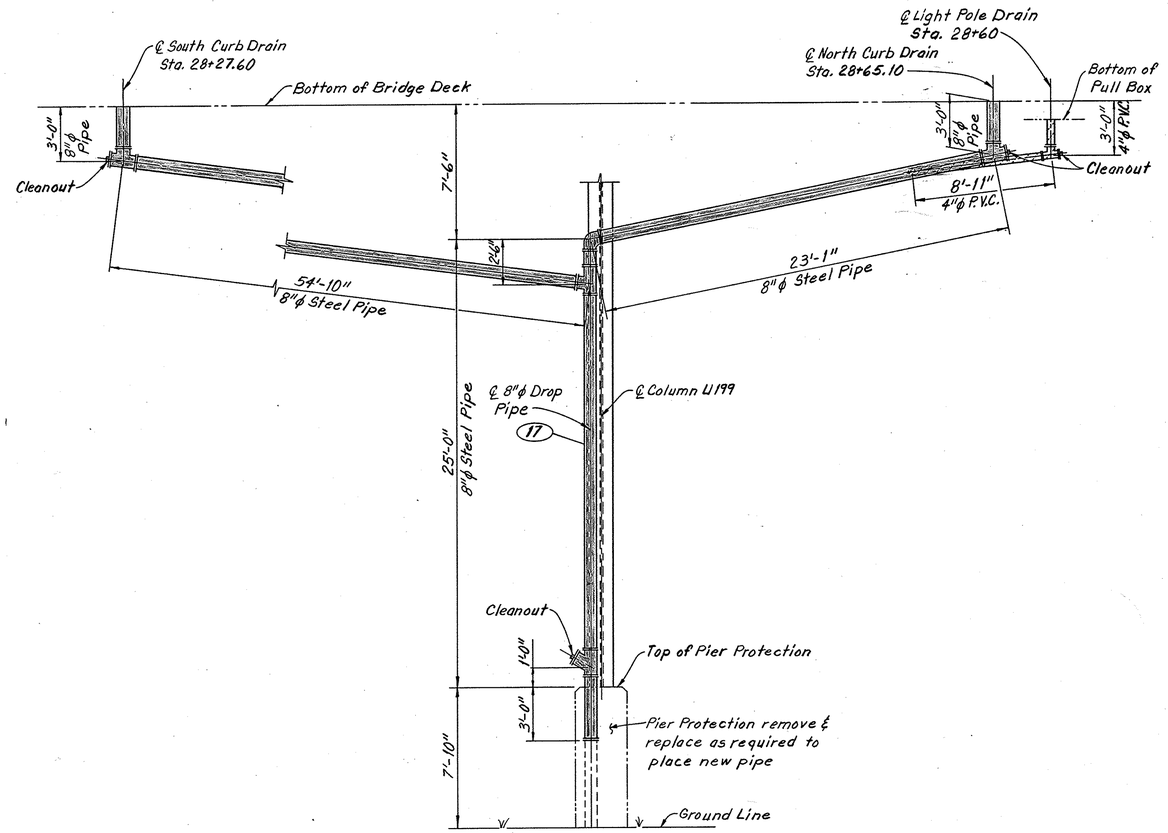

COLUMN U199
(Looking West)

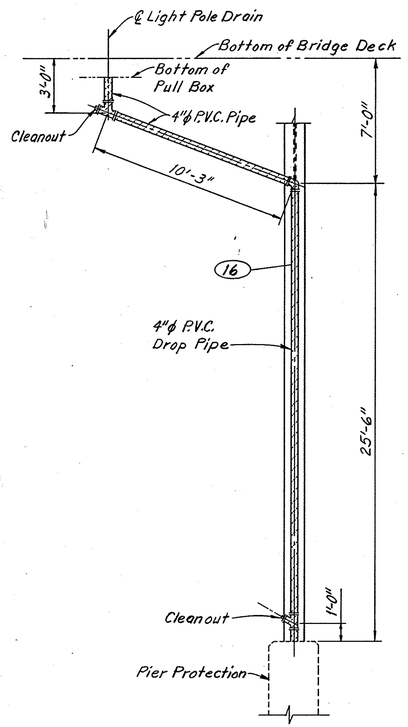

COLUMN U193
(Looking West)

LEGEND

- INDICATES PIPES TO BE REMOVED
- INDICATES P.V.C. PIPES
- INDICATES STEEL PIPE TO BE REPLACED
- INDICATES STEEL PIPE TO BE CLEANED & PAINTED

NOTES:
1) FOR LOCATION OF DROPS SEE PLAN ON SHEET 62B.
2) DIMINSIONS TO BE VERIFIED BY THE CONTRACTOR.

Sheet added 1-3-86

EUTHENICS INC.
CONSULTING ENGINEERS
CLEVELAND OHIO

REHABILITATION OF TOWER CITY BRIDGES
PROSPECT AVE., HURON ROAD,
WEST 2ND., 3RD. & 6TH. ST. VIADUCTS

DRAINAGE DETAILS
UNITS 28 TO 31
PHASE VI
HURON RD.
CLEVELAND CUYAHOGA COUNTY OHIO

Made JSC	Trcd. JSC	Ckd. LJD	Rev. RAB	Scale:
Date 12-11-85	Date 12-11-85	Date 12-13-85	Date 12-13-85	Sheet 97A

ODOT 12-24-85 TES

FHWA REGION	STATE	PROJECT	
5	OHIO	IX-ID99(9)	

975
120

CUYAHOGA COUNTY
HURON/PROSPECT BRIDGE

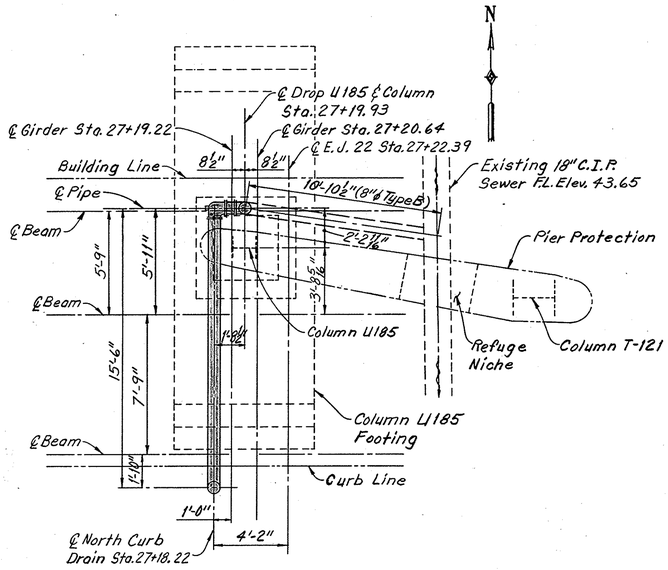

PLAN
(Column U185 Drop)

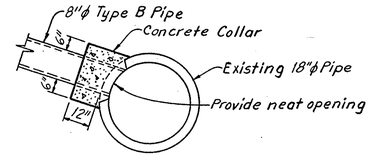

TYPICAL DETAIL FOR CONCRETE COLLAR

NOTE:
BACKFILL AROUND COLLAR AFTER CONCRETE HAS ATTAINED SUFFICIENT STRENGTH. COST OF CONCRETE COLLAR IS INCLUDED IN THE CONTRACT UNIT PRICE BID PER LIN. FT. 8" Ø TYPE B PIPE.

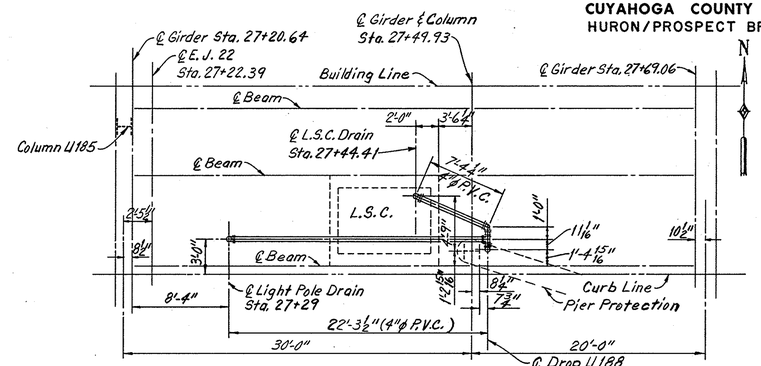

PLAN
(Column U188 Drop)

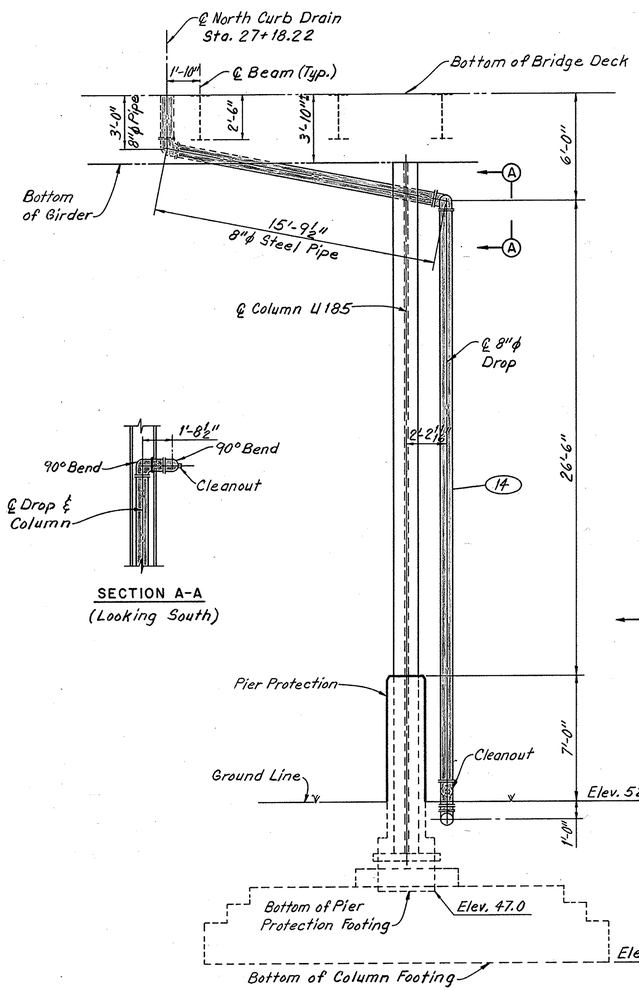

COLUMN U185
(Looking West)

SECTION A-A
(Looking South)

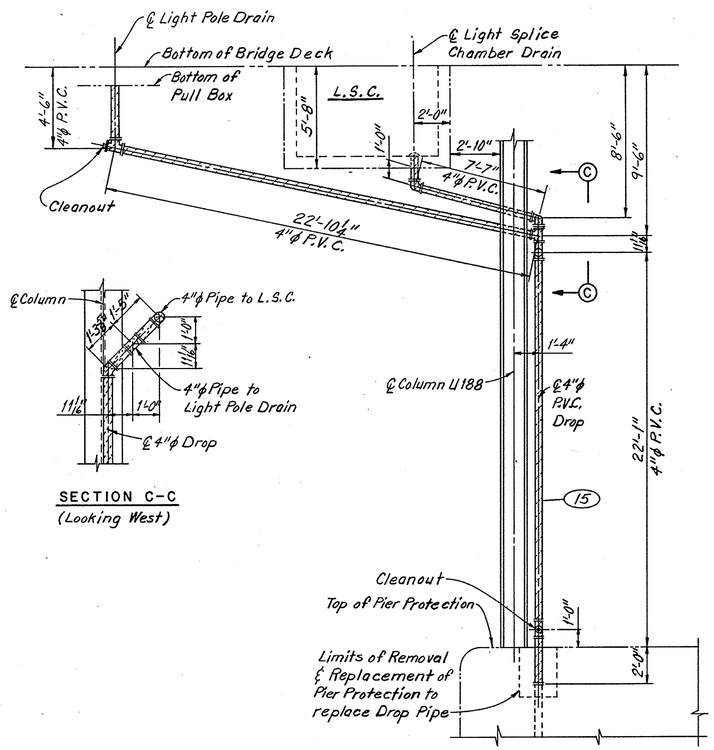

COLUMN U188
(Looking North)

SECTION C-C
(Looking West)

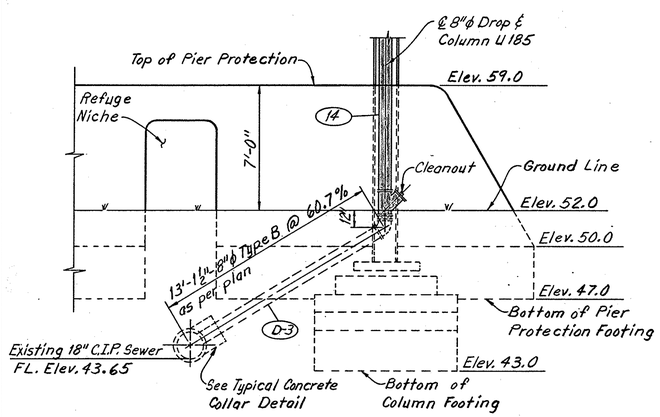

SECTION B-B
(Looking South)

NOTES:
1) FOR LOCATION OF DROPS SEE PLAN ON SHEET 62B.
2) DIMENSIONS TO BE VERIFIED BY THE CONTRACTOR.

LEGEND

- INDICATES PIPES TO BE REMOVED
- INDICATES P.V.C. PIPES
- INDICATES STEEL PIPE TO BE REPLACED
- INDICATES STEEL PIPE TO BE CLEANED & PAINTED

Sheet added 1-3-86

EUTHENICS INC.
CONSULTING ENGINEERS
CLEVELAND OHIO

REHABILITATION OF TOWER CITY BRIDGES
PROSPECT AVE., HURON ROAD,
WEST 2ND., 3RD. & 6TH. ST. VIADUCTS

DRAINAGE DETAILS
UNITS 28 TO 31
PHASE VI
HURON RD.

CLEVELAND CUYAHOGA COUNTY OHIO

Made JSC	Trcd. JSC	Ckd. LJD	Rev. RAB	Scale:
Date 12-1-85	Date 12-11-85	Date 12-13-85	Date 12-13-85	Sheet 97S

ODOT 12-24-85 TES

FHWA REGION	STATE	PROJECT	
5	OHIO	M-ID 99 (9)	

98 / 170

CUYAHOGA COUNTY
HURON / PROSPECT BRIDGE

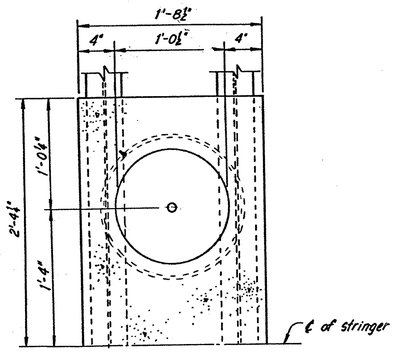

SECTION A-A

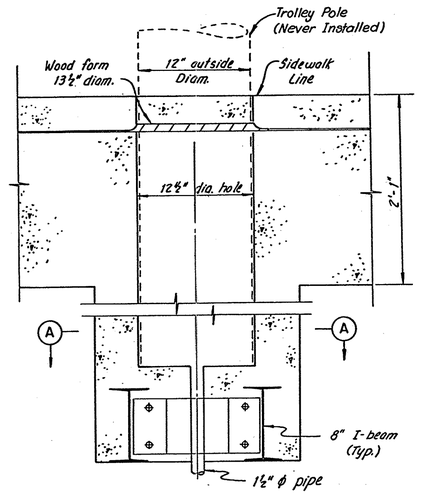

SECTION THRU DECK

EXISTING
TROLLEY POLE DRAIN
Scale: 1½" = 1'-0"

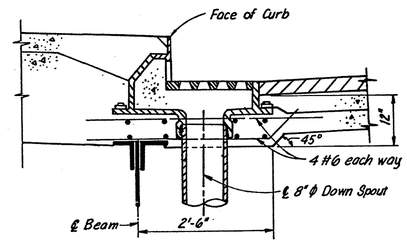

SECTION B-B

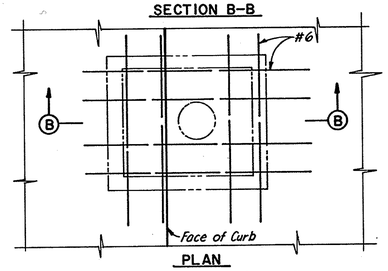

PLAN
CURB DRAIN REPLACEMENT
(REUSE EXISTING CURB DRAIN)

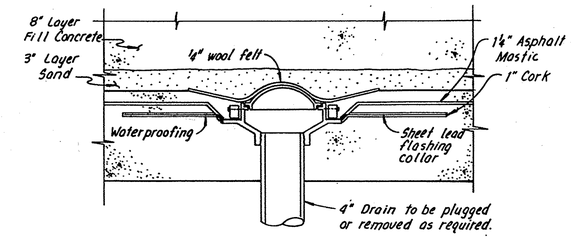

EXISTING
TROLLEY TROUGH DRAIN
Scale: 1½" = 1'-0"

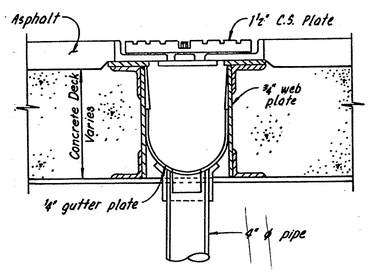

EXISTING
EXPANSION JOINT DRAIN
(TO BE REMOVED)
Scale: 1½" = 1'-0"

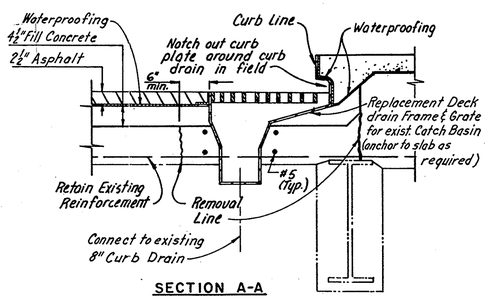

SECTION A-A

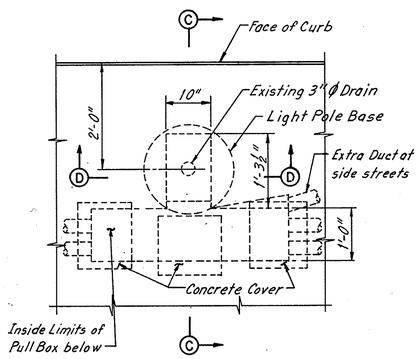

PLAN-EXISTING LIGHT POLE,
PULL BOX & DRAIN
Scale: ¾" = 1'-0"

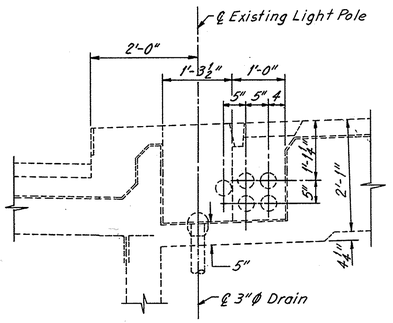

SECTION C-C
Scale: ¾" = 1'-0"

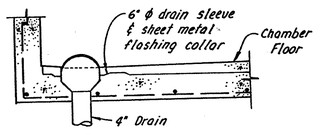

EXISTING
SPLICING CHAMBER DRAIN
Scale: ⅜" = 1'-0"

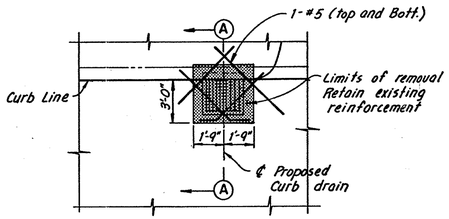

PLAN-TYPICAL PROPOSED INLET

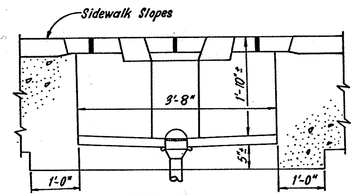

SECTION D-D
EXISTING LAMP POST DRAIN
Scale: ¾" = 1"
Note: Copper pan secured to floor drain with flashing ring.

EUTHENICS INC.
CONSULTING ENGINEERS
CLEVELAND OHIO

REHABILITATION OF TOWER CITY BRIDGES
PORTIONS OF PROSPECT AVE., HURON RD., WEST 2nd. & 3rd. ST. VIADUCTS

MISCELLANEOUS
DRAINAGE DETAILS

CLEVELAND CUYAHOGA COUNTY OHIO

Made REM	Trcd. J.S.C.	Ckd. LJD	Rev. RAB	Scale: As Shown
Date 3-25-78	Date 3-27-78	Date 3-3-82	Date 10-26-82	Sheet 98 / 170

FHWA REGION	STATE	PROJECT	
5	OHIO	M-ID 99 (9)	

99 / 170

CUYAHOGA COUNTY
HURON / PROSPECT BRIDGE

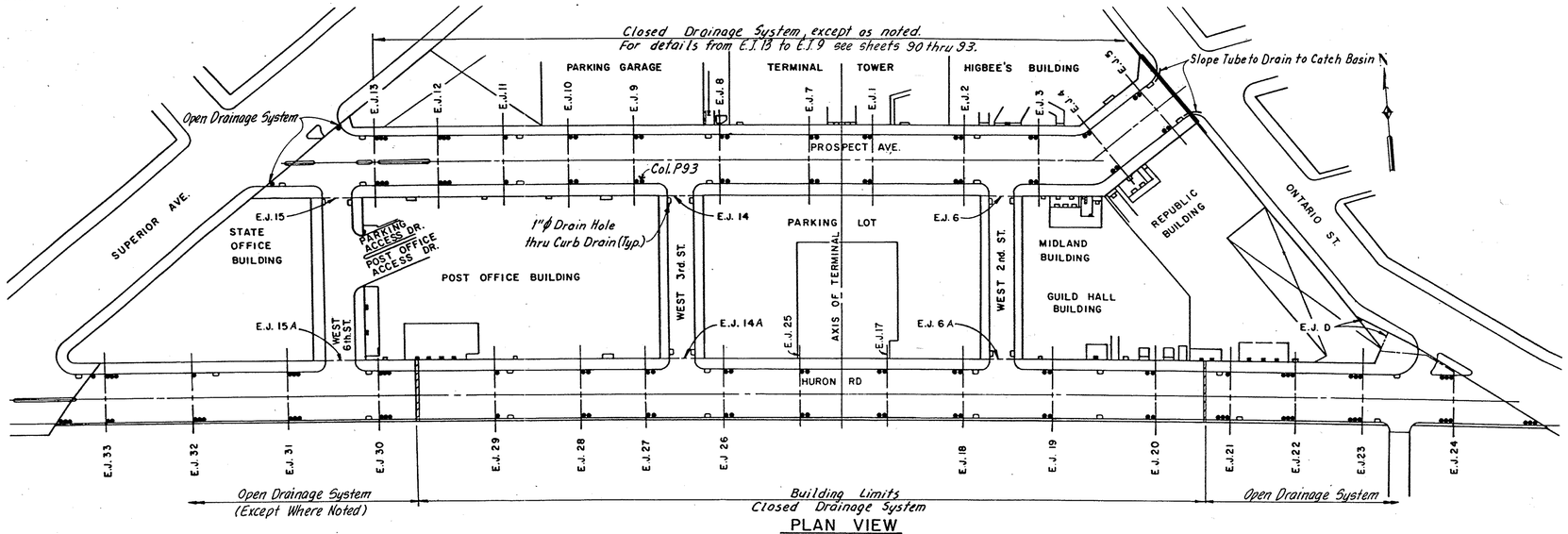

PLAN VIEW

LEGEND

• INDICATES LOCATION OF 1¼" Ø PVC DRAIN PIPES.

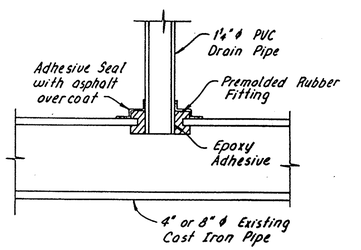

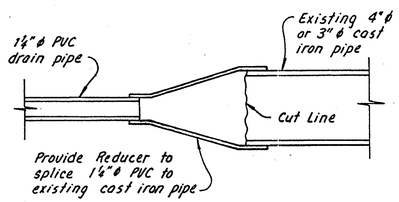

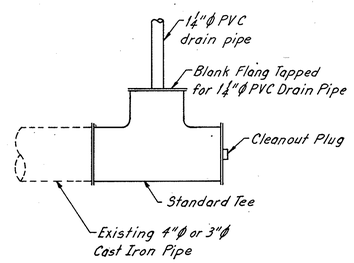

CLOSED DRAINAGE SYSTEM
TYPICAL CONNECTION DETAILS

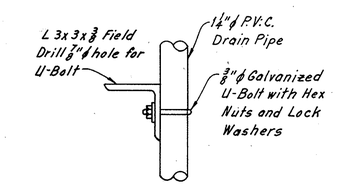

VIEW C-C
No Scale

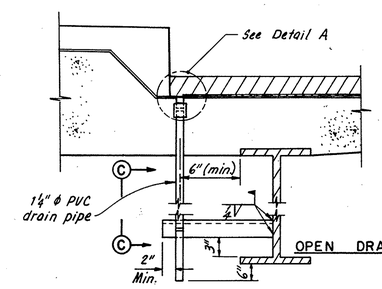

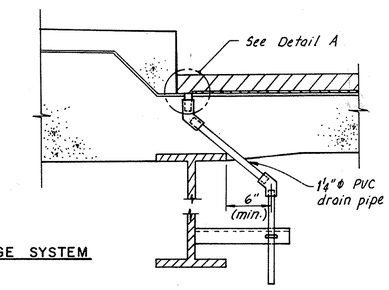

OPEN DRAINAGE SYSTEM

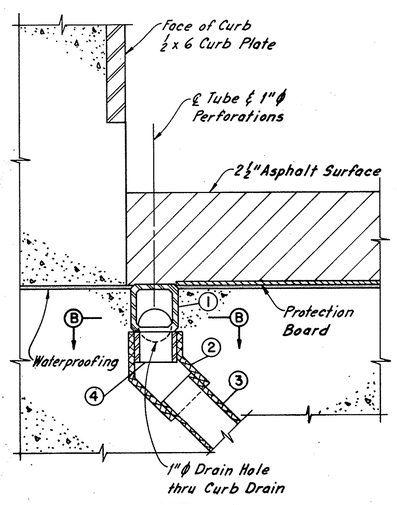

DETAIL A

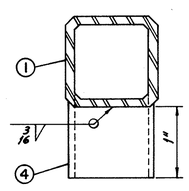

SECTION A-A

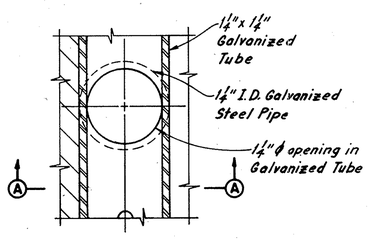

SECTION B-B

① 1 1/4" x 1 1/4" GALVANIZED, PERFORATED, STRUCTURAL TUBE WITH 11/32"± Ø HOLES 1" ON CENTERS ON TOP SIDE ONLY. CUT 1 1/4" Ø OPENING IN BOTTOM, CENTERED OVER EACH PVC DRAIN PIPE. THE STEEL FOR THE STRUCTURAL TUBE SHALL CONFORM TO THE FOLLOWING.
PREGALVANIZED, ASTM A 446, GRADE A STEEL, GALVANIZED AS PER ASTM A 525.
POSTGALVANIZED, ASTM A 569 OR A 366, GALVANIZED AS PER 711.02.
THE MINIMUM STEEL THICKNESS SHALL BE 0.105"
ANY DAMAGE GALVANIZING SHALL BE REPAIRED AS PER AASHO M 36.
INSTALL TUBES WITH 1/8" EXPANSION OPENING BETWEEN PIECES.

② 1 1/4" PVC SLEEVE OR 45° ELBOW. POSITION ACCURATELY TO MATCH 1 1/4" I.D. OUTLET PIPES IN PERFORATED TUBE. PLACE MEMBRANE CAREFULLY AT THE PIPE OPENINGS, MAKING SURE TO COMPLETELY SEAL AROUND THE LIP OF THE PIPE BUT TAKING CARE NOT TO PLUG OR CONSTRUCT THE OPENING. THE SLEEVE AND ELBOW SHALL COMPLY WITH ASTM D 2661 OR ASTM D 2665.
THE ELBOW SHALL BE USED ONLY AS REQUIRED WHEN STRUCTURAL STEEL IS BELOW CURB LINE. WHERE THE ELBOW IS NOT ADEQUATE TO PROVIDE CLEARANCE BETWEEN THE PVC PIPE AND THE STRUCTURAL STEEL, THE ELBOW SHALL BE CANTED AS REQUIRED TO PROVIDE CLEARANCE.
THE SOLVENT CEMENT FOR THE PIPE AND FITTINGS SHALL CONFORM TO ASTM D 2235 OR ASTM D 2564.

③ 1 1/4" I.D. PVC DRAIN PIPE SHALL BE POSITIONED AS REQUIRED TO CLEAR THE STRUCTURAL STEEL THEN CEMENTED TO THE SLEEVE OR ELBOW.

④ 1 1/4" I.D. STEEL OUTLET PIPE WELDED TO THE STRUCTURAL TUBE AND GALVANIZED AS SPECIFIED IN ① ABOVE.

NOTES:

THE SUBDRAINAGE SYSTEM SHALL CONSIST OF PVC PIPES AND FITTINGS AND STRUCTURAL TUBES AS SPECIFIED ON THIS SHEET.

THE PIPES SHALL BE SPACED AT APPROXIMATELY SIX FOOT INTERVALS WITH A PIPE PLACED AT THE TERMINATION OF THE ASPHALT CONCRETE IN THE VICINITY OF EXPANSION JOINTS, AS SHOWN ON THE PLANS.

THE STRUCTURAL TUBE MAY BE PLACED IN ANY CONVENIENT LENGTHS USING BUTT JOINTS.

DRAIN PIPES AT SOME LOCATIONS SHALL BE CONNECTED AS SHOWN ON SPECIAL DETAILS FOR CLOSED DRAINAGE SYSTEM. SERIES OF DOWNSPOUTS SHALL BE CONNECTED BY A LATERAL RUN WHICH IS SLOPED TO DRAIN. ALL SUBDRAINAGE SYSTEMS WITHIN BUILDING LIMITS SHALL TIE IN AT EXISTING DRAINAGE SYSTEMS BY ANY OF THE METHODS SHOWN OR ACCEPTABLE ALTERNATIVES AS APPROVED BY THE ENGINEER.

EUTHENICS INC.
CONSULTING ENGINEERS
CLEVELAND OHIO

REHABILITATION OF TOWER CITY BRIDGES
PORTIONS OF PROSPECT AVE., HURON RD., WEST 2nd. & 3rd. ST. VIADUCTS

SUBDRAINAGE FOR WEARING SURFACE COURSE – DETAILS

CLEVELAND CUYAHOGA COUNTY OHIO

Made LRH	Trcd. JSC	Ckd. LJD	Rev. RAB	Scale: No Scale
Date 6-10-81	Date 6-24-81	Date 2-16-82	Date 10-26-82	Sheet 99 /170

FHWA REGION	STATE	PROJECT	
5	OHIO	M-1D99(9)	

100/170

CUYAHOGA COUNTY
HURON/ PROSPECT BRIDGE

CONCRETE REPAIR QUANTITIES

CRASH WALL REPAIR COLUMN NO.	BID ITEMS 519 & 520 SQ. FT. REPAIR TYPE A	B	C	D
PROSPECT AVE.				
P158			10	
P158, P156	280		154	
P157			6	
P153			40	
P152, P149			3	
P151			20	
P150		12		
P148, P146		112		
P146, P142			49	
P144		92		
P143			10	
P142, P139			4	
P141, P137			36	
P138, P135			1	
P137, P134			6	
P135, P131			1	
P130, P127				
P129, P126			31	
P128, P125		54		
P126, P122			16	
P124			20	
P121, P118			7	
P117			40	
P115, P111				6
P113			40	
Totals	280	270	494	6

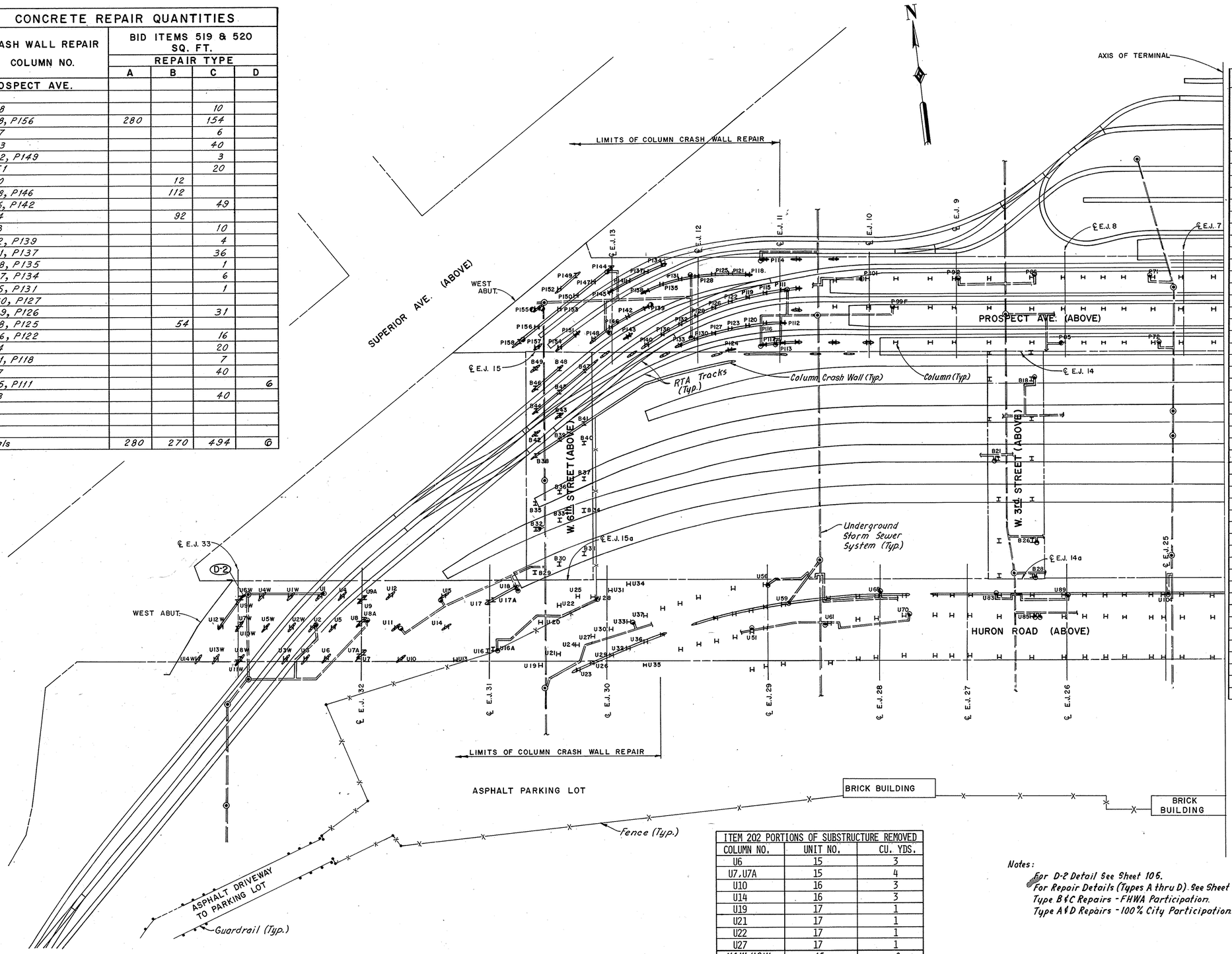

ITEM 202 PORTIONS OF SUBSTRUCTURE REMOVED		
COLUMN NO.	UNIT NO.	CU. YDS.
U6	15	3
U7, U7A	15	4
U10	16	3
U14	16	3
U19	17	1
U21	17	1
U22	17	1
U27	17	1
V6W, U9W	15	6
TOTALS		23

Notes:
For D-2 Detail See Sheet 105.
For Repair Details (Types A thru D). See Sheet 105.
Type B & C Repairs - FHWA Participation.
Type A & D Repairs - 100% City Participation.

CONCRETE REPAIR QUANTITIES

CRASH WALL REPAIR COLUMN NO.	BID ITEMS 519 & 520 SQ. FT. REPAIR TYPE A	B	C	D
HURON ROAD				
U14W		36	3	
U13W		36	35	
U12W, U9W, U6W		60		
U11W, U8W	See Detail, Sheet 105		147	
U10W, U7W		28	45	
U5W	4		5	
U4W			25	
U3W		1	19	
U2W	2			
U1W		16	5	
U1	2			1
U2			15	
U3	3	4	7	
U4	5			
U5	5			
U6 Remove Crash Wall				
U7, U7A Remove Crash Wall				
U8, U8A	60		70	
U9, U9A	6	77		
U10 Remove Crash Wall				
U11			5	
U12	8			
U14 Remove Crash Wall				
U15			15	
U17, U17A, U18			45	6
U23		6		
U26, U29				1
U29			45	
U32			6	
U36	9		1	
WEST 6th. STREET				
B38		5	12	2
B39, B41				1
B42			4	
B43		1	3	
B46, B48			7	
B49			4	1
Totals	104	270	523	12

LEGEND
- Storm Sewer Manhole
- Drop Along Column
- P134 U210 Column Designation

EUTHENICS INC.
CONSULTING ENGINEERS
CLEVELAND OHIO

REHABILITATION OF TOWER CITY BRIDGES
PROSPECT AVE., HURON ROAD,
WEST 2ND., 3RD. & 6TH. ST. VIADUCTS

TRACK LEVEL PLAN - WEST

CLEVELAND CUYAHOGA COUNTY OHIO

Made JSC	Trcd. JSC	Ckd. LJD	Rev. RAB	Scale: 1"=50'
Date 3-29-78	Date 4-16-78	Date 10-22-78	Date 10-26-82	Sheet 100/170

FHWA REGION	STATE	PROJECT	
5	OHIO	M-ID 99 (9)	

101/170

CUYAHOGA COUNTY
HURON / PROSPECT BRIDGE

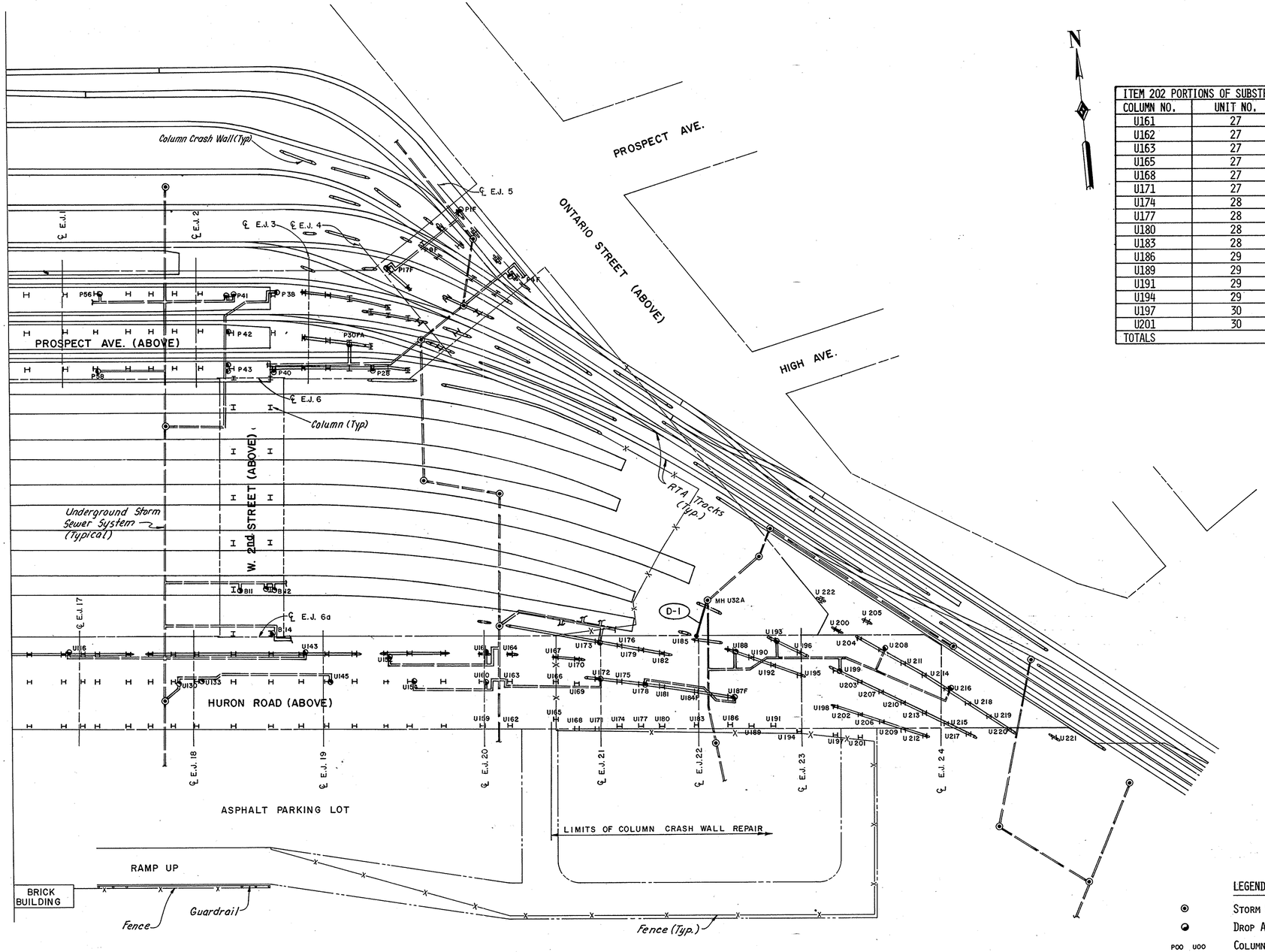

N

ITEM 202 PORTIONS OF SUBSTRUCTURE REMOVED		
COLUMN NO.	UNIT NO.	CU. YDS.
U161	27	1
U162	27	1
U163	27	1
U165	27	1
U168	27	1
U171	27	1
U174	28	1
U177	28	1
U180	28	1
U183	28	1
U186	29	1
U189	29	1
U191	29	1
U194	29	1
U197	30	1
U201	30	1
TOTALS		16

CONCRETE REPAIR QUANTITIES				
CRASH WALL REPAIR COLUMN NO.	BID ITEMS 519 & 520 SQ. FT. REPAIR TYPE			
	A	B	C	D
HURON ROAD				
U167, U170			3	
U172, U175		4	7	
U173		3	9	
U175, U178			4	
U176, U179			4	
U178, U181		46		
U179, U182			15	
U181, U184			4	
U181, U187		3	3	
U185	10	7	8	
U188, U190		14		
U190, U192		16		
U192, U195			8	
U193, U196		85		
U198, U202		148		
U199, U203		80		
U202, U206				12
U203, U207		18		
U204, U208			6	
U206, U209		35		
U207, U210		25		
U208, U211		12		7
U209, U212		6		
U210, U213			80	
U211, U214		2		
U213, U215			16	
U214, U216			3	
U215, U217			10	
U218, U219		6		
U219, U220			6	
U221			3	
U222			3	
Totals	10	510	192	19

Note:
Type B & C Repairs - FHWA Participation
Type A & D Repairs - 100% City Participation

LEGEND

- Storm Sewer Manhole
- Drop Along Column
- P00 U00 Column Designation
- New Drop Pipe Along Column
- New 8" Drainage Pipe

NOTES:

1. For Repair Details (Type A thru D) see Sheet 105.
2. For (D-1) Detail see Sheet 105.

EUTHENICS INC.
CONSULTING ENGINEERS
CLEVELAND OHIO

REHABILITATION OF TOWER CITY BRIDGES
PROSPECT AVE., HURON ROAD,
WEST 2ND., 3RD. & 6TH. ST. VIADUCTS

TRACK LEVEL PLAN - EAST

CLEVELAND CUYAHOGA COUNTY OHIO

Made JSC	Trcd. JSC	Ckd. LJD	Rev. RAB	Scale: 1"=50'
Date 3-30-78	Date 4-16-78	Date 10-25-82	Date 10-26-82	Sheet 101/170

FHWA REGION	STATE	PROJECT	
5	OHIO	M-ID 99 (9)	

102/170

CUYAHOGA COUNTY
HURON/ PROSPECT BRIDGE

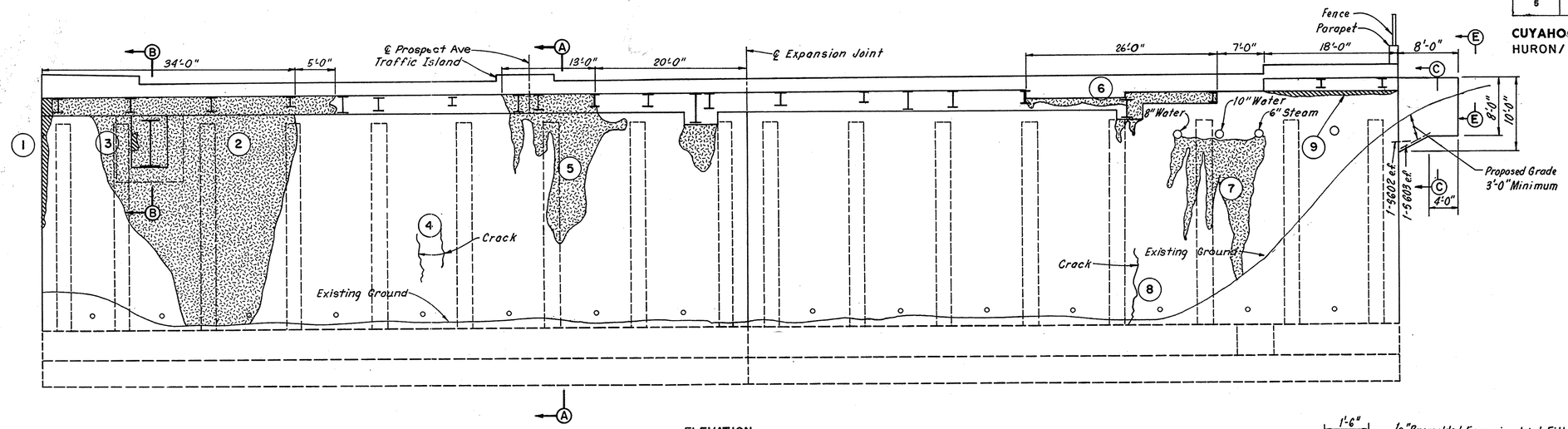

ELEVATION
(Looking West)
Scale: 1/8" = 1'-0"

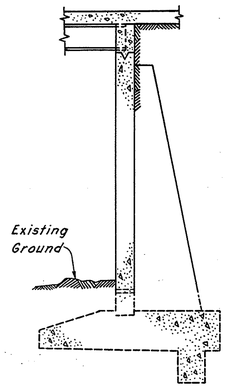

SECTION A-A
Scale: 1/8" = 1'-0"

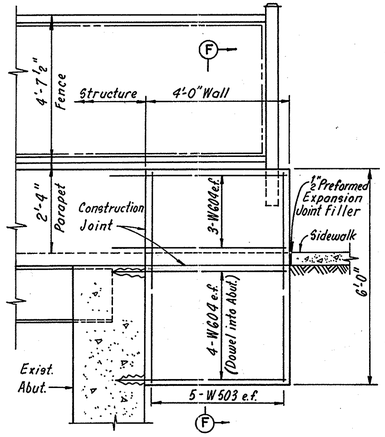

VIEW E-E

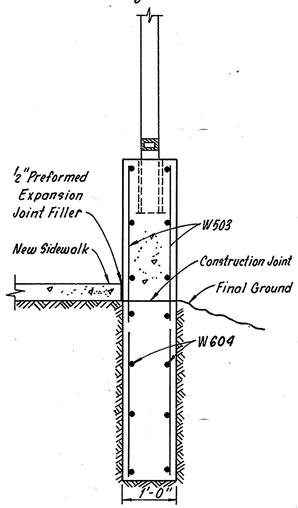

SECTION F-F

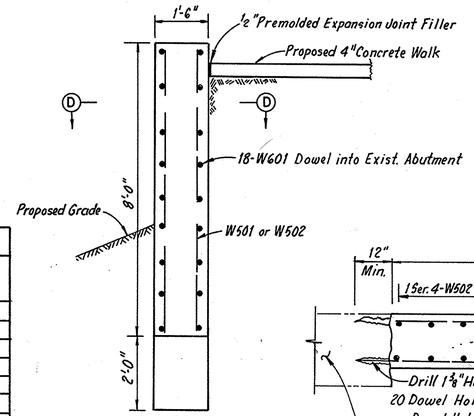

SECTION C-C
Scale 1/2" = 1'-0"

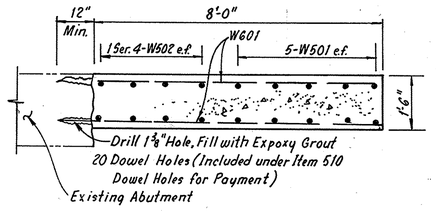

SECTION D-D
Scale 1/2" = 1'-0"

REINFORCMENT SCHEDULE

MARK	NO.	LENGTH	TYPE	SER. INCR.	WEIGHT (LBS)
W501	10	7'-8"	Str.		80
W502	2 Ser. 4	~~7'-8"~~ 9'-8"	Str.	8"	72
W503	10	5'-8"	Str.		59
W601	18	8'-10"	Str.		239
W602	2	3'-10"	Str.		12
W603	2	5'-6"	Str.		17
W604	14	5'-0"	Str.		105
TOTAL WEIGHT					584

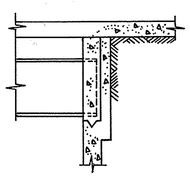

SECTION B-B

LEGEND

Concrete Spall (Surface Treatment)	TYPE A
Concrete Spall With Exposed Reinforcement	TYPE B
Concrete Spall or Honey Comb	TYPE C
Crack in Concrete	TYPE D
Reference Number Location	(0)

CONCRETE REPAIR QUANTITIES

REF. NO.	BID ITEM 519 or 520 REPAIR TYPE SQ. FT. A	B	C	D
1			20	
2	621			
3			2	
4				6
5	158			
6	25			
7	76			
8				5
9			20	
TOTAL	880	—	42	11

ABUTMENT WINGWALL

ITEM 503	ITEM 509	ITEM 510	ITEM 511
UNCLASSIFIED EXCAVATION	REINF. STEEL GRADE 60	DOWEL HOLES	CLASS C CONCRETE SUBSTRUCTURE
CU. YDS.	POUND	EACH	CU. YDS.
6	584	34	5

Note: Quantities carried over to Summary Sheets 17B & 17C.

Notes:
For Typical Concrete Repair Details See Sheet 105.
Type B & C Repairs - FHWA Participation.
Type A & D Repairs - 100% City Participation.

EUTHENICS INC.
CONSULTING ENGINEERS
CLEVELAND OHIO

REHABILITATION OF TOWER CITY BRIDGES
PROSPECT AVE., HURON ROAD,
WEST 2ND., 3RD. & 6TH. ST. VIADUCTS

WEST ABUTMENT
CONCRETE REPAIR
PROSPECT AVE.

CLEVELAND CUYAHOGA COUNTY OHIO

Mode: LJD	Trcd. JSC	Ckd. LJD	Rev. RAB	Scale: As Noted
Date: 4-28-78	Date: 4-30-82	Date: 10-25-82	Date: 10-26-82	Sheet 102/170

FHWA REGION	STATE	PROJECT	
5	OHIO	M-ID 99 (9)	

103/170

CUYAHOGA COUNTY
HURON / PROSPECT BRIDGE

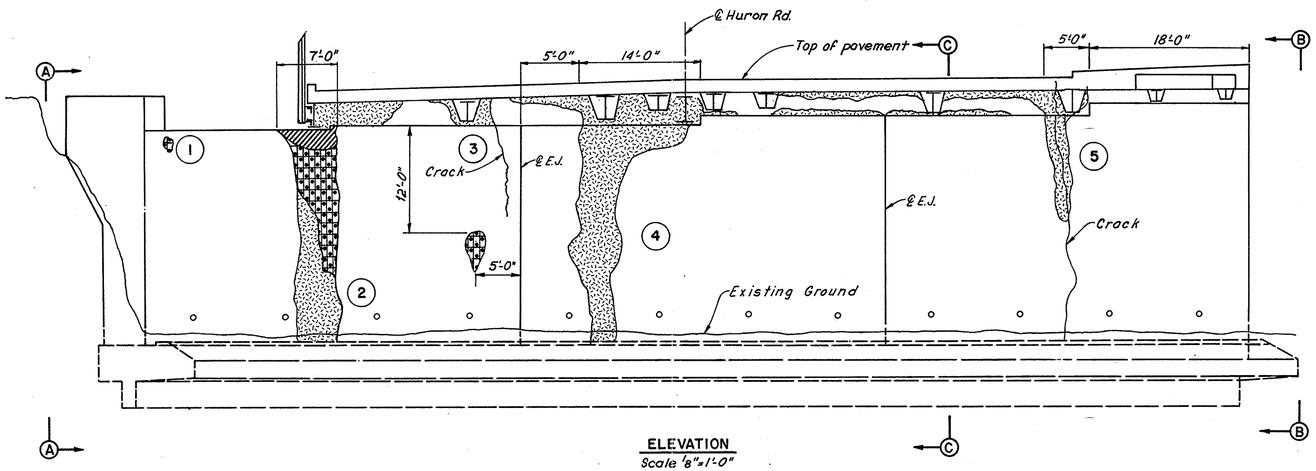

ELEVATION
Scale: 1/8" = 1'-0"

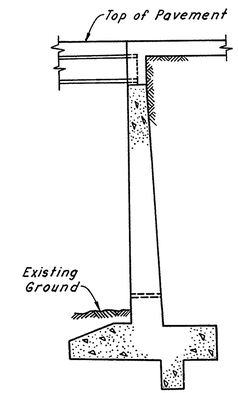

SECTION C-C
Scale: 1/8" = 1'-0"

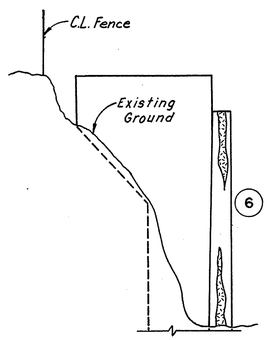

VIEW A-A
SOUTH WINGWALL
No Scale

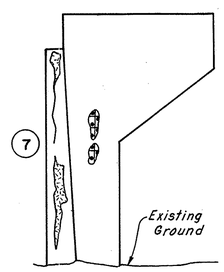

VIEW B-B
NORTH WINGWALL
No Scale

CONCRETE REPAIR QUANTITIES				
REF. NO.	BID ITEM 519 or 520			
	REPAIR TYPE			
	SQ. FT.			
	A	B	C	D
1		2		
2	78	60	30	
3	10	10		6
4	200			
5	96			15
6	20			
7	18	3		
TOTAL	422	75	30	21

Notes:
For Typical Concrete Repair Details See Sheet 105.
Type B & C - FHWA Participation.
Type A & D - 100% City Participation.

LEGEND

Concrete Spall (Surface Treatment)	TYPE A
Concrete Spall With Exposed Reinforcement	TYPE B
Concrete Spall or Honey Comb	TYPE C
Crack in Concrete	TYPE D
Reference Number Location	(0)

EUTHENICS INC.
CONSULTING ENGINEERS
CLEVELAND OHIO

REHABILITATION OF TOWER CITY BRIDGES
PROSPECT AVE., HURON ROAD,
WEST 2ND., 3RD. & 6TH. ST. VIADUCTS

WEST ABUTMENT
CONCRETE REPAIR
HURON ROAD

CLEVELAND CUYAHOGA COUNTY OHIO

Made LJO	Trcd. JSC	Ckd. LPH	Rev. RAB	Scale: As Noted
Date 4-28-78	Date 5-14-78	Date 10-25-78	Date 10-26-82	Sheet 103/170

FHWA REGION	STATE	PROJECT	
5	OHIO	M-ID 99 (9)	

104/170

CUYAHOGA COUNTY
HURON / PROSPECT BRIDGE

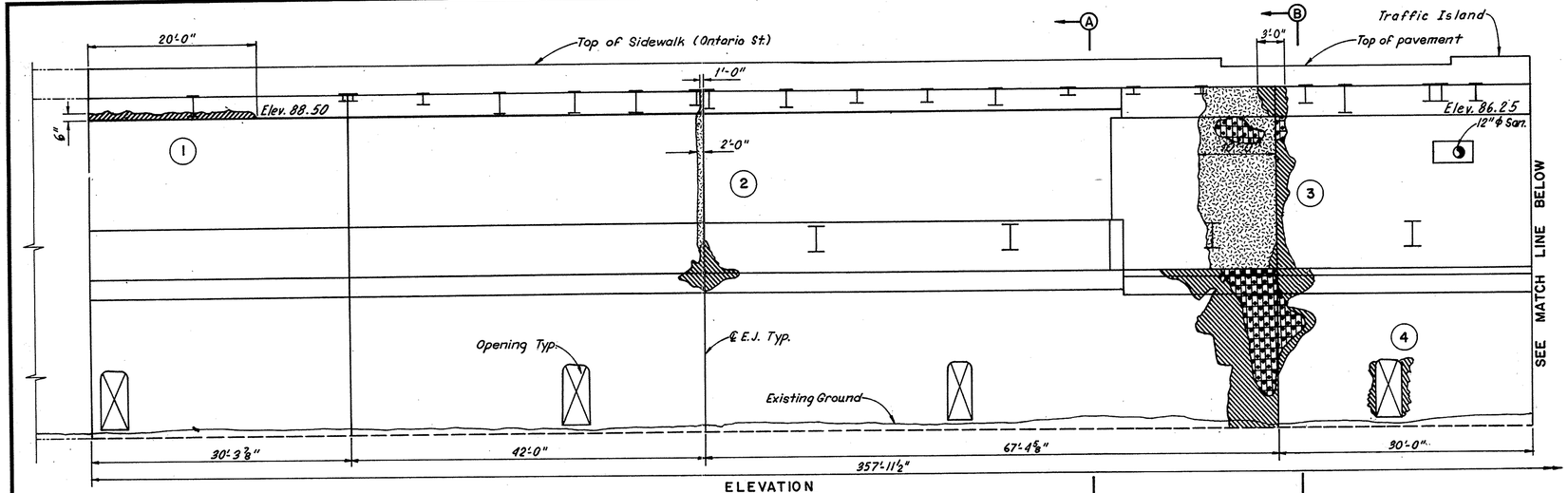

ELEVATION
(Footing Not Shown)
Scale: ⅛" = 1'-0"

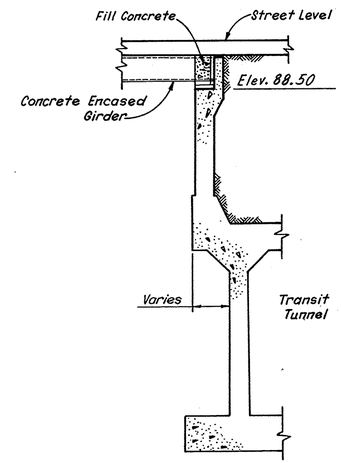

SECTION A-A
Scale: ⅛" = 1'-0"

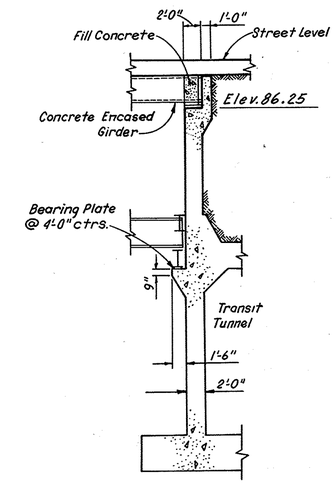

SECTION B-B
Scale: ⅛" = 1'-0"

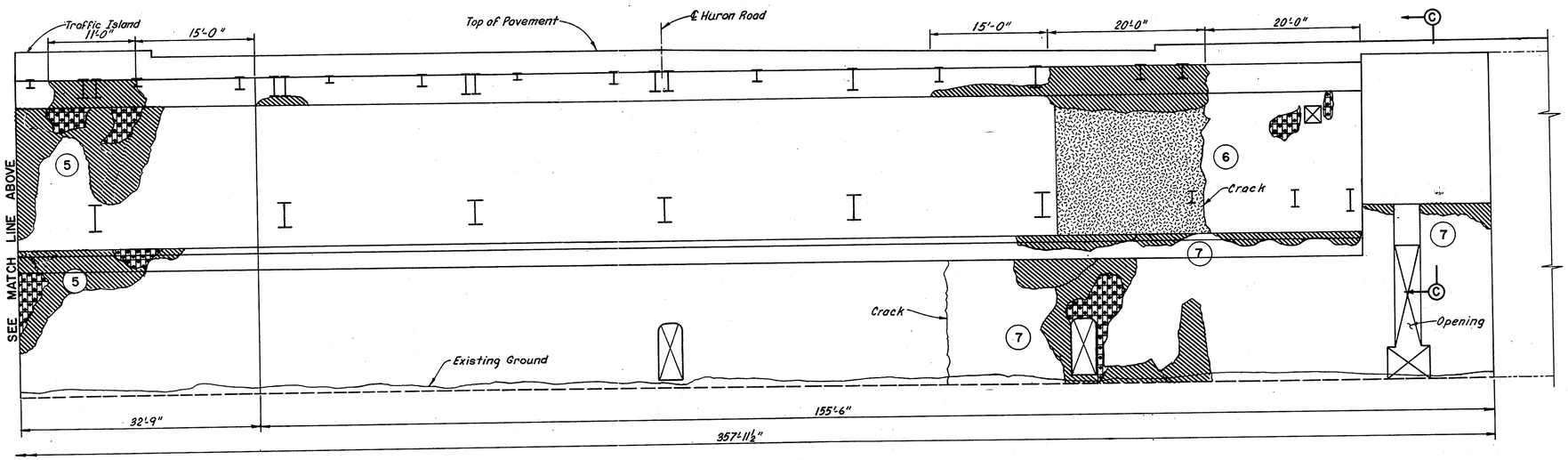

ELEVATION
(Footing Not Shown)
Scale: ⅛" = 1'-0"

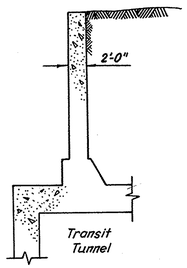

SECTION C-C
Scale: ⅛" = 1'-0"

LEGEND

Concrete Spall (Surface Treatment)	TYPE A
Concrete Spall With Exposed Reinforcement	TYPE B
Concrete Spall or Honey Comb	TYPE C
Crack in Concrete	TYPE D
Reference Number Location	(0)

CONCRETE REPAIR QUANTITIES

REF. NO.	BID ITEM 519 or 520 REPAIR TYPE SQ. FT.			
	A	B	C	D
1			15	
2	30		40	
3	200	120	150	
4			15	
5		60	180	
6	295	20	150	8
7		50	210	8
TOTAL	525	250	760	16

Notes:
For Typical Concrete Repair Details See Sheet 105.
Type B & C Repairs - FHWA Participation.
Type A & D Repairs - 100% City Participation.

EUTHENICS INC.
CONSULTING ENGINEERS
CLEVELAND OHIO

REHABILITATION OF TOWER CITY BRIDGES
PROSPECT AVE., HURON ROAD,
WEST 2ND., 3RD. & 6TH. ST. VIADUCTS

EAST ABUTMENT
CONCRETE REPAIR
HURON ROAD

CLEVELAND CUYAHOGA COUNTY OHIO

Made LJD	Trcd. JSC	Ckd. LRH	Rev. RAB	Scale: As Noted
Date 4-23-76	Date 5-14-82	Date 10-25-82	Date 10-26-82	Sheet 104/170

FHWA REGION	STATE	PROJECT	
5	OHIO	M-ID 99 (9)	

105/170

CUYAHOGA COUNTY
HURON / PROSPECT BRIDGE

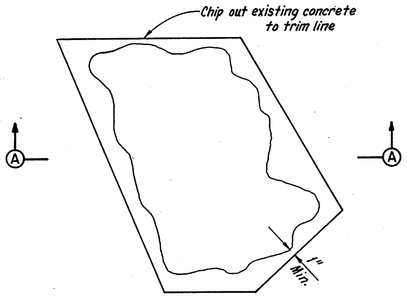

TYPE A
Concrete Spall

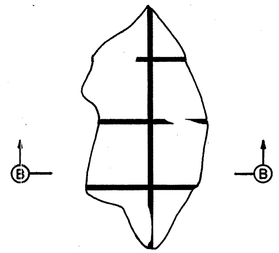

TYPE B
Concrete Spall with exposed reinforcing

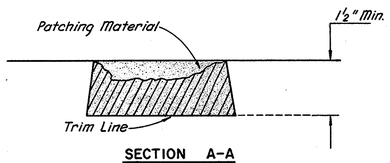

SECTION A-A

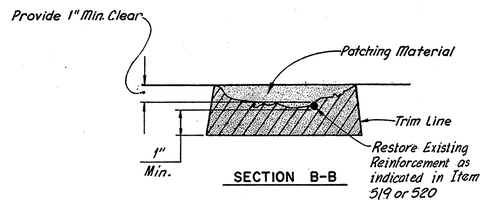

SECTION B-B

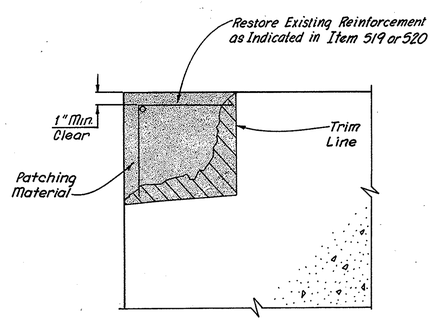

TYPE C
Concrete spall or honeycomb

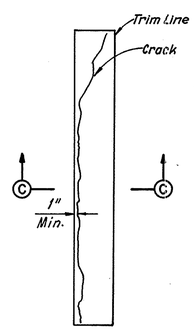

TYPE D
Crack in Concrete

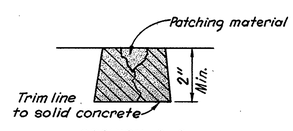

SECTION C-C

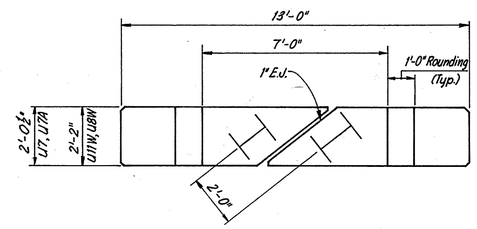

VIEW A-A

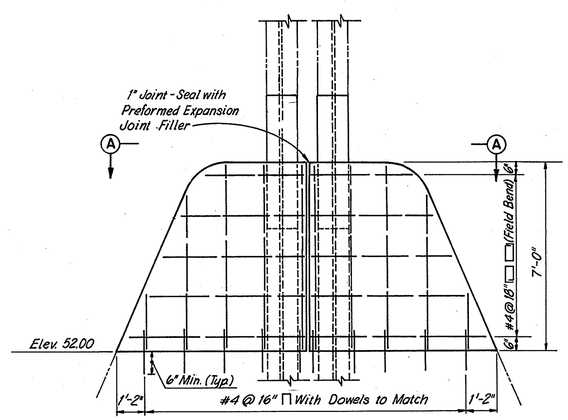

ELEVATION—COLUMNS U8W & U11W
Scale: ⅜" = 1'-0"

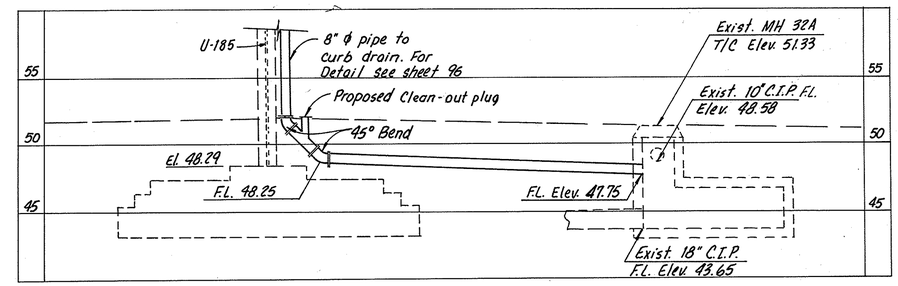

PROFILE
(Looking West)

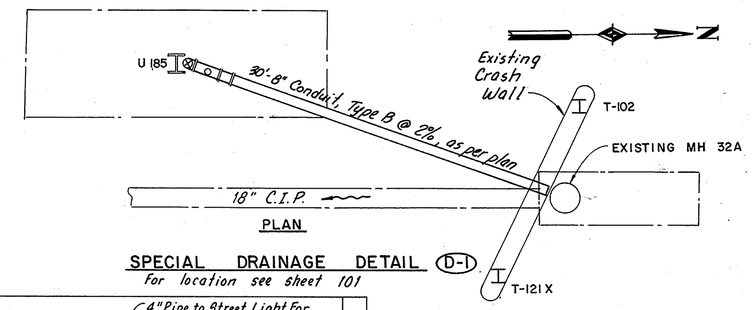

PLAN

SPECIAL DRAINAGE DETAIL (D-1)
For location see sheet 101

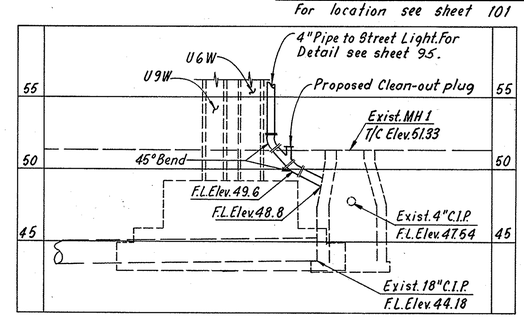

PROFILE
(Looking West)

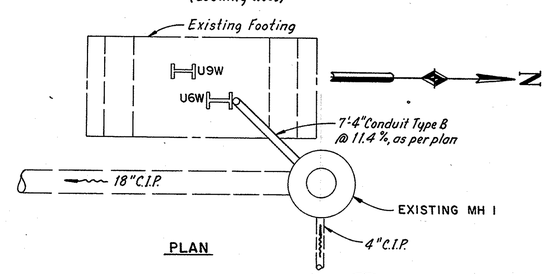

PLAN

SPECIAL DRAINAGE DETAIL (D-2)
For location see sheet 100

EUTHENICS INC.
CONSULTING ENGINEERS
CLEVELAND OHIO

REHABILITATION OF TOWER CITY BRIDGES
PROSPECT AVE., HURON ROAD,
WEST 2ND., 3RD. & 6TH. ST. VIADUCTS

MISCELLANEOUS CONCRETE SUBSTRUCTURE REPAIRS AND DETAILS

CLEVELAND CUYAHOGA COUNTY OHIO

Made LRH	Trcd. REM	Ckd. LJD	Rev. RAB	Scale: No Scale
Date 5-13-78	Date 5-20-78	Date 7-12-82	Date 10-27-82	Sheet 105/170

FHWA REGION	STATE	PROJECT	
5	OHIO	M-ID 99 (9)	

106
170

CUYAHOGA COUNTY
HURON / PROSPECT BRIDGE

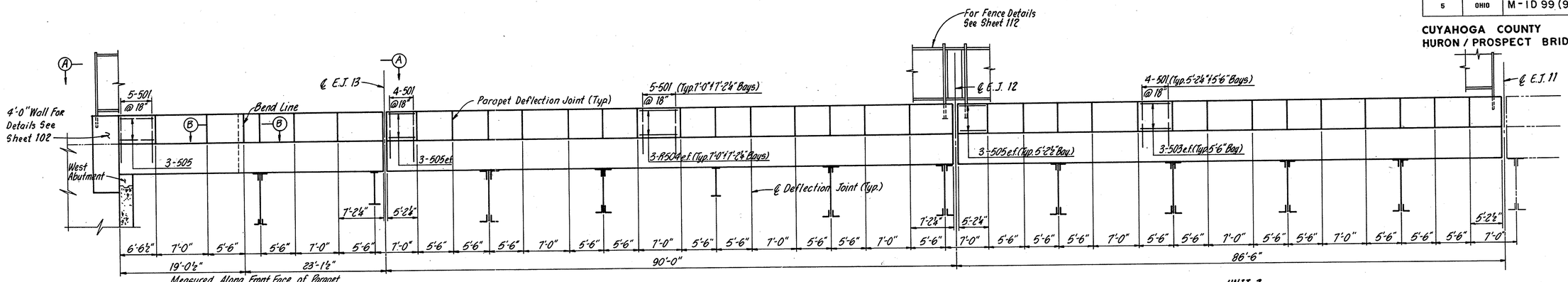

NORTH CURB AND PARAPET ELEVATION DETAIL
PROSPECT AVE. - LOOKING NORTH

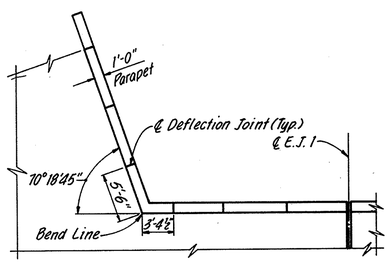

PLAN VIEW A-A

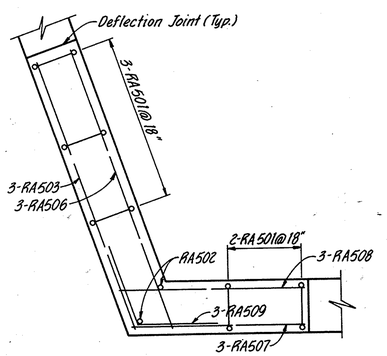

SECTION B-B

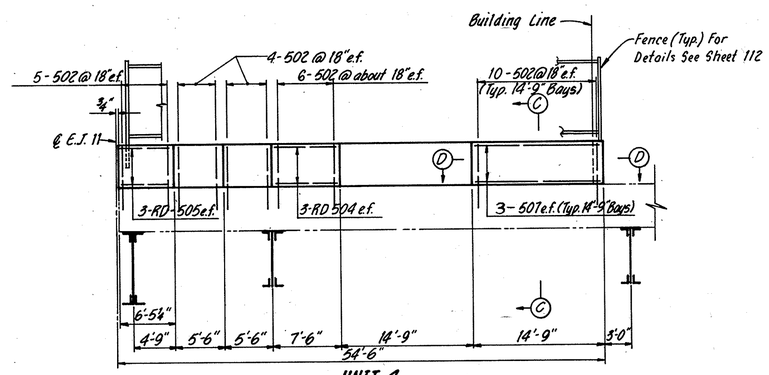

UNIT 4
Unit 4 Reinforcement Shall be Prefix RD

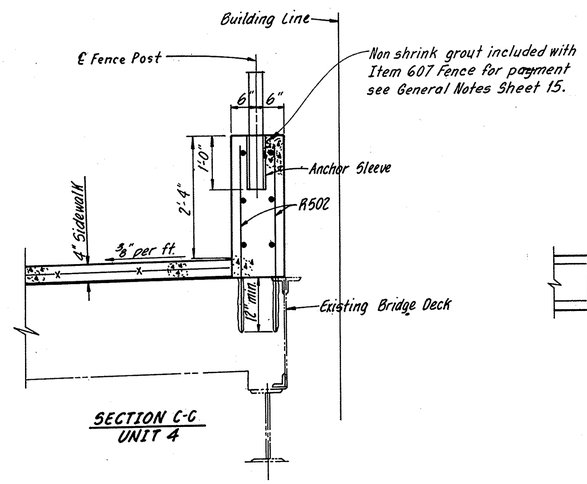

SECTION C-C
UNIT 4

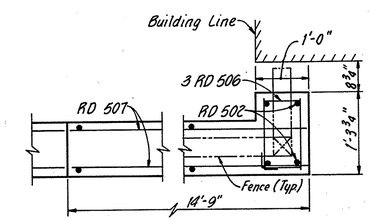

SECTION D-D

NOTES:

A 5'-0" HIGH CHAIN LINKED FENCE SHALL BE PLACED ON TOP OF THE PARAPET. FENCE POSTS AND ANCHOR SLEEVES SHALL BE AT A MAXIMUM SPACING OF 10'-0", WITH A MINIMUM CONCRETE COVER AT DEFLECTIVE JOINTS OF 1'-0". A PERMANENTLY LOCKED GATE WITH 2" MINIMUM MOVEMENT CAPABILITY SHALL BE LOCATED OVER EACH EXPANSION JOINT. SEE DETAILS ON SHEET 111.

FOR PARAPET DEFLECTION JOINT NOTE SEE SHEET 111.

EUTHENICS INC.
CONSULTING ENGINEERS
CLEVELAND OHIO

REHABILITATION OF TOWER CITY BRIDGES
PROSPECT AVE., HURON ROAD,
WEST 2ND., 3RD. & 6TH. ST. VIADUCTS

PARAPET AND FENCE DETAILS

UNITS I THRU 4
PROSPECT AVE.

CLEVELAND CUYAHOGA COUNTY OHIO

Made LJD	Trcd. TK	Ckd. LJD	Rev. RAB	Revised
Date 6-1-82	Date 7-1-82	Date 9-1-82	Date 10-25-82	Sheet 106/170

FHWA REGION	STATE	PROJECT	
5	OHIO	M-ID 99 (9)	

107/170

CUYAHOGA COUNTY
HURON / PROSPECT BRIDGE

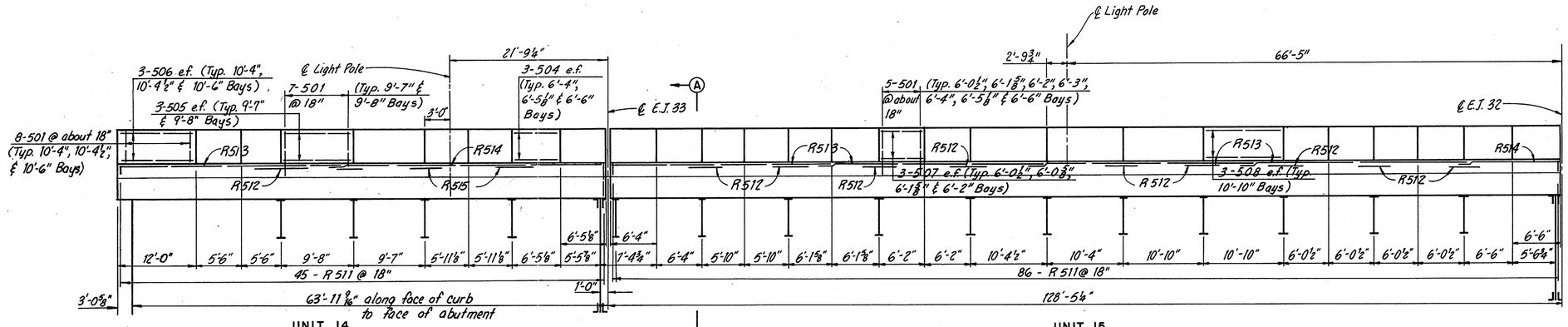

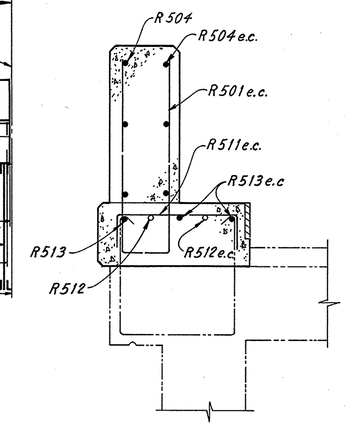

SECTION A-A

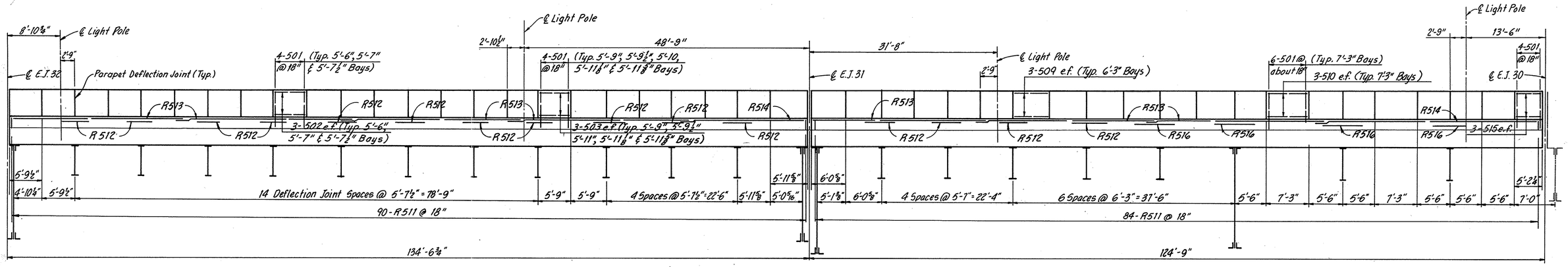

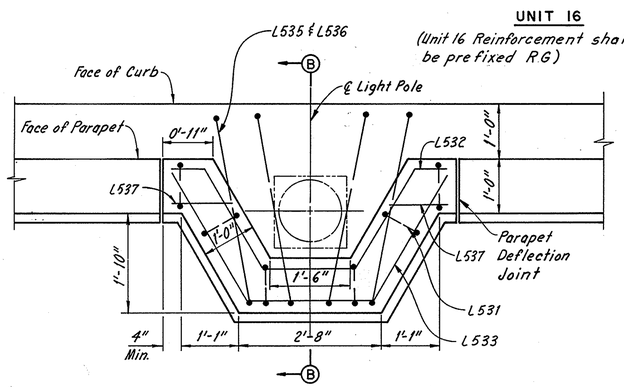

TYPICAL PARAPET DETAIL AT LIGHT POLE
(South Side Huron Rd.)
(Light Blister)

Note:
For Light Blister Bending Diagrams See Sheet 133.

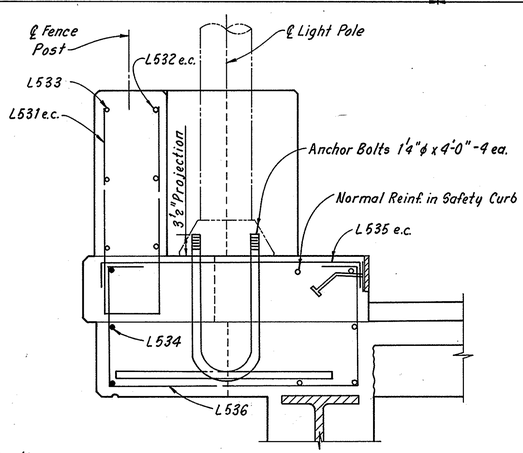

SECTION B-B
(Light Blister)

NOTES:
1. ALL REINFORCING BARS ON THE INSIDE FACE OF PARAPET SHALL BE EPOXY COATED.
2. FOR PARAPET DEFLECTION JOINT NOTE SEE SHEET 111.
3. FOR CHAIN LINK FENCE NOTE SEE SHEET 111.

EUTHENICS INC.
CONSULTING ENGINEERS
CLEVELAND OHIO

REHABILITATION OF TOWER CITY BRIDGES
PROSPECT AVE., HURON ROAD,
WEST 2ND., 3RD. & 6TH. ST. VIADUCTS

PARAPET AND FENCE DETAILS
UNITS 14 THRU 17
HURON ROAD
CLEVELAND CUYAHOGA COUNTY OHIO

Mode LRH	Trcd. TK	Ckd. LJD	Rev. RAB	Revised
Date 9-3-82	Date 9-6-82	Date 9-8-82	Date 10-1-82	Sheet 107/170

FHWA REGION	STATE	PROJECT	
5	OHIO	M-ID 99 (9)	

108
170

CUYAHOGA COUNTY
HURON / PROSPECT BRIDGE

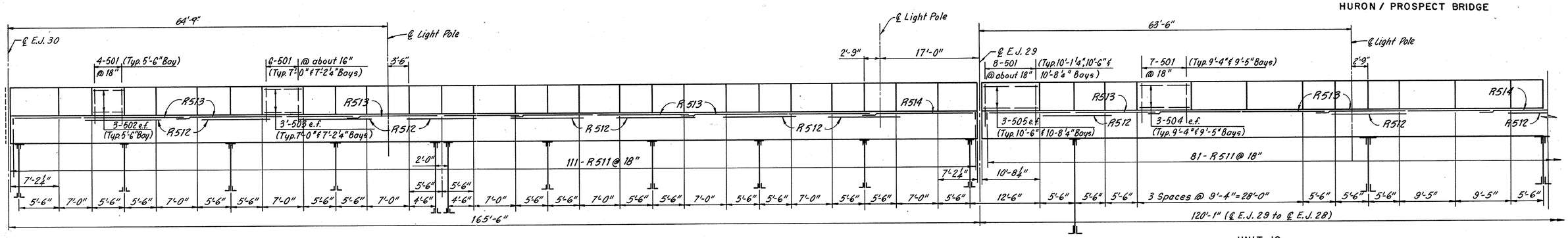

UNIT 18
(Unit 18 Reinforcement shall be prefixed RI)

UNIT 19
(Unit 19 Reinforcement shall be prefixed RJ)

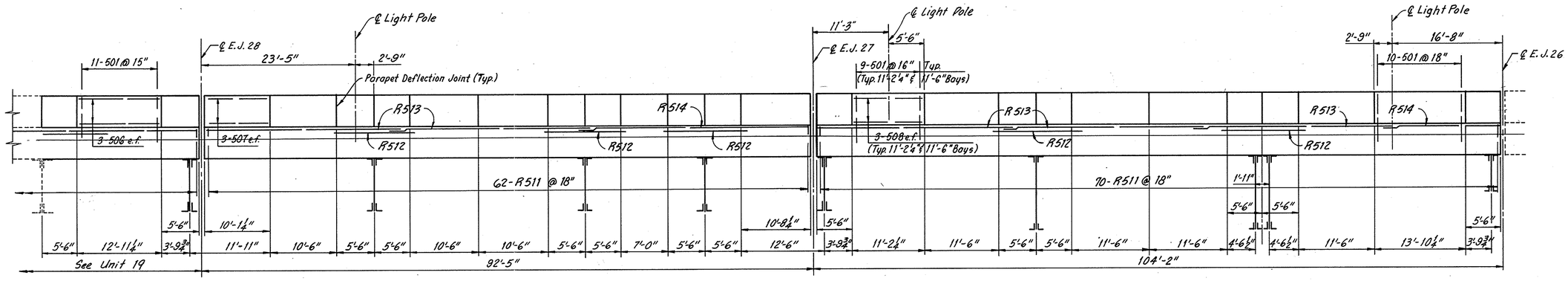

UNIT 20
(Unit 20 Reinforcement shall be prefixed RK)

UNIT 21
(Unit 21 Reinforcement shall be prefixed RL)

NOTES:
1. ALL REINFORCING BARS ON THE INSIDE FACE OF PARAPET SHALL BE EPOXY COATED.
2. FOR PARAPET DEFLECTION JOINT NOTE SEE SHEET 111.
3. FOR CHAIN LINK FENCE NOTE SEE SHEET 111.

EUTHENICS INC.
CONSULTING ENGINEERS
CLEVELAND OHIO

REHABILITATION OF TOWER CITY BRIDGES
PROSPECT AVE., HURON ROAD,
WEST 2ND., 3RD. & 6TH. ST. VIADUCTS

PARAPET AND FENCE DETAILS
UNITS 18 THRU 21
HURON ROAD
CLEVELAND CUYAHOGA COUNTY OHIO

Made LJD	Trcd. TLW	Ckd. LJD	Rev. RAB	Revised
Date 6-3-82	Date 7-2-82	Date 9-1-82	Date 10-25-82	Sheet 108 / 170

FHWA REGION	STATE	PROJECT	
5	OHIO	M-ID 99(9)	

109
170

CUYAHOGA COUNTY
HURON / PROSPECT BRIDGE

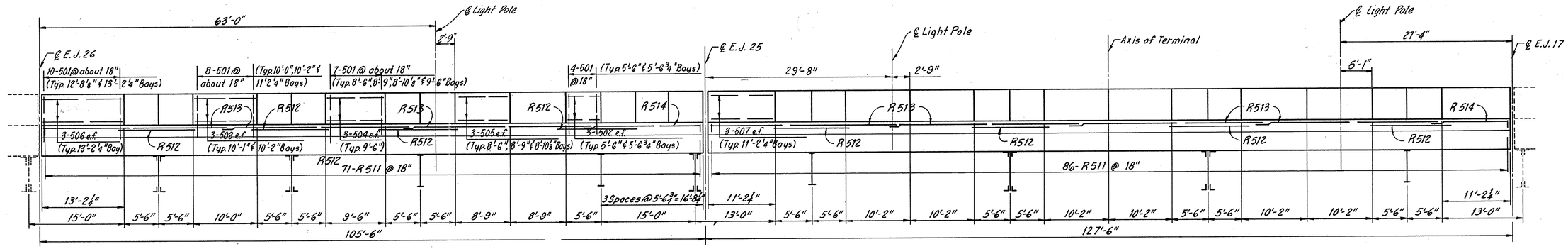

UNIT 22
(Unit 22 Reinforcement shall be Prefixed RM)

UNIT 23
(Unit 23 Reinforcement shall be Prefixed RN)

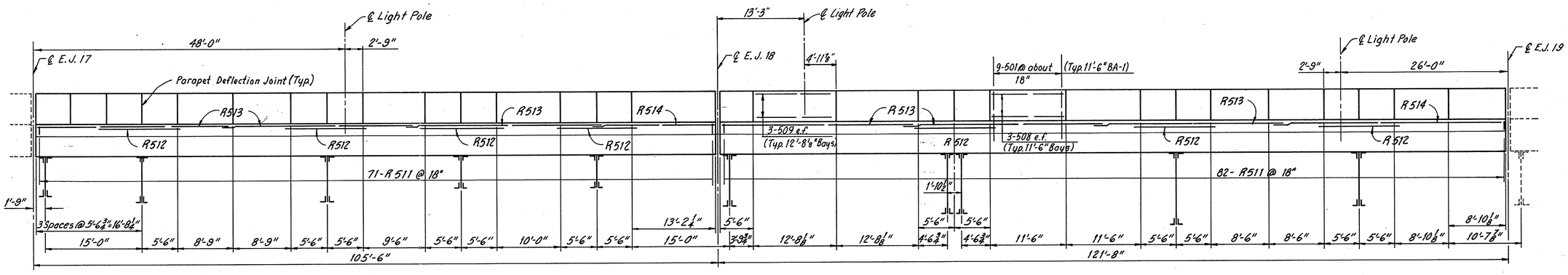

UNIT 24
(Unit 24 Reinforcement shall be Prefixed RO)

UNIT 25
(Unit 25 Reinforcement shall be Prefixed RP)

NOTES:
1. ALL REINFORCING BARS ON THE INSIDE FACE OF PARAPET SHALL BE EPOXY COATED.
2. FOR PARAPET DEFLECTION JOINT NOTE SEE SHEET 111.
3. FOR CHAIN LINK FENCE NOTE SEE SHEET 111.

EUTHENICS INC.
CONSULTING ENGINEERS
CLEVELAND OHIO

REHABILITATION OF TOWER CITY BRIDGES
PROSPECT AVE., HURON ROAD,
WEST 2ND., 3RD. & 6TH. ST. VIADUCTS

PARAPET AND FENCE DETAILS
UNITS 22 THRU 25

HURON ROAD
CLEVELAND CUYAHOGA COUNTY OHIO

Made LJD	Trcd. TK	Ckd. LJD	Rev. RAB	Revised
Date 6-3-82	Date 7-5-82	Date 9-1-82	Date 10-25-82	Sheet 109/170

FHWA REGION	STATE	PROJECT	
5	OHIO	M-ID 99(9)	

110
170

CUYAHOGA COUNTY
HURON / PROSPECT BRIDGE

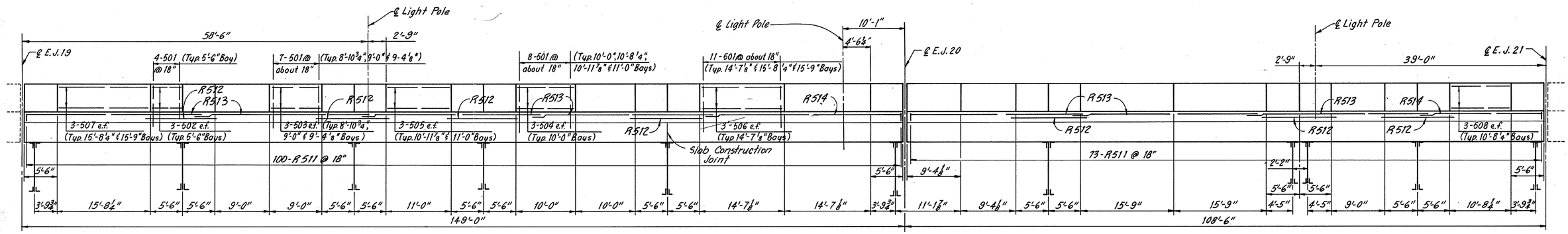

UNIT 26
(Unit 26 Reinforcement shall be Prefixed RQ)

UNIT 27
(Unit 27 Reinforcement shall be Prefixed RR)

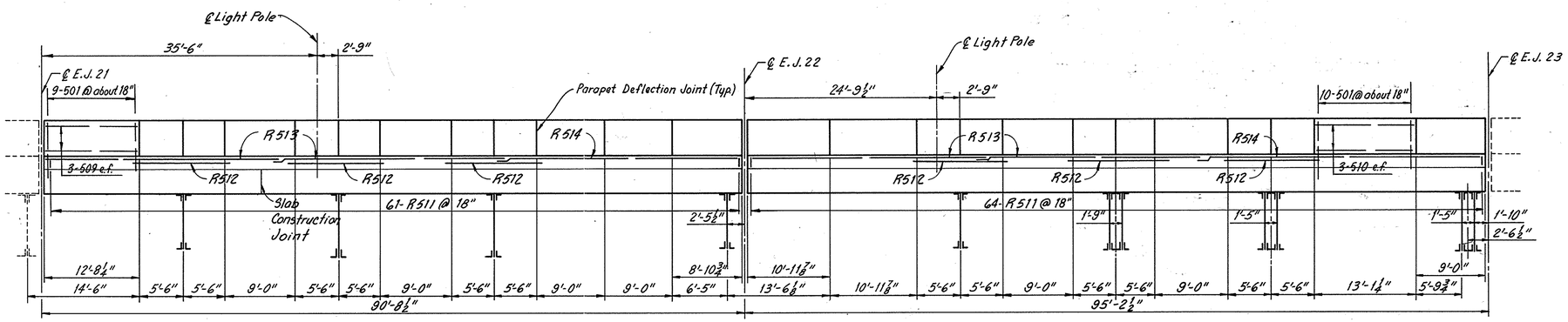

UNIT 28
(Unit 28 Reinforcement shall be Prefixed RS)

UNIT 29
(Unit 29 Reinforcement shall be Prefixed RT)

NOTES:
1. All Reinforcing Bars on the inside face of Parapet shall be Epoxy Coated.
2. For Parapet Deflection Joint Note see Sheet 111.
3. For Chain Link Fence Note see Sheet 111.
4. For Typical Safety Curb & Parapet Detail see Sheet 34.

EUTHENICS INC.
CONSULTING ENGINEERS
CLEVELAND OHIO

REHABILITATION OF TOWER CITY BRIDGES
PROSPECT AVE., HURON ROAD,
WEST 2ND., 3RD. & 6TH. ST. VIADUCTS

PARAPET AND FENCE DETAILS
UNITS 26 THRU 29
HURON ROAD
CLEVELAND CUYAHOGA COUNTY OHIO

Made LJD	Trcd. REM	Ckd. LJD	Rev. RAB	Revised
Date 6-4-82	Date 7-6-82	Date 9-2-82	Date 10-25-82	Sheet 110/170

FHWA REGION	STATE	PROJECT	
5	OHIO	M-ID 99 (9)	

CUYAHOGA COUNTY
HURON / PROSPECT BRIDGE

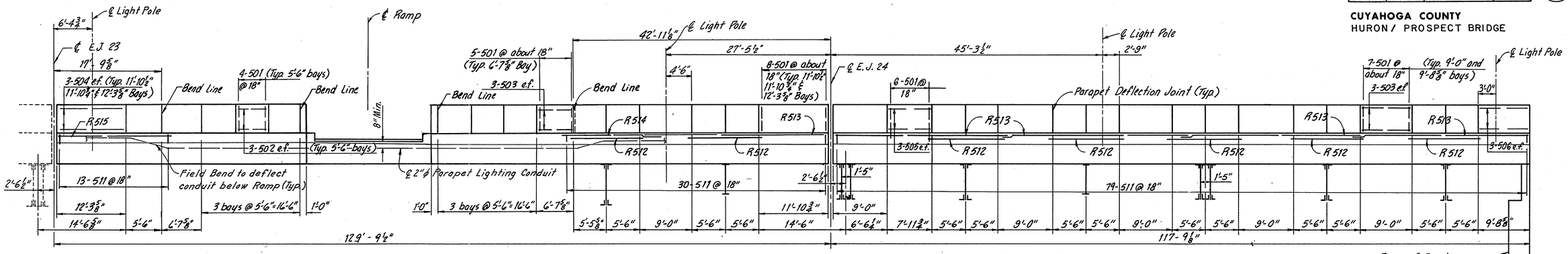

UNIT 30
(Unit 30 Reinforcement shall be Prefixed RU)

UNIT 31
(Unit 31 Reinforcement shall be Prefixed RV)

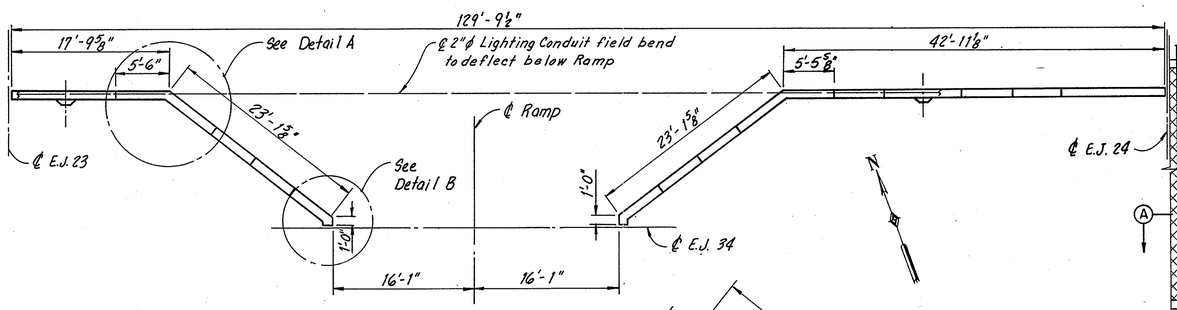

PLAN - SOUTH PARAPET @ RAMP
Unit 30

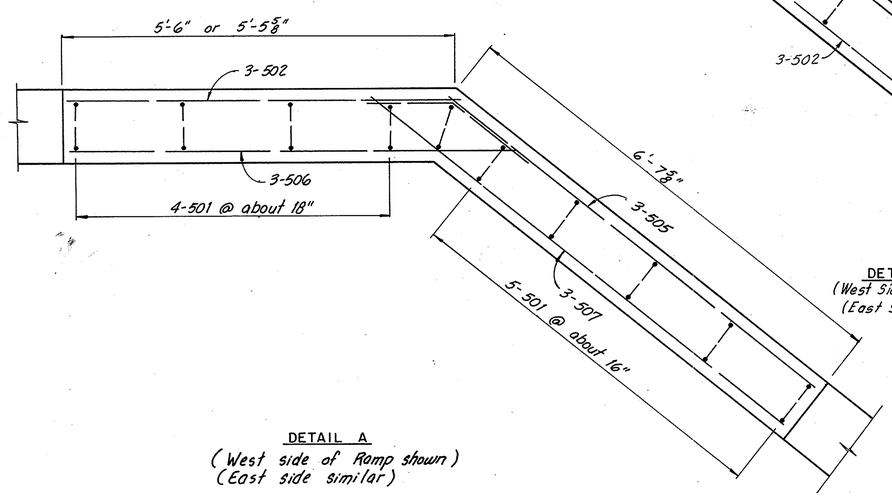

DETAIL A
(West side of Ramp shown)
(East side similar)

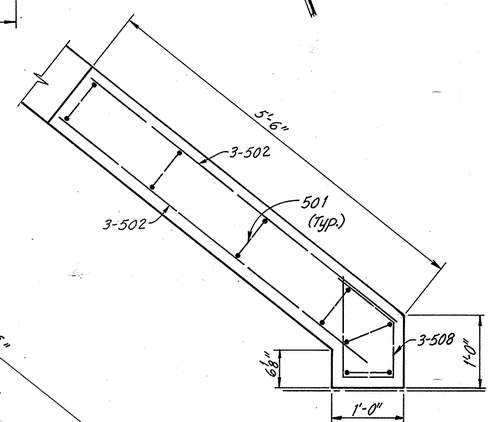

DETAIL B
(West Side of Ramp shown)
(East Side similar)

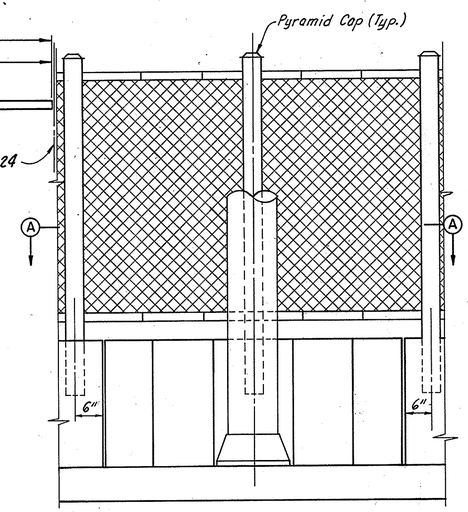

TYPICAL FENCE DETAIL AT LIGHT POLE

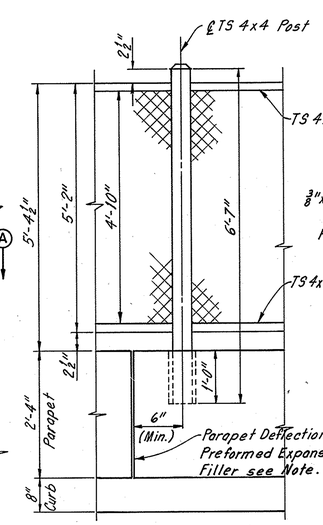

TYPICAL FENCE POST DETAIL

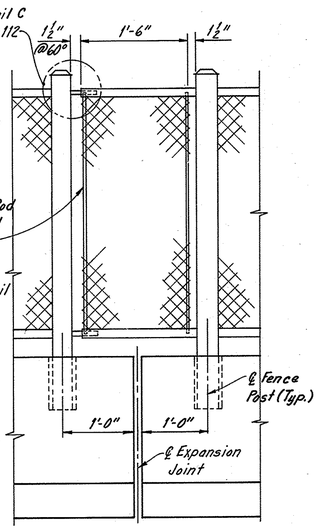

TYPICAL FENCE DETAIL AT EXPANSION JOINT

NOTES:
A STEEL FRAME CHAIN LINKED FENCE SHALL BE PLACED ON TOP OF THE PARAPET. FENCE POSTS AND ANCHOR SLEEVES SHALL BE AT A MAXIMUM SPACING OF 10'-0", WITH A MINIMUM CONCRETE COVER AT DEFLECTIVE JOINTS OF 6".

NOTE: THE PREFORMED EXPANSION JOINT FILLER IN THE RAILING PARAPET DEFLECTION JOINTS MAY BE EITHER 1/4" GRAY SPONGE RUBBER OR 1/4" GRAY CELLULAR POLYVINYL CHLORIDE (P.V.C.) SPONGE. IF RUBBER IS USED IT SHALL MEET THE REQUIREMENTS OF AASHO M-153. THE DEFLECTION JOINT EXTENDS FROM TOP OF PARAPET TO FIRST CONSTRUCTION JOINT. THE CONCRETE PARAPET AND PREFORMED EXPANSION JOINT FILLER IS INCLUDED FOR PAYMENT WITH SUPERSTRUCTURE CONCRETE, BID ITEM 511.
CONCRETE PARAPETS SHALL BE PLACED IN ALTERNATE SECTIONS BY THE USE OF BULKHEADS. CLOSING SECTIONS SHALL BE PLACED AFTER REMOVAL OF BULKHEADS AND AFTER PLACEMENT OF SPONGE FILLER. FILLER SHALL BE FLUSH WITH SURFACE OF CONCRETE AND EXPOSED EDGES SHALL BE FREE OF MORTAR.

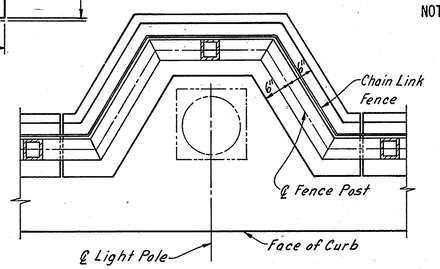

SECTION A-A

NOTES:
1. ALL REINFORCING BARS ON THE INSIDE FACE OF PARAPET SHALL BE EPOXY COATED.
2. FOR TYPICAL ANCHOR FOR FENCE POSTS SEE SHEET 112.

EUTHENICS INC.
CONSULTING ENGINEERS
CLEVELAND OHIO

REHABILITATION OF TOWER CITY BRIDGES
PROSPECT AVE., HURON ROAD,
WEST 2ND., 3RD. & 6TH. ST. VIADUCTS

PARAPET AND FENCE DETAILS
UNITS 30 AND 31
HURON ROAD

CLEVELAND CUYAHOGA COUNTY OHIO

Mode LJD	Trcd. TK	Ckd. LJD	Rev. RAB	Revised
Date 6-4-82	Date 7-7-82	Date 9-2-82	Date 10-25-82	Sheet 111 / 170

FHWA REGION	STATE	PROJECT	
5	OHIO	M-ID 99 (9)	

112/170

CUYAHOGA COUNTY
HURON / PROSPECT BRIDGE

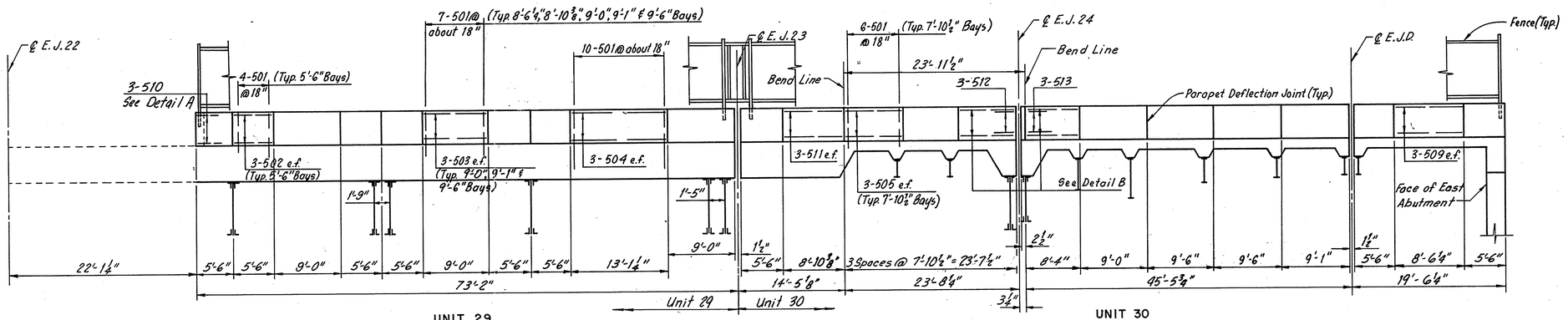

UNIT 29
(Unit 29 Reinforcement shall be Prefixed RX)

NORTH PARAPET

UNIT 30
(Unit 30 Reinforcement shall be Prefixed RY)

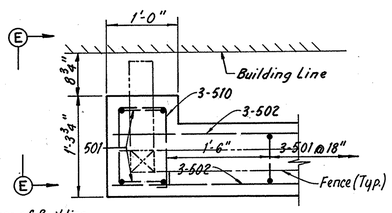

DETAIL A

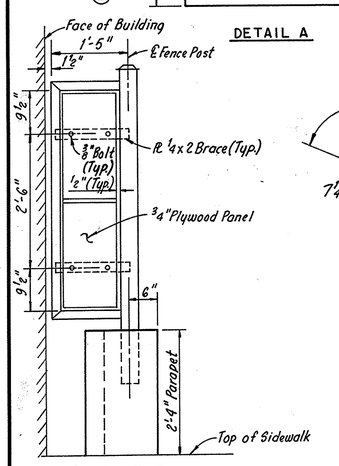

VIEW E-E

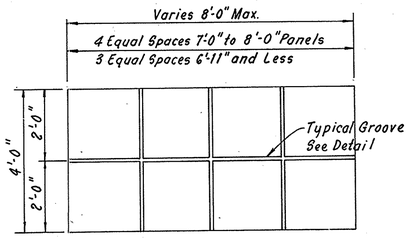

TYPICAL PLYWOOD PANEL DETAIL

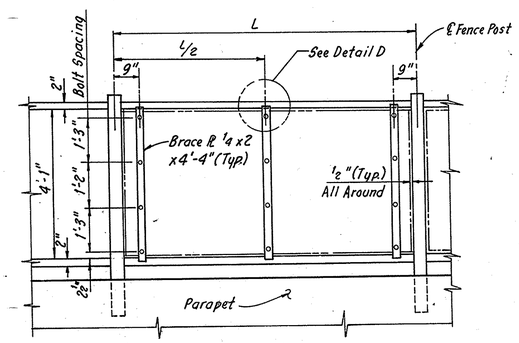

TYPICAL PANEL BRACING DETAIL

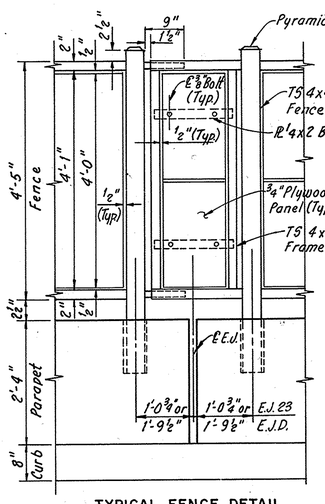

TYPICAL FENCE DETAIL
(At Expansion Joint)

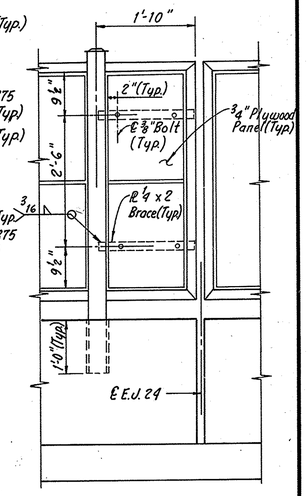

TYPICAL FENCE DETAIL
At Expansion Joint 24
(West Side of E.J. 24 Shown East Side Similar)

TYPICAL GROOVE DETAIL

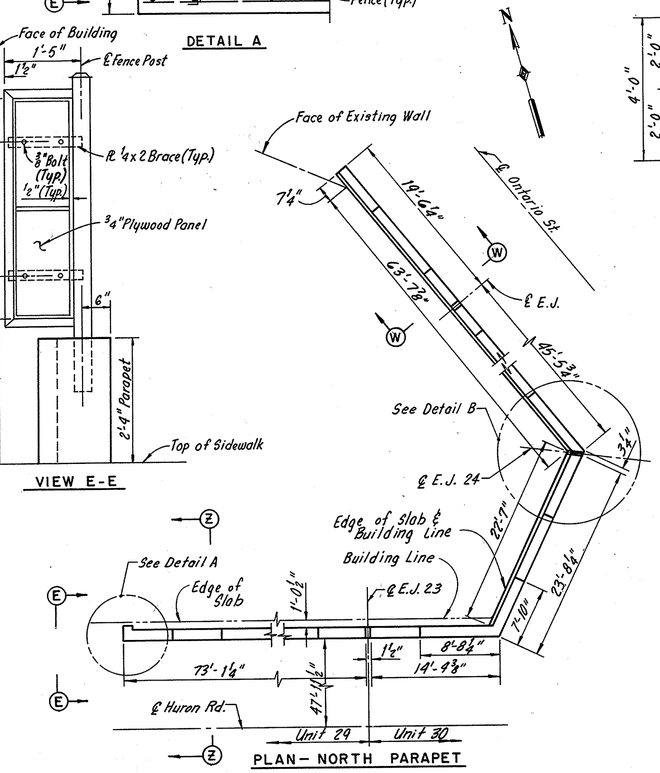

PLAN - NORTH PARAPET

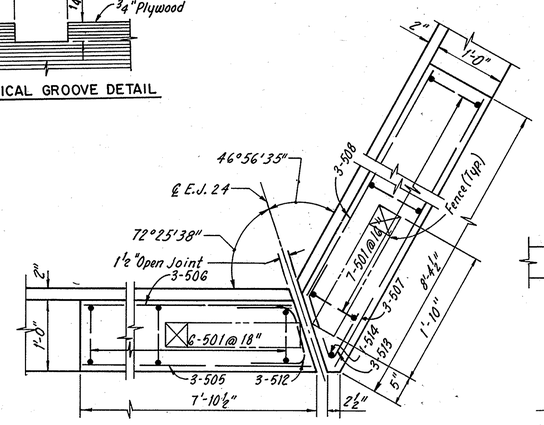

DETAIL B

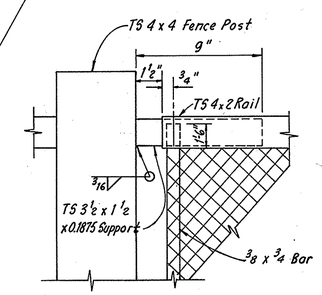

DETAIL C
For Location See Sheet 111

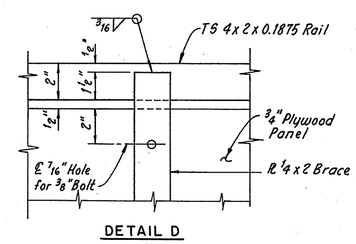

DETAIL D

NOTES:
1. ALL REINFORCING BARS ON THE INSIDE FACE OF PARAPET SHALL BE EPOXY COATED.
2. FOR PARAPET DEFLECTION JOINT NOTE SEE SHEET 111.
3. FOR CHAIN LINK FENCE SEE SHEET 111.
4. FOR SECTION W-W & Z-Z SEE SHEET 34.

EUTHENICS INC.
CONSULTING ENGINEERS
CLEVELAND OHIO

REHABILITATION OF TOWER CITY BRIDGES
PROSPECT AVE., HURON ROAD,
WEST 2ND, 3RD, & 6TH ST. VIADUCTS

NORTH PARAPET & FENCE DETAILS

UNITS 29 & 30
HURON ROAD
CLEVELAND CUYAHOGA COUNTY OHIO

Made LJD	Trcd. TLW	Ckd. LJD	Rev. RAB	Revised
Date 6-7-82	Date 7-8-82	Date 9-2-82	Date 10-25-82	Sheet 112/170

FHWA REGION	STATE	PROJECT	
	OHIO	M-ID 99 (9)	

113 / 170

CUYAHOGA COUNTY
HURON / PROSPECT BRIDGE

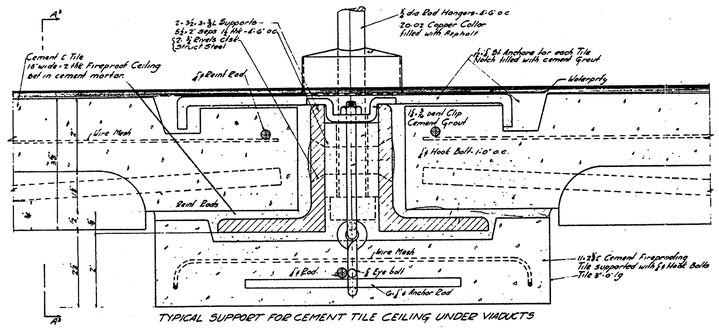

TYPICAL SUPPORT FOR CEMENT TILE CEILING UNDER VIADUCTS

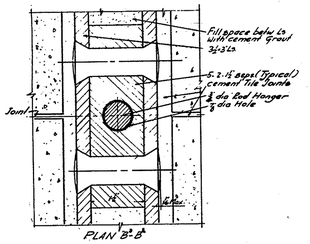

PLAN B-B

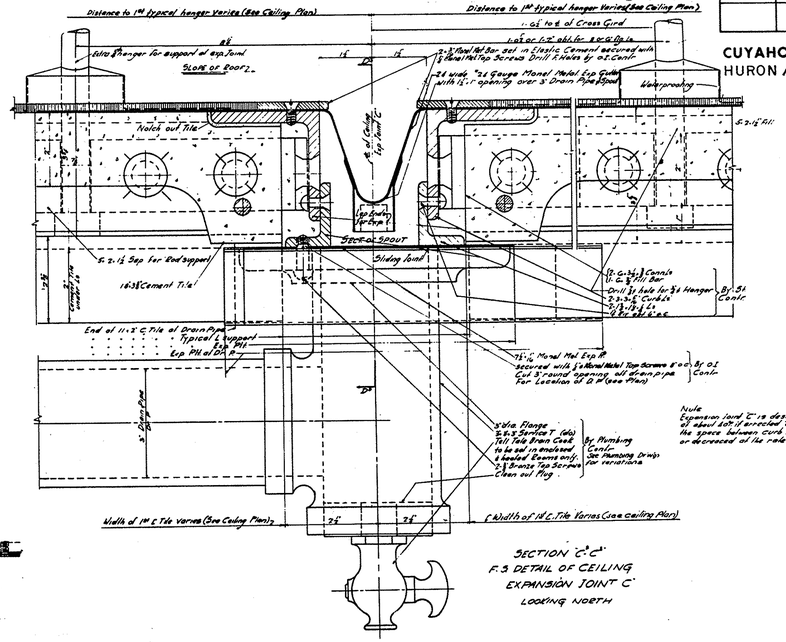

Note
Expansion Joint C is designed to be erected at about 50° F or colder. If erected at a different temp the space between curb to shall be increased or decreased at the rate of ⅛ per 10° F variation

SECTION C-C
F.S DETAIL OF CEILING
EXPANSION JOINT C
LOOKING NORTH

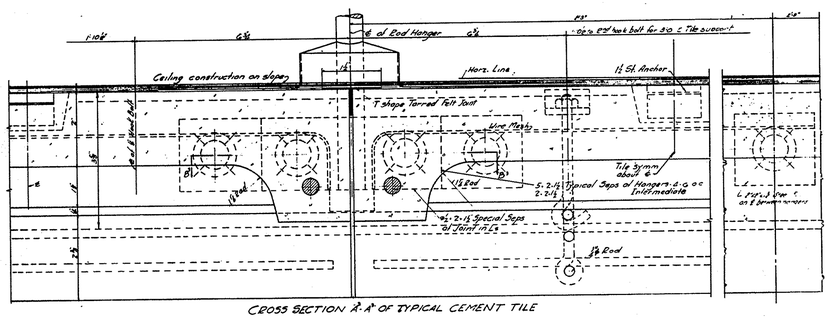

CROSS SECTION A-A OF TYPICAL CEMENT TILE

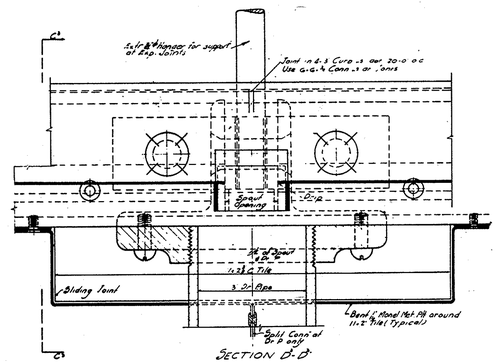

SECTION D-D

REVISIONS

CLEVELAND UNION TERMINALS CO
PROSPECT AVE VIADUCT
EAST SECTION
GRIMM ANDERSON PARKER & WHITE
CLEVELAND OHIO CHICAGO ILL

F.S DETAIL OF TYPICAL EXP JOINT "C" & TYPICAL CEMENT TILE CEILING.

PROJECT NO. 12-1-1-1

GENERAL NOTES

FHWA REGION	STATE	PROJECT	
5	OHIO	M-ID 99 (9)	

114/170

CUYAHOGA COUNTY
HURON/ PROSPECT BRIDGE

GENERAL NOTES

SPECIFICATIONS

THESE NOTES ARE SUPPLEMENTAL TO ITEMS 625 AND 713 OF THE STATE OF OHIO DEPARTMENT OF TRANSPORTATION CONSTRUCTION AND MATERIAL SPECIFICATIONS.

GENERAL

THE EXISTING AND FINAL LOCATIONS AND DETAILS OF M.E.L.P. FACILITIES ARE SHOWN ON THE UTILITY PLANS. THE RECONSTRUCTION OF THE FACILITIES SHALL INCLUDE THE REMOVAL AND REPLACEMENT OF MANHOLES, SPLICING CHAMBERS, PULL BOXES, LIGHT POLES AND NEW DUCT RUNS AS SHOWN ON THE PLANS.

THIS WORK SHALL CONSIST OF FURNISHING ALL LABOR, MATERIALS AND EQUIPMENT, EXCEPT AS NOTED, AND INSTALLING COMPLETELY ALL SYSTEMS AND EQUIPMENT SHOWN OR SPECIFIED IN ACCORDANCE WITH THE PLANS AND SPECIFICATIONS, OR AS DIRECTED BY THE ENGINEER.

THIS PROJECT HAS BEEN DESIGNED ON THE BASIS OF FULL LIGHTING WITH AN AVERAGE ILLUMINATION OF 3.62 FT. CD (MAINT.) AND A MAXIMUM UNIFORMITY RATIO OF 1.8 TO 1.

THE POWER FOR THE PROJECT SHALL BE SUPPLIED BY:

CITY OF CLEVELAND
DIVISION OF LIGHT & POWER (M.E.L.P.)
1201 LAKESIDE AVENUE
CLEVELAND, OHIO 44114

ALL WORK IN THIS CONTRACT SHALL CONFORM TO THE LATEST NATIONAL ELECTRIC SAFETY CODE AND OSHA, EXCEPT WHERE LOCAL REGULATIONS ARE MORE STRINGENT, IN WHICH CASE LOCAL REGULATIONS SHALL GOVERN.

THE ELECTRICAL CONTRACTOR SHALL, UNDER THE SUPERVISION OF A REPRESENTATIVE OF THE DIVISION OF LIGHTS AND POWER, CITY OF CLEVELAND, PERFORM ALL WORK NECESSARY TO COMPLETE THE INSTALLATION OF THE M.E.L.P. FACILITIES TO INCLUDE THE FOLLOWING:

THE POWER LINES IN THE NORTH SIDEWALK OF HURON ROAD MUST REMAIN IN SERVICE AT ALL TIMES.

A TEMPORARY BY PASS POWER LINE SYSTEM OF FOUR (4) CABLES SHALL BE EITHER SUPPORTED OFF THE OVERHANG GIRDERS IN STEEL OR FIBERGLASS UTILITY CONDUIT ON THE SOUTH SIDE OF HURON ROAD STRUCTURE OR SUPPORTED ON POWER POLES LOCATED IN THE PARKING LOT SOUTH OF THE BRIDGE. THE CONTRACTOR SHALL SUBMIT HIS METHOD OF SUPPORT TO THE ENGINEER FOR HIS APPROVAL. THE TEMPORARY CABLE SHALL EXTEND FROM SUPERIOR AVENUE ON THE WEST TO ONTARIO STREET ON THE EAST APPROXIMATELY 2,300 LINEAR FEET. THE TEMPORARY CABLES SHALL BE WELL MARKED AS HIGH POWER LINES AND PROTECTED AS REQUIRED DURING CONSTRUCTION.

THE NEW POWER LINES SHALL UTILIZE SIX (6) EXISTING DUCTS ON THE NORTH SIDEWALK OF HURON ROAD, REHABILITATED AT THE EXPANSION JOINTS AS PER PLAN. FOUR (4) OF THE DUCTS SHALL CARRY THE FOUR (4) POWER CABLES WITH THE REMAINING TWO (2) DUCTS USED AS SPARES. M.E.L.P. PERSONNEL SHALL CUT THE EXISTING CABLE. THE ELECTRICAL CONTRACTOR SHALL PULL AND SPLICE THE NEW CABLE TO THE EXISTING CABLE. AN ADDITIONAL LENGTH OF NINE (9) LINEAR FEET OF CABLE SHALL BE PROVIDED AT EACH MANHOLE; ONE AT EACH END OF THE PROJECT AND TWO ON THE STRUCTURE FOR SPLICING PURPOSES.

ALL EXISTING MANHOLE LIDS, FRAMES AND SPLICING CHAMBER COVERS ON MANHOLES AND CHAMBERS DESIGNATED FOR REMOVAL SHALL BE CAREFULLY REMOVED AND, IF ACCEPTABLE TO THE ENGINEER, SHALL BE REUSED OR DELIVERED TO M.E.L.P. IF UNACCEPTABLE, THE ELECTRICAL CONTRACTOR WILL DISPOSE OF THEM OFF THE PROJECT SITE.

THE EXISTING LIGHTING SYSTEM THROUGHOUT THE PROJECT WILL BE REPLACED AS SHOWN ON THE PLANS TO INCLUDE THE REUSE OF TWO OF THE EXISTING DUCTS IN THE SIDEWALK; ONE FOR LIGHTING WIRING AND ONE FOR A SPARE.

THE EXISTING STREET LIGHTING FOR PROSPECT AVENUE AND HURON ROAD RECEIVE THEIR POWER FROM ONTARIO STREET ON THE EAST. DURING CONSTRUCTION STREET LIGHTING ON THE BRIDGES MUST REMAIN IN SERVICE. THE CONTRACTOR SHALL PROVIDE TEMPORARY SERVICE LINES TO MAINTAIN THE STREET LIGHTING. THE CONTRACTOR SHALL SUBMIT TO THE ENGINEER FOR APPROVAL HIS PROPOSED METHOD OF TEMPORARY LIGHTING.

THE CONTRACTOR MUST PROVIDE FOR HIS OWN MEANS OF ELECTRICAL POWER DURING CONSTRUCTION, EITHER BY GAS GENERATOR, NEGOTIATING WITH A PRIVATE PROPERTY OWNER, OR OTHER MEANS

TWO NEW CONCRETE ENCASED DUCTS SHALL BE INSTALLED OFF THE STRUCTURE TO TIE INTO THE EXISTING MANHOLES, AS PER PLAN, IN ONTARIO STREET AND SUPERIOR AVENUE. ONE CONCRETE ENCASED DUCT SHALL SUPPLY POWER FOR THE LIGHTING SYSTEM IN THE SOUTH PARAPET OF HURON ROAD, ONE FROM ONTARIO STREET AND ONE FROM SUPERIOR AVENUE AS PER PLAN.

DESCRIPTION OF WORK

THE EXTENT OF SITE POWER AND LIGHTING SYSTEMS ARE SHOWN ON THE DRAWINGS. SITE ELECTRICAL WORK INCLUDES, BUT IS NOT LIMITED TO, THE FOLLOWING:

1. EXCAVATION FOR CONDUIT UNDERGROUND SYSTEMS.
2. INSTALLATION OF UNDERGROUND BRANCH CIRCUIT CONDUCTORS AND DUCTS FROM THE EXISTING BRIDGES OF PROSPECT AVENUE AND HURON ROAD TO THE EXISTING MANHOLES IN ONTARIO STREET AND SUPERIOR AVENUE.
3. REMOVE ALL EXISTING PULL BOXES, LIGHT POLES AND DESIGNATED MANHOLES BY ELECTRICAL CONTRACTOR.
4. FURNISH AND INSTALL NEW POLE BASES, LIGHT POLES AND PULL BOXES, AS PER PLANS.
5. FURNISH AND INSTALL NEW DUCTS WHEREVER THE STRUCTURAL DECK IS OPENED TO INCLUDE EXPANSION JOINTS AND DEVICES FOR WIRING AND CONNECTIONS.
6. FURNISH AND INSTALL ALL LUMINAIRES, LAMPS AND RELATED ACCESSORIES.
7. TEST COMPLETE ELECTRICAL CIRCUITRY, INCLUDING LAMPS AND CONTROLS.
8. INSTALL TEMPORARY POWER CABLES IN HURON ROAD, AS PER PLANS AND REROUTE NEW POWER CABLES INTO EXISTING DUCTS, PULL AND SPLICE IN NEW CABLES.
9. REMOVE EXISTING POWER CABLES.
10. INSTALL AND CONNECT A LIGHTING SYSTEM IN SOUTH PARAPET ON HURON ROAD TO INCLUDE DUCTS, LIGHT POLES, LUMINAIRES, CABLES, LAMPS AND ACCESSORIES.
11. TEMPORARY MAINTENANCE OF EXISTING LIGHTING SYSTEM DURING CONSTRUCTION.
12. FEES AND PERMITS.

JOB CONDITIONS

THE CONTRACTOR SHALL INSPECT THE LOCATION OF CONSTRUCTION/INSTALLATION OF ELECTRICAL SYSTEM COMPONENTS PRIOR TO COMMENCEMENT OF THE WORK IN THIS SECTION. HE SHALL NOTIFY THE ENGINEER OF ANY INADEQUACIES IN THE CONSTRUCTION PLANS AS IT MAY AFFECT WORK TO BE INSTALLED UNDER THIS SECTION. THE CONTRACTOR SHALL LAYOUT THE LOCATION OF HIS WORK IN ACCORDANCE WITH THE PLANS, SPECIFICATIONS AND CONSTRUCTION PHASES.

SUBMISSION OF A BID WILL BE CONSIDERED SUFFICIENT EVIDENCE THAT THE CONTRACTOR HAS COMPLIED WITH THESE REQUIREMENTS.

NO EXTRA ALLOWANCE WILL BE MADE TO THE CONTRACT PRICE FOR WORK EVIDENT AND OBVIOUS PRIOR TO SUBMITTING OF BID.

DRAWINGS AND SPECIFICATIONS

THE DRAWINGS AND SPECIFICATIONS SHALL BE CONSIDERED TYPICAL OF THE WORK TO BE DONE AND OF THE ARRANGEMENT DESIRED. ALL ACCESORIES AND APPURTENANCES WHICH THE ENGINEER DEEMS FUNCTIONALLY NECESSARY FOR A COMPLETE INSTALLATION SHALL BE FURNISHED AND INSTALLED, WHETHER OR NOT INDICATED OR DESCRIBED.

INTERFERENCE AND ERRONEOUS LOCATIONS

THE LOCATIONS OF NEW LIGHT POLES AND SPLICING CHAMBERS SHALL BE IN THE EXISTING LOCATIONS AS INDICATED ON THE DRAWINGS AND ARE APPROXIMATE ONLY. EXACT LOCATIONS SHALL BE AS DETERMINED OR APPROVED BY THE ENGINEER DURING CONSTRUCTION.

IN CASE OF INTERFERENCE WITH OTHER WORK, OR OF ERRONEOUS LOCATIONS WITH RESPECT TO EQUIPMENT OR STRUCTURES, THE CONTRACTOR SHALL FURNISH ALL LABOR AND MATERIALS NECESSARY TO COMPLETE THE WORK IN AN APPROVED MANNER.

SHOP DRAWINGS

IN ADDITION TO THE REQUIREMENTS OF 105 & 501 THE CONTRACTOR SHALL SUPPLY SHOP DRAWINGS ON THE FOLLOWING ITEMS OF EQUIPMENT:

1. CABLE AND CABLE SPLICES;
2. DUCTS AND DUCT ACCESSORIES; AND
3. DRAIN PIPES AND ACCESSORIES.

DEFINITIONS

WHEREVER IN THESE SPECIFICATIONS OR IN ANY DOCUMENTS OR INSTRUCTIONS IN CONSTRUCTION WHERE THESE SPECIFICATIONS GOVERN THE INTENT AND MEANING OF THE TERMS "THE CITY" OR "THE CITY OF CLEVELAND" SHALL BE INTERPRETED TO MEAN THE DIRECTOR, DEPARTMENT OF PUBLIC UTILITY OF THE CITY OF CLEVELAND.

STATUS OF CITY INSPECTORS

INSPECTORS AS DESIGNATED BY THE CITY SHALL BE AUTHORIZED TO INSPECT ALL WORK DONE AND MATERIALS FURNISHED. SUCH INSPECTIONS MAY EXTEND TO ALL OR ANY PART OF THE WORK AND TO THE PREPARATION OR MANUFACTURER OF THE MATERIALS TO BE USED IN THE WORK. THE CITY INSPECTOR, AS DESIGNATED BY THE DIRECTOR OF PUBLIC UTILITIES, SHALL MAKE WORK INSTRUCTIONS THROUGH THE PROJECT ENGINEER.

FEEDER SHUTDOWN

A FEEDER SHUTDOWN SCHEDULE WITH DATES AND APPROXIMATE SHUTDOWN TIMES IS TO BE SUBMITTED TO THE CITY OF CLEVELAND, DIVISION OF LIGHT AND POWER, FOR APPROVAL TWO (2) WEEKS BEFORE A FEEDER SHUTDOWN IS REQUIRED. DUE TO THE NATURE OF THE LOADING OF THE FEEDERS AND THE SEASON OF THE YEAR, IT MAY BE NECESSARY TO HAVE SOME OF THE FEEDER SHUTDOWNS ON OFF PEAK DAYS, OR OFF-HOURS. THIS DETERMINATION WILL BE MADE BY MR. SESLER TITUS, SYSTEM OPERATING ENGINEER OF THE DIVISION OF LIGHT AND POWER.

ALL FEEDER SHUTDOWNS SHALL BE CONFIRMED BY THE CONTRACTOR ONE (1) DAY IN ADVANCE OF ALL SCHEDULED JOBS WITH THE SYSTEMS OPERATING ENGINEER. ALL SWITCHING WILL BE DONE BY THE CITY OF CLEVELAND, DIVISION OF LIGHT AND POWER.

UTILITIES

AT LEAST TWO (2) WEEKS BEFORE ANY WORK IS BEGUN THE CONTRACTOR SHALL NOTIFY ALL PUBLIC OR PRIVATE UTILITIES WHO MAY BE AFFECTED BY THE SCOPE OF THE PROJECT, INCLUDING ANY SERVICES, OR STRUCTURES WHICH ARE AFFECTED BUT NOT SHOWN ON THESE PLANS. HE SHALL CONDUCT HIS OPERATIONS IN SUCH A MANNER AS TO AVOID DAMAGES TO ANY AND ALL UTILITIES.

FOLLOWING IS A LIST OF THE KNOWN UTILITIES WITHIN THE LIMITS OF CONSTRUCTION:

DEPARTMENT OF PUBLIC UTILITIES
DIVISION OF WATER AND HEAT
1201 LAKESIDE AVENUE
CLEVELAND, OHIO 44114

DIV. OF WATER POLLUTION CONTROL
1825 LAKESIDE AVENUE
CLEVELAND, OHIO 44114

DIV. OF LIGHT AND POWER
1201 LAKESIDE AVENUE
CLEVELAND, OHIO 44114

DEPARTMENT OF PUBLIC SAFETY
POLICE & FIRE COMMUNICATION SYST.
310 CARNEGIE AVENUE
CLEVELAND, OHIO 44114

DIV. OF TRAFFIC ENG. & PARKING
2001 PAYNE AVENUE - 3RD FLOOR
CLEVELAND, OHIO 44114

DEPARTMENT OF PUBLIC SERVICE
CITY HALL - ROOM 227
601 LAKESIDE AVENUE
CLEVELAND, OHIO 44114

EAST OHIO GAS COMPANY
1201 EAST 55TH STREET
CLEVELAND, OHIO 44114

CLEVELAND ELEC. ILLUMINATING CO.
55 PUBLIC SQUARE
CLEVELAND, OHIO 44113

OHIO BELL TELEPHONE COMPANY
100 ERIEVIEW PLAZA
CLEVELAND, OHIO 44114

UTILITY PROTECTION SERVICE
1-800-362-2764

TIE INTO EXISTING MANHOLES

WHEN NEW CABLES AND/OR DUCT BANKS ARE CONNECTED INTO AN EXISTING MANHOLE, PART OF THE WALL SHALL BE CAREFULLY BROKEN TO RECEIVE THE NEW CABLES OR DUCT BANK. AFTER THE INSTALLATION THE EXISTING MANHOLE WALL SHALL BE REPAIRED, PATCHED AND SEALED. CABLES SHALL BE PROTECTED DURING THIS WORK WITH EXTREME CARE. ANY DAMAGE TO EXISTING CABLES SHALL BE REPAIRED AT THE CONTRACTOR'S EXPENSE UNDER THE DIRECT SUPERVISION OF THE DIVISION OF LIGHT AND POWER.

ADDITIONAL WORK

ATTENTION IS CALLED TO THE FACT THAT THE WORK OF THIS CONTRACT INCLUDES CERTAIN PERFORMANCES AS INCIDENTAL TO THE ITEMIZED REQUIREMENTS. SOME OF THESE INCIDENTALS ARE AS FOLLOWS: ALL THE EXCAVATION, BACKFILLING, SHEETING, SHORING, TEMPORARY AND FINAL REPAVING. SAND BACKFILL SHALL CONFORM TO THE STATE OF OHIO DEPARTMENT OF HIGHWAY CONSTRUCTION AND MATERIAL SPECIFICATIONS AND SHALL BE PLACED UNDER EXISTING PAVEMENT AND SIDEWALK. FOR THESE AND OTHER INCIDENTAL PERFORMANCES OF LIKE NATURE THE STATE WILL MAKE NO SPECIFIC OR SEPARATE PAYMENT OR ALLOWANCE. THE COST SHALL BE INCLUDED IN THE PRICE BID FOR OTHER VARIOUS ITEMS OF WORK TO BE DONE UNDER THIS CONTRACT.

APPROVAL AND CODE REQUIREMENTS

ELECTRICAL DEVICES AND MATERIALS SHALL BE APPROVED BY THE UNDERWRITERS' LABORATORIES, INC., WHEREVER STANDARDS HAVE BEEN ESTABLISHED BY THAT AGENCY. WHERE UNDERWRITERS' LABORATORIES, INC. APPROVAL FOR EQUIPMENT IS NOT AVAILABLE, THE ELECTRICAL CONTRACTOR SHALL SUBMIT CERTIFIED TEST REPORTS OF AN ADEQUATELY EQUIPPED, RECOGNIZED, INDEPENDENT TESTING LABORATORY, APPROVED BY THE LOCAL INSPECTING AUTHORITY, INDICATING THAT THE EQUIPMENT IS IN CONFORMANCE WITH LOCAL CODE REQUIREMENTS, OR ANY OTHER CODE REQUIREMENTS.

IN LIEU OF THE TEST REPORTS, WRITTEN APPROVAL OF THE EQUIPMENT BY THE LOCAL ELECTRICAL INSPECTING AUTHORITY WILL BE ACCEPTABLE. THE CONTRACTOR SHALL PAY ALL COSTS OF TESTS AND/OR INSPECTIONS NECESSARY FOR APPROVAL OF EQUIPMENT.

ALL ARTICLES SHALL HAVE THE NAME OR TRADEMARK OF THE MANUFACTURER AND THE RATING IN VOLTS AND AMPERES OR OTHER PROPER UNITS MARKED WHERE THEY CAN BE OBSERVED READILY AFTER THE DEVICE IS INSTALLED.

PRODUCTS

GENERAL

ALL ELECTRICAL EQUIPMENT SHALL CONFORM TO NEMA STANDARDS, AND BE UL APPROVED. ALL MATERIAL AND WORKMANSHIP SHALL CONFORM TO THE LATEST REQUIREMENTS OF THE "NATIONAL ELECTRICAL SAFETY "CODE" HEREIN REFERRED TO AS THE "CODE;" THE STANDARDS OF THE ASTM; THE ANSI AND ALL LOCAL ORDINANCES WHICH MAY APPLY. DIFFERENCES IN STANDARDS OR CODE REQUIREMENTS SHALL BE RESOLVED AS DETERMINED BY THE ENGINEER.

ALL MATERIALS SHALL CONFORM TO THE REQUIREMENTS OF THE STATE OF OHIO DEPARTMENT OF PUBLIC WORKS STANDARD SPECIFICATIONS FOR HIGHWAYS AND BRIDGES, LATEST EDITION, AS APPLICABLE.

MATERIALS WILL BE SUBJECT TO INSPECTION AT ANY TIME DURING THE CONTRACT. FAILURE OF THE ENGINEER TO NOTE FAULTY MATERIAL OR WORKMANSHIP DURING CONSTRUCTION WILL NOT RELIEVE THE CONTRACTOR OF HIS RESPONSIBILITY FOR REMOVING OR REPLACING SUCH MATERIALS OR REDOING WORK WHICH MAY FAIL TO PASS ANY OF THE ELECTRICAL INSPECTOR'S INSPECTIONS OF THIS WORK.

REMOVAL OF EXISTING POWER CABLES

THE REMOVAL OF EXISTING POWER CABLES IN HURON ROAD SIDEWALK SHALL BE INCLUDED FOR PAYMENT UNDER "ITEM CA-01 POWER CABLE". THE REMOVAL OF THE EXISTING DUCTS IN THE SIDEWALK SHALL BE INCLUDED WITH THE STRUCTURAL DECK REMOVAL FOR PAYMENT. NO ADDITIONAL PAYMENT WILL BE MADE TO THE CONTRACTOR FOR WORK UNDER THIS ITEM.

ITEM 202 - REMOVAL OF EXISTING LIGHT POLES

THE CONTRACTOR SHALL CAREFULLY REMOVE THE EXISTING LIGHTING UNITS FROM THE STRUCTURE. ALL MATERIAL, INCLUDING POLES, BRACKET ARMS, LUMINAIRES, LAMPS, BASES AND OTHER SALVAGEABLE ITEMS INCLUDING CABLE SHALL BE CAREFULLY PACKED AND DELIVERED TO:

CITY OF CLEVELAND
DIVISION OF LIGHT AND POWER
2490 WEST 41ST STREET
CLEVELAND, OHIO 44113
ATTN: MR. LEO MCINTYRE (664-4200)

BASIS OF PAYMENT SHALL BE AT THE UNIT BID PRICE PER EACH, ITEM 202 - REMOVAL OF EXISTING LIGHT POLES, COMPLETE, AS SPECIFIED HEREIN AND APPROVED BY THE ENGINEER.

EUTHENICS INC.
CONSULTING ENGINEERS
CLEVELAND OHIO

REHABILITATION OF TOWER CITY BRIDGES
PROSPECT AVE., HURON ROAD,
WEST 2ND., 3RD. & 6TH. ST. VIADUCTS

GENERAL NOTES
M.E.L.P.

CLEVELAND CUYAHOGA COUNTY OHIO

Made LJD	Trcd. TJ	Ckd. LJD	Rev. RAB	Revised	
Date 10-11-82	Date 10-12-82	Date 10-13-82	Date 10-27-82	Sheet 114/170	

GENERAL NOTES

ITEM 202 - REMOVAL OF EXISTING PULL BOXES

EXISTING CONCRETE PULL BOXES IN THE SIDEWALK SHALL BE REMOVED AS PER PLAN WHERE COMPLETE REMOVAL OF STRUCTURAL SIDEWALK IS SPECIFIED, THE REMOVAL OF THE PULL BOX SHALL BE INCLUDED FOR PAYMENT UNDER STRUCTURAL SIDEWALK REMOVAL NOT UNDER PULL BOXES REMOVED. WHERE PULL BOXES ARE REMOVED AND NEW PULL BOXES NOT DESIGNATED THE EXISTING DRAIN PIPES SHALL BE PLUGGED AND NEW DUCTS SHALL BE CONNECTED THRU TO MAINTAIN THE NUMBER OF DUCTS DESIGNATED IN THE PLANS.

PAYMENT SHALL BE MADE AT THE UNIT BID PRICE PER EACH ITEM 202 REMOVAL OF EXISTING PULL BOXES, AS PER PLAN, WHICH SHALL BE FULL PAYMENT FOR ALL WORK AND MATERIALS AS SHOWN ON THE PLANS AND DESCRIBED HEREIN.

ITEM 625 - LIGHT POLES

LIGHTING PRODUCTS HEREINAFTER SPECIFIED SHALL BE A STANDARD PRODUCT OF THE MANUFACTURER, AND SHALL CONSIST OF COMPONENTS THAT WILL BE READILY AVAILABLE FOR FUTURE REPLACEMENT IF NECESSARY. ALL ELECTRICAL COMPONENTS SHALL BE LISTED BY UNDERWRITERS LABORATORIES, INC., AND ALL FINISHES SHALL CONSIST OF AN ELECTROSTATICALLY APPLIED EPOXY PRIMER AND ACRYLIC SURFACE COAT FACTORY BAKED IN THE MANUFACTURERS OWN FACILITIES. THE CONTRACTOR SHALL BE RESPONSIBLE FOR PREVENTING ANY DAMAGE TO THE FINISH OF THE LUMINAIRES.

STREET LIGHTING LUMINAIRES SHALL BE SINGLE MOUNTED CUT-OFF TYPE, MOUNTED ON 30-FOOT ROUND TAPERED ALUMINUM POLES. THE LUMINAIRE SIDEWALLS SHALL BE MITREBEND CONSTRUCTION FROM A SINGLE PIECE OF ALUMINUM EXTRUSION, ALLOY 6063-T6. CROWNED ALUMINUM SHEET CANOPY SPOT-WELDED AND SEALED TO HOUSING. FINISH ON HOUSING SHALL BE DARK BRONZE, LENS ENCASED WITH EXTENDED ALUMINUM DOOR FRAME SEALED WITH SILICONE GASKET. DOOR FRAME ASSEMBLY SHALL BE REMOVABLE. THE DOOR SHALL BE HINGED WITH STAINLESS STEEL PINS, AND RETAINED WITH QUICK RELEASE SAFETY LATCH. SEALED REFLECTOR SYSTEM SHALL PREVENT ENTRANCE OF DUST AND MOISTURE. REFLECTOR SHALL BE A PRECISION HYDRO-FORMED ALUMINUM, CHEMICALLY BRIGHTENED AND ANODIZED TO A SEMI-SPECULAR FINISH.

REFLECTOR SYSTEM SHALL BE FACTORY PRE-SET TO PROVIDE STANDARD I.E.S. DISTRIBUTION PATTERNS II AND III. AND FIELD ADJUSTABLE BY SOCKET LOCATION. REFLECTOR SYSTEM SHALL BE HINGED AND LATCHED TO THE GASKETED DOOR FRAME FOR EASY CLEANING OR REMOVAL. A FUSED DISCONNECT SHALL BE FURNISHED INSIDE THE FIXTURE SO THAT WHEN THE DOOR FRAME IS OPEN THE BALLAST PRIMARY CIRCUIT IS BROKEN. LAMP SOCKET SHALL HAVE NICKEL PLATED CURRENT-CARRYING PARTS WITH LAMP GRIP. BALLAST COMPONENTS SHALL BE MOUNTED ON A SEPARATE PANEL HAVING QUICK-RELEASE FASTENERS. BALLASTS SHALL BE CAPABLE OF STARTING HIGH PRESSURE SODIUM TYPE OF LAMP OF 250 WATTS AT 240 VOLTS AT TEMPERATURE TO 20°F. THE 200°C 600 VOLT INSULATED WIRING SHALL BE INSTALLED BETWEEN THE BALLAST COMPONENTS AND THE SOCKET. THE FLAT LENS SHALL BE THERMAL AND IMPACT TEMPERED PLATE GLASS. THE ARM ASSEMBLY SHALL BE 4-INCH RECTANGULAR ALUMINUM EXTRUSION COMPLETE WITH NON-SLIP TIE ROD CHANNELS SERVING AS A COMPRESSION MEMBER WITH TWO THREADED AND GALVANIZED STEEL TIE RODS AND LOCK NUTS IN TENSION BETWEEN POLE AND LUMINAIRE. THE LUMINAIRE(S), ARM(S) AND SLIP FITTER SHALL BE FACTORY ASSEMBLED AND SHIPPED AS ONE UNIT FOR INSTALLATION TO THE POLE AND LINE WIRING IN THE FIELD.

ROAD LUMINAIRE POLES SHALL BE 30-FOOT ROUND TAPERED ALUMINUM WITH ASSEMBLY ANCHOR BASE TYPE B. AS DETAILED ON THE PLANS. POLE SHALL BE 10 INCHES TAPERED TO 6 INCHES AT THE TOP WITH WALL THICKNESS OF 0.188 INCHES. FINISH SHALL BE BAKED ACRYLIC ENAMEL DARK BRONZE. ALL POLES SHALL BE PROVIDED WITH A STANDARD 1/2" KNOCKOUT FOR 1/2" BUSHING AS PER PLAN.

POLES SPECIFIED "WITH HAND HOLE" SHALL BE PROVIDED WITH A HAND HOLE AND COVER PLATE AS PER MANUFACTURERS RECOMMENDATIONS. ALL OTHER POLES SHALL BE PROVIDED WITHOUT HANDHOLES.

A STANDARD NEMA TWIST LOCK RECEPTACLE AND 1000 WATT 240 VOLT ELECTRICAL CELL WILL BE REQUIRED IN EACH LIGHTING FIXTURE NOT MOUNTED UNDER BRIDGES OR SIMILAR OVERHEAD OBSTRUCTION.

TWIST LOCK RECEPTACLE TO BE ADJUSTABLE FOR NORTH ORIENTATION FROM OUTSIDE OF FIXTURE AND SHALL BE WEATHERPROOF WITH PHOTO ELECTRIC CONTROL CORRECTLY IN PLACE.

1000 WATT PHOTO ELECTRICAL CELL SHALL BE FISHER PIERCE, RIPLEY CONTROL, TUNG SOL OR APPROVED EQUAL. PHOTO CELL TO OPERATE ON 240 VOLTS.

LUMINAIRES INDICATED FOR INSTALLATION ON TRAFFIC SIGNAL POLES SHALL BE SIMILAR TO THOSE MOUNTED ON THE STANDARD STREET LIGHTING POLES. THE MANUFACTURER OF THE FIXTURES SHALL BE RESPONSIBLE FOR COORDINATING THE MOUNTING AND ACCESS OF THESE LUMINAIRES TO THE TRAFFIC SIGNAL POLE. THE CONTRACTOR SHALL BE RESPONSIBLE FOR PROVIDING PROPER SHOP DRAWINGS TO EACH SUPPLIER TO INSURE COORDINATION. STREET LIGHTING LUMINAIRES AND POLES SHALL BE THE STANDARD PRODUCT OF ONE MANUFACTURER, STERNER, EXECUTIVE II.

GROUNDING

#4 AWG, OR #8 AWG AS SHOWN, BARE COPPER STRANDED GROUND CABLE SHALL BE INSTALLED THROUGHOUT THE ENTIRE LIGHTING SYSTEM, INCLUDING MAIN DUCT LINE, HANDHOLES, AND CONDUITS TO AND WITHIN THE LUMINAIRE AND POSTS. CONNECTIONS SHALL BE MADE AT EACH GROUNDING LUG ON THE LUMINAIRES AND CONDUIT BUGGINGS AT THE LUMINAIRE BASE.

THE ENTIRE ELECTRICAL SYSTEM SHALL BE SOLIDLY AND EFFECTIVELY GROUNDED IN ACCORDANCE WITH THE REQUIREMENTS OF THE NATIONAL ELECTRICAL CODE AND THE REQUIREMENTS OF THE ELECTRIC UTILITY COMPANY AND THE LOCAL AUTHORITY ENFORCING THE CODE.

THE SECONDARY GROUND SYSTEM WILL BE ESTABLISHED WITHIN THE EXISTING TRANSFORMERS. THE ELECTRICAL CONTRACTOR SHALL CONTINUE A SEPARATE INSULATED WIRE EQUIPMENT GROUND EMANATING FROM THE MANHOLE AND TRANSFORMER TO THE ENTIRE LIGHTING SYSTEM. SUCH SEPARATE GROUND SHALL BE CONTINUOUS FROM THE HANDHOLE AND/OR PULL BOX AND SUBSEQUENTLY TO EACH LUMINAIRE VIA CONTINUED SEPARATE GROUND WIRE.

GROUND WIRE SHALL BE CONTINUOUS WITHOUT SPLICE BETWEEN HANDHOLE, PULL BOX AND/OR OUTLET AND FIXTURE.

MULTIPLE LIGHTING WIRE

WIRE INSTALLATION SHALL NOT START UNTIL RACEWAYS AND BOXES HAVE BEEN CLEARED OF ALL FOREIGN MATTER AND ALL OTHER OPERATIONS OF THE WORK WHICH ARE LIKELY TO DAMAGE THE CONDUCTORS HAVE BEEN COMPLETED. THE CODE RULES SHALL BE OBSERVED REGARDING INSTALLATION OF WIRE AND CABLE. ALL WIRE SHALL BE CONTINUOUS FROM PULL BOX TO PULL BOX, OR LIGHT STANDARD TO LIGHT STANDARD. NO SPLICES WILL BE PERMITTED IN CONDUIT RUNS,OR ALONG DIRECT BURIAL RUNS.

INACTIVE WIRING TAPS IN HANDHOLES AND PULL BOXES SHALL BE CAPPED WITH WATERPROOF PLUGS FOR FUTURE ENTRY.

EACH PHASE LEG SHALL BE COLOR CODED "RED", "BLACK", AND "BLUE" WITH PVC TAPE. NEUTRAL SHALL BE WHITE.

LIGHT STANDARDS

EACH METAL LIGHT STANDARD SHALL BE SET VERTICALLY ON A FOUNDATION OR ANCHORAGE, EMPLOYING APPROVED SHIMS WHEN NECESSARY, WITHOUT A TRANSFORMER BASE, AS SHOWN ON THE PLANS. THE ANCHOR BASE SHALL BE SECURELY BOLTED TO THE ANCHORAGE BY THE EXPANDABLE ANCHOR BOLTS, AS SHOWN.

ANCHOR BOLTS SHALL BE INSTALLED AND PAID FOR UNDER ITEM SPECIAL - ANCHOR BOLTS FOR LIGHT POLE

EACH BRACKET ARM OF THE STREET LIGHTING LUMINAIRE SHALL BE MOUNTED SO THAT THE LUMINAIRE WILL BE AT THE PROPER MOUNTING HEIGHT, AS SHOWN ON THE PLANS. THE MOUNTING HEIGHT SHALL BE MEASURED FROM THE CENTER OF THE LIGHT SOURCE TO THE PAVEMENT. THE ARMS SHALL BE IN A PLANE PERPENDICULAR TO THE ROADWAY CENTERLINE.

A TEMPLATE FURNISHED BY THE LIGHT STANDARD MANUFACTURER SHALL BE USED TO POSITION THE ANCHOR BOLTS.

PHOTOELECTRIC CONTROL - PHOTOELECTRIC CONTROLS SHALL BE INSTALLED BUT NOT CONNECTED IN THIS CONTRACT.

ELECTRICAL FIELD ACCEPTANCE TEST

THE ELECTRICAL CONTRACTOR SHALL TEST ALL SYSTEMS AND EQUIPMENT FURNISHED AND/OR INSTALLED BY HIM. TESTS SHALL INCUDE OPERATION OF LIGHTING FIXTURES, CONTROLLERS, BREAKERS; CONNECTIONS AND ACCESSORIES.

ALL EQUIPMENT FOUND DEFECTIVE SHALL BE REPLACED OR REPAIRED TO SATISFACTORY OPERATING CONDITION TO THE SATISFACTION OF THE ENGINEER. THE COST OF THE TESTS SHALL BE BORNE BY THE CONTRACTOR, INCLUDING EXPENSES INCIDENT TO RETESTS OCCASIONED BY DEFECTS AND FAILURES OF EQUIPMENT OR WIRING TO MEET THE SPECIFICATIONS. M.E.L.P. SHALL SUPPLY ELECTRIC CURRENT NECESSARY FOR THE TESTS.

INSULATION RESISTANCE - ALL WIRING SHALL BE SO INSTALLED THAT, WHEN COMPLETED, THE SYSTEM WILL BE FREE FROM UNINTENTIONAL GROUNDS AND SHORTS. INSULATION SHALL BE TESTED AFTER INSTALLATION IN THE CONDUITS PRIOR TO CONNECTION TO THE DEVICES OR FIXTURES. FAILURE TO COMPLY WITH THIS REQUIREMENT MAY RESULT IN DISCONNECTING THE EQUIPMENT FOR TESTING, AND POSSIBLE REPLACEMENT OF WIRING AND EQUIPMENT.

GROUND RESISTANCE - THE ELECTRICAL CONTRACTOR SHALL TEST EACH ENTIRE GROUNDING SYSTEM FOR CONTINUITY OF CONNECTIONS AND FOR RESISTANCE TO THE FLOW OF CURRENT THROUGH THE GROUND CONECTIONS. THE GROUND RESISTANCE OF CONDUITS, EQUIPMENT CASES, CABLE SHEATH, JUNCTION BOXES AND SUPPORTING FRAMES SHALL NOT VARY APPRECIABLY FROM THAT OF THE SYSTEM AS A WHOLE. (THE GROUND RESISTANCE OF EACH SYSTEM SHALL NOT EXCEED 25 OHMS FOR MADE ELECTRODE GROUNDS SPECIFIED).

GUARANTEE

THE ELECTRICAL CONTRACTOR SHALL GUARANTEE ALL SYSTEMS AND EQUIPMENT FURNISHED AND/OR INSTALLED BY HIM FOR A PERIOD OF ONE YEAR FROM THE DATE OF ACCEPTANCE OF THE CONTRACT OR ANY PORTION THEREOF BY THE CITY.

THE ELECTRICAL CONTRACTOR SHALL MAKE GOOD, BY REPLACEMENT OR REPAIR, ALL SYSTEMS AND/OR EQUIPMENT WHICH BECOME DEFECTIVE DURING THE GUARANTEE PERIOD. ALL SUCH WORK SHALL BE STARTED WITHIN TWENTY-FOUR (24) HOURS OF NOTICE BY THE CITY.

POLE AND BRACKET WIRE

POLE AND BRACKET CABLE INSTALLED IN THE POLES AND BRACKETS SHALL BE SUPPORTED BY CABLE GRIPS ATTACHED TO "J" HOOKS AT THE TOP OF THE POLE. THE CABLE SHALL NOT DRAG AGAINST THE OPENING TO BRACKET ARM.

WIRE SHALL BE A SINGLE CONDUCTOR #12 AWG, 7 STRAND COPPER, TYPE THW, 600 VOLT -75° C (167° F) OR APPROVED EQUAL.

PAYMENT SHALL BE MADE AT THE UNIT BID PRICE PER EACH ITEM 625, AS FOLLOWS:

LIGHT POLE, SINGLE MAST, AS PER PLAN
LIGHT POLE, SINGLE MAST WITH HANDHOLE AS PER PLAN
COMBINATION SIGNAL STRAIN AND
LIGHT POLE TYPE TC-81.10 DESIGN
12, 35'-0"

WHICH SHALL BE FULL PAYMENT FOR ALL WORK AS SHOWN ON THE PLANS AND DESCRIBED HEREIN.

ITEM SPECIAL - CONCRETE PULL BOXES

CAST-IN-PLACE CONCRETE PULL BOXES WITH DRAINS, AS PER PLAN, SHALL BE INSTALLED APPROXIMATELY WHERE SHOWN ON THE DRAWINGS BY THE GENERAL CONTRACTOR.

COVERS SHALL BE OF THE DESIGN AND DETAIL SHOWN ON THE PLANS, SPECIFICATIONS OR PROPOSAL AND SHALL BE LONE STAR POLYMER "COMPOSOLITE" COVERS COMPOSED OF REINFORCED PLASTIC MORTAR AS MANUFACTURED BY POWER & COMMUNICATIONS SYSTEMS COMPANY, 615 NORTH KING ROAD, SAN JOSE, CALIFORNIA 95133 OR EQUAL. COVERS WHICH DO NOT FIT PROPERLY, ARE WARPED OR ROCK, WILL BE REJECTED BY THE ENGINEER. ANY MATERIAL REJECTED BY THE ENGINEER WILL BE REMOVED FROM THE SITE FROM THE SITE BY THE CONTRACTOR.

PULL BOXES MUST BE PROVIDED WITH A TRAP AND DRAIN AS PER PLANS. THE EXISTING TRAP AND DRAIN MAY BE REUSED IF ACCEPTABLE TO THE ENGINEER. A 5 FOOT LENGTH OF 3" Ø PIPE TO INCLUDE SPECIALS HAS BEEN INCLUDED IN THE QUANTITIES UNDER BID ITEM NO. 518 - PIPE REPLACEMENT TO AID THE CONTRACTOR IN BIDDING THE WORK. PAINTING OF EXISTING PIPE AS DIRECTED BY THE ENGINEER IS INCLUDED UNDER BID ITEM SPECIAL - CLEANING, REPAIR AND PAINTING OF EXISTING DRAINAGE SYSTEM.

PAYMENT SHALL BE MADE AT THE UNIT BID PRICE PER EACH, ITEM SPECIAL - CONCRETE PULL BOXES, AS PER PLAN, WHICH SHALL BE FULL PAYMENT FOR ALL MATERIALS TOOLS AND LABOR REQUIRED TO COMPLETE THE WORK AS DESCRIBED HEREIN.

ITEM SPECIAL - ANCHOR BOLTS FOR LIGHT POLE

ANCHOR BOLTS FOR MOUNTING LIGHT POLES ON BRIDGES SHALL CONFORM TO THE REQUIREMENTS OF 713.01 AND DETAILS SHOWN ON THE PLANS AND STANDARD DRAWINGS OR APPROVED SHOP DRAWINGS FOR THE RESPECTIVE POLES TO BE PLACED THEREON.

PAYMENT SHALL BE MADE AT THE UNIT PRICE BID FOR EACH SET OF THE SIZE REQUIRED TO INSTALL ONE POLE UNDER ITEM SPECIAL - ANCHOR BOLTS FOR LIGHT POLE. THIS PAYMENT SHALL CONSTITUTE FULL COMPENSATION FOR FURNISHING AND PLACING THE BOLTS.

ITEM CA.01 - POWER CABLE (HURON ROAD)
WORK INCLUDED

THE CONTRACTOR SHALL FURNISH ALL NECESSARY LABOR, MATERIALS, TOOLS AND EQUIPMENT FOR INSTALLING AND SPLICING ALL POWER CABLES, COMPLETE, INCLUDING PACKING, BONDING, FIREPROOFING AND OTHER APPURTENANT WORK, ALL AS SPECIFIED, REQUIRED OR SHOWN ON THE CONTRACT DRAWINGS.

CONDUCTOR

CONDUCTORS SHALL BE SOFT OR ANNEALED COPPER WIRE IN ACCORDANCE WITH THE LATEST REVISIONS OF ASTM-B-3-54T. CONDUCTOR SHALL BE #4/0, 19 STRANDS-ROUND, RESISTANCE TO BE 0.051 OHMS PER 1,000 FEET AT 25°C.

THE CROSS-SECTIONAL AREA OF THE CONDUCTOR SHALL NOT BE LESS THAN 98% OF THE AVERAGE AS LISTED AT ANY PART OF THE CONDUCTOR. CONDUCTOR RESISTANCE IN ANY GIVEN 1,000 FEET OF CONDUCTOR SHALL NOT BE MORE THAN 2% GREATER THAN AVERAGE VALUE LISTED.

CABLES

THE CABLE SHALL BE 3/C, #4/0 STRANDED XLP, WITH WIRE STRANDED SHIELD, RATED 15KV UNDERGROUND NEUTRAL SERVICE WITH A 90°C., COPPER TEMPERATURE RISE. A SEMI-CONDUCTING EXTRUDED STRAND SHIELD SHALL BE APPLIED IMMEDIATELY OVER EACH BARE CONDUCTOR. THE 3/C CABLE SHALL BE WITHOUT GROUND WIRES IN THE INTERSTICES.

THE INSULATION SHALL BE NON-CARBON FILLED CHEMICALLY CROSS-LINKED THERMOSETTING POLYETHYLENE, NOT LESS THAN 215 MILS THICK. THE 3/C CABLE SHALL HAVE A COLOR CODED INSULATING TAPE APPLIED OVER THE INDIVIDUAL CONDUCTORS WHICH ARE THEN ASSEMBLED WITH FILLERS AND BINDER TAPE OVERALL.

THE OVERALL JACKET SHALL BE POLYVINYLCHLORIDE COMPOUND, NOT LESS THAN 110 MILS THICK. A PERMANENT MARKER TAPE INDICATING THE YEAR OF MANUFACTURE AND SEQUENTIAL FOOTAGE NUMBER REPEATED EACH FOOT, SHALL BE INSERTED UNDER THE COPPER WIRE SHIELD OR OUTER JACKET. THE JACKET SURFACE SHALL BE PRINTED WITH THE MANUFACTURERS NAME, CABLE TYPE, VOLTAGE RATING AND THE CONDUCTOR SIZE.

TEMPORARY CABLE

TEMPORARY CABLE IN HURON ROAD SHALL BE THE SAME AS THE PROPOSED POWER CABLES AS SPECIFIED ABOVE. IF POLE SUPPORTED THEY SHALL BE 336.4 MCM ACSR 27/7 STRANDING.

CABLE TESTS

ELECTRICAL, THERMAL, PHYSICAL AND MOISTURE RESISTANCE TESTS OF ALL CABLES IN THIS SPECIFICATION SHALL CONFORM TO THE LATEST SPECIFICATION OF THE IPCEA S-66-524. CERTIFIED COPIES OF THESE TESTS RESULTS SHALL BE SENT TO:

MR. ROBERT J. ALBACH
ELECTRICAL ENGINEER
1201 LAKESIDE AVENUE
CLEVELAND, OHIO 44114

GUARANTEE

THE BIDDER SHALL GUARANTEE THAT THE CABLE FURNISHED UNDER THE TERMS OF THIS SPECIFICATION SHALL BE FREE FROM INHERENT DEFECTS IN DESIGN, WORKMANSHIP AND MATERIAL FOR A PERIOD OF ONE YEAR AFTER DELIVERY AND SHALL CORRECT BY MEANS OF IMPROVED DESIGN, MATERIAL OR WORKMANSHIP, FREE OF EXPENSE TO THE CITY, ALL DEFECTS THAT DEVELOP WITHIN SAID GUARANTEE.

CABLE PULLING

BEFORE STARTING CABLE INSTALLATION, THE DUCTS TO BE OCCUPIED SHOULD BE SELECTED THROUGHOUT THE ENTIRE LENGTH OF THE RUN AND THE DUCTS SELECTED MUST BE CHECKED TO SEE THAT THEY ARE CLEAN AND FREE FROM ALL OBSTRUCTIONS.

IF REELS ARE TO BE LEFT IN THE STREET, WARNING LIGHTS SHALL BE PLACED AROUND THEM.

LUBRICANT (GREASE OR SOAPSTONE OR A COMBINATION OF THESE TWO INGREDIENTS) SHALL BE APPLIED TO THE CABLE JUST BEFORE IT ENTERS THE FEEDING TUBE. A COATING ABOUT 1/16" THICK IS ADEQUATE. NO LUBRICANT SHALL BE APPLIED TO THE FIRST AND LAST 5' OF CABLE SO A CLEAN SPLICE CAN BE MADE.

THE REEL OF CABLE MUST BE PROPERLY PLACED AT THE FEEDING END TO CAUSE MINIMUM FLEXING OF THE CABLE, IT SHOULD ALWAYS BE LOCATED ON THE SIDE OF THE MANHOLE WHICH THE CABLE IS PULLED.

A MAN STATIONED AT THE REEL AT THE FEEDING END SHALL REGULATE THE AMOUNT OF SLACK IN THE CABLE SO THAT IT PASSES FREELY INTO THE FEEDING TUBE WITHOUT BEING LOOSE ON THE REEL AND WITHOUT SCRAPPING THE MANHOLE FRAME.

THE CABLE SHALL BE DRAWN INTO THE DUCT JUST FAST ENOUGH TO KEEP THE CABLE AND REEL MOVING SMOOTHLY AND SO IT CAN BE PROPERLY INSPECTED AND LUBRICATED. PULLING TENSION SHALL NOT EXCEED MANUFACTURER'S RECOMMENDATIONS.

WHEN THE CABLE IS CUT, UNLESS SPLICING IS TO BE DONE IMMEDIATELY, THE ENDS SHALL BE PROPERLY SEALED BY AN APPROVED METHOD.

THE CABLE SHALL BE PLACED IN THE MANHOLES ON THE CABLE RACKS WITHOUT TRYING TO TRAIN IT INTO ITS FINAL POSITION AND SHALL BE TIED TO THE SUPPORTS TO PREVENT IT FROM FALLING. THE ENDS SHALL BE TRAINED AS HIGH AS POSSIBLE TO KEEP THEM OUT OF ANY WATER.

SPLICING OF CABLES SHALL BE DONE IN AN APPROVED MANNER USING APPROVED SPLICING KITS AND ACCORDING TO THE SPLICING KIT MANUFACTURER'S INSTRUCTION.

EUTHENICS INC.
CONSULTING ENGINEERS
CLEVELAND OHIO

REHABILITATION OF TOWER CITY BRIDGES
PROSPECT AVE., HURON ROAD,
WEST 2ND., 3RD. & 6TH. ST. VIADUCTS

GENERAL NOTES
M.E.L.P.

CLEVELAND CUYAHOGA COUNTY OHIO

Made LJD	Trcd. TJ	Ckd. LJD	Rev. RAB	Revised
Date 10-11-82	Date 10-12-82	Date 10-13-82	Date 10-27-82	Sheet 115/170

GENERAL NOTES

MEASUREMENT

THE NUMBER OF LINEAR FEET OF CABLE TO BE PAID FOR SHALL BE THE DISTANCE FROM CENTER OF MANHOLE TO CENTER OF MANHOLE PLUS 9'-0" AT ENDS IN MANHOLES.

PAYMENT

THE FOOTAGE MEASURED SHALL BE PAID FOR AT THE CONTRACT BID PRICE PER LINEAR FOOT FOR "ITEM CA.01 - POWER CABLE CLASSIFIED AS TO SIZE AND TYPE WHICH PRICE SHALL CONSTITUTE FULL COMPENSATION FOR FURNISHING CABLE, SPLICING KITS, LUBRICANT AND FOR PULLING, TRAINING, SPLICING, RACKING, BONDING AND INSTALLING OF CABLES AND FOR ALL LABOR, EQUIPMENT, TOOS AND INCIDENTALS NECESSARY TO COMPLETE THIS ITEM.

POWER CABLE 3/C, 15KV, #4/0 X LP

POWER CABLE (TEMPORARY) SINGLE CONDUCTOR, 15KV, #4/0

DUCTS - UNDERGROUND CONSTRUCTION

ITEM UC.01 - CONCRETE ENCASED PVC DUCT

PVC DUCT (CONCRETE ENCASED) PVC: THE CONTRACTOR SHALL FURNISH AND INSTALL 2",3½" & 4" I.D. PVC DUCT AS CALLED FOR ON THE CONTRACT DRAWINGS AND IN ACCORDANCE WITH THE DETAILS AND SPECIFICATIONS.

FITTINGS, COUPLINGS, ADAPTERS, END BELLS AND SWEEPS SHALL CONFORM TO ASTM D-1785 AND SHALL BE ALL OF THE SAME MATERIAL AS THE DUCT.

PVC DUCT SCHEDULE 40 FOR ELECTRICAL PURPOSES SHALL CONFORM TO ASTM D-1784 & 1785 AND SHALL BE THE SIZES AS CALLED FOR. PVC SOLVENT CEMENT SHALL CONFORM TO ASTM D-2564.

SPACERS MAY BE OF EITHER FIBRE OR PLASTIC.

DUCT INSTALLATIONS - ELECTRICAL CONTRACTOR SHALL EXCAVATE AND INSTALL DUCT TO THE LINES INDICATED ON PLANS. THE MINIMUM DEPTH SHALL BE 18" BELOW FINISHED GRADE, 3' TO 4' UNDER TREES AND DRIVEWAYS.

CONCRETE SHALL BE CLASS "C" AND CONSIST OF THE FOLLOWING MIX PER CUBIC YARD:

6.5 BAGS OF PORTLAND CEMENT...WT/BAG 95#	617.5#
½"-3/4 COARSE AGGREGATE (SLAG ½" TO 3/4") 235# PER BAG OF CEMENT	1527.5#
WASHED SHARP SAND...195# PER BAG CEMENT	1267.5#
WATER 5.75 GAL. @ 8.4# PER GALLON	54.6#
	3467.1#/CU. YD.

OR APPROVED EQUAL.

THE WORK SHALL INCLUDE CLASS "C" CONCRETE REQUIRED TO MAKE REPAIRS TO ALL SIDEWALKS, STREETS AND CURBS WHICH ARE DISTURBED DURING THE EXECUTION OF THIS CONTRACT AS SHOWN ON THE CONTRACT DRAWINGS AND IN ACCORDANCE WITH THE SPECIFICATIONS.

CONDUIT SHALL BE INSTALLED BY BUILT UP METHODS, SPACERS SHALL BE PLACED AT NOT GREATER THAN 3' INTERVALS TO HOLD DUCTS IN CONFIGURATION DESIRED WITH DUCT BANK BRACED SECURELY TO KEEP FROM SHIFTING AND FLOATING WHILE CONCRETE IS POURED. EACH SECTION OF DUCT AND ITS FITTING SHALL BE TAPPED SECURELY INTO PLACE IN THE PREVIOUS SECTION AND SHALL BE LEAK PROOF.

CONCRETE SHALL BE WORKED INTO ALL SPACES BETWEEN DUCTS SO THAT THE CONDUIT BANK IS EFFECTIVELY ENCASED IN CONCRETE AS SHOWN ON THE DETAIL DRAWINGS.

ALL FOREIGN MATTER OR DIRT SHALL BE REMOVED FROM THE INSIDE OF THE CONDUIT BEFORE IT IS ACCEPTED BY THE DIRECTOR. THIS WILL BE DONE BY THE CONTRACTOR BY PULLING A MANDREL THROUGH EACH DUCT OF THE CONDUIT BANK REMOVING ALL SOLID OBSTRUCTIONS FOLLOWED BY A CIRCULAR WIRE BRUSH TO REMOVE ANY DIRT, SAND OR CONCRETE WHICH MAY HAVE BEEN INTRODUCED DURING CONSTRUCTION LEAVING A CLEAN CONDUIT FREE FROM OBSTRUCTIONS OF FOREIGN MATTER.

NO DUCT WORK WILL BE ACCEPTED WHICH HAS SHARP EDGES OR CRACKED IN ANY WAY AND THE CONTRACTOR SHALL REPLACE SAID DUCT AT HIS OWN EXPENSE.

NO SHARP VARIATIONS WILL BE PERMITTED IN TRENCH BOTTOM. IN GENERAL, DUCT LINES SHALL FOLLOW THE FINISHED GRADES OF SURFACES UNDER WHICH THEY ARE INSTALLED.

BACKFILL - UPON COMPLETION AND ACCEPTANCE OF THE INSTALLATION OF DUCT, THE BACKFILL SHALL BE MADE WITH SAND OR CLEAN EXCAVATED MATERIAL WHEN APPROVED, COMPACTED WITH PNEUMATIC TAMPERS IN 6" LAYERS TO SUBGRADE OF AREA. REMOVE SURPLUS EXCAVATION FROM THE SITE.

THE INSTALLATION SHALL INCLUDE EXCAVATION, SHORING, BRACING, CLASS "C" CONCRETE, FITTINGS, ELBOWS,ALL DUCTS AND BACK-FILLING INSTALLED COMPLETE IN ACCORDANCE WITH THE SPECIFICATIONS AND CONTRACT DRAWINGS.

MEASUREMENT

THE NUMBER OF LINEAR FEET OF CONDUIT BANK TO BE PAID FOR SHALL BE THE ACTUAL NUMBER OF LINEAR FEET FURNISHED AND PLACED AND CLEANED AS MEASURED ALONG THE AXIS OF THE CONDUIT LINE INCLUDING FITTINGS.

PAYMENT

THE FOOTAGE SHALL BE PAID FOR AT THE CONTRACT PRICE BID PER LINEAR FOOT UNDER ITEM SPECIAL - CONCRETE ENCASED 3½"Ø PVC CONDUIT BANK. ITEM SPECIAL - CONCRETE ENCASED 2"Ø LIGHTING CONDUIT & ITEM SPECIAL - CONCRETE ENCASED 4"Ø PVC CONDUIT BANK.

DUCTS - BRIDGE CONSTRUCTION

ITEM BR.01 - POWER DUCTS

POWER DUCTS TO BE INSTALLED IN THE NORTH SIDEWALK OF HURON ROAD SHALL BE 4" I.D. PVC OR FIBRE UTILITY CONDUIT USED IN CONCRETE ENCASEMENT. THE NEW CONDUIT SHALL BE JOINED TO THE EXISTING CONDUIT BY A SLEEVE AS PER MANUFACTURERS RECOMMENDATIONS AS APPROVED BY THE ENGINEER.

DUCT EXPANSION JOINTS AS APPROVED BY THE ENGINEER SHALL BE PLACED AT EACH EXPANSION JOINT IN THE BRIDGE STRUCTURE.

ITEM BR. 02 - LIGHTING DUCTS

LIGHTING DUCTS SHALL BE 3½" I.D. PVC UTILITY CONDUIT USED IN CONCRETE ENCASEMENT. THE NEW CONDUIT SHALL BE JOINED TO THE EXISTING CONDUIT BY A SLEEVE AS PER MANUFACTURERS RECOMMENDATIONS AS APPROVED BY THE ENGINEER.

DUCT EXPANSION JOINTS AS APPROVED BY THE ENGINEER SHALL BE PLACED AT EACH EXPANSION JOINT IN THE BRIDGE STRUCTURE.

MEASUREMENT

THE NUMBER OF LINEAR FEET OF DUCT TO BE PAID FOR SHALL BE THE ACTUAL NUMBER OF LINEAR FEET FURNISHED AND PLACED AS MEASURED ALONG THE DUCT CENTERLINE INCLUDING FITTINGS AND EXPANSION JOINTS.

PAYMENT

DUCT SHALL BE PAID FOR AT THE CONTRACT PRICE BID PER LINEAR FOOT FOR ITEM BR. 01 - POWER DUCTS 4"Ø PVC AND ITEM BR. 02 - LIGHTING DUCT 3½"Ø PVC WHICH PRICE AND PAYMENT SHALL CONSTITUTE FULL COMPENSATION FOR FURNISHING, HAULING AND PLACING THE DUCT, FITTINGS, EXPANSION JOINTS AND FOR ALL LABOR, EQUIPMENT, TOOS AND INCIDENTALS NECESSARY TO COMPLETE THIS ITEM.

ITEM 625 - LIGHT CONDUIT AND JUNCTION BOX

ALL CONDUIT SHALL CONFORM TO 713.04. EXPANSION FITTINGS FOR CONDUIT SHALL BE OZ TYPE AX CROUSE-HINDS TYPE XJ-4, APPLETON XJ-4 OR EQUAL APPROVED BY THE ENGINEER AND ARE INCLUDED IN THE BID PRICE FOR THE CONDUIT. EACH EXPANSION FITTING SHALL HAVE A COPPER EXTERNAL BONDING JUMPER.

THE CONDUIT SHALL BE INSTALLED AS PER PLAN AND AS PER STANDARD CONSTRUCTION DRAWING HL-4.

THE JUNCTION BOXES SHALL BE IN ACCORDANCE WITH 713.10, EXCEPT THAT BASE MATERIAL COMPOSITION OF GALVANIZED STEEL PLATE COVERS SHALL CONFORM TO ASTM A-242 OR A-36.

MEASUREMENT

THE NUMBER OF LINEAR FEET OF CONDUIT TO BE PAID SHALL BE THE ACTUAL NUMBER OF LINEAR FEET FURNISHED AND PLACED AND CLEANED AS MEASURED ALONG THE AXIS OF THE CONDUIT LINE INCLUDING FITTINGS. THE NUMBER OF JUNCTION BOXES TO BE PAID FOR SHALL BE THE ACTUAL NUMBER INSTALLED AND ACCEPTED.

PAYMENT

THE FOOTAGE MEASURED AS PROVIDED SHALL BE PAID FOR AT THE CONTRACT PRICE BID PER LINEAR FOOR UNDER ITEM 625 - LIGHTING CONDUIT, 2"Ø, 713.04.

THE NUMBER OF JUNCTION BOXES SHALL BE PAID FOR AT THE CONTRACT PRICE BID PER EACH UNDER ITEM 625 - LIGHTING JUNCTION BOX .

ITEM 625 - CABLE AND WIRE

ALL CABLE OR WIRE SHALL CONFORM TO AND MEET ALL THE CURRENT REQUIREMENTS OF THE UNDERWRITERS' LABORATORIES, INC., THE NATIONAL ELECTRICAL MANUFACTURER'S ASSOCIATION, ANSI, IPCEA AND THE NATIONAL ELECTRICAL CODE, WHEREVER SUCH STANDARDS SHALL APPLY. THE FOLLOWING ASTM AND ANSI STANDARDS SHALL APPLY, AS APPLICABLE:

A. ASTM-B-8 COPPER CONDUCTOR.
B. ANSI DESIGNATION C7.8 FOR COPPER CONDUCTOR.
C. ASTM-D-734 WITH REGARD TO DEFORMATION, ETC.
D. ASTM-D-543 CHEMICAL RESISTANCE TO CONTAMINANTS, OIL, ETC.

ALL STREET LIGHTING DISTRIBUTION CABLES SHALL CONSIST OF COPPER CONDUCTORS WITH A SINGLE JACKET OF FILLED, CHEMICALLY CROSS-LINKED POLYETHYLENE, U.L. APPROVED RDD-RHW-USE RATE 90 DEGREES C DRY, 75 DEGREES C WET. MAIN LINE STREET LIGHTING CONDUCTORS SHALL BE SINGLE CONDUCTOR, RATED 600 VOLTS, #4 AWG, STRANDED. TECHNICAL SPECIFICATIONS AS FOLLOWS:

A. DIMENSIONS: #4 AWG CONDUCTOR.
B. TYPE OF CONDUCTOR: CLASS B CONCENTRIC LAY BARE SOFT DRAWN COPPER STRANDED.
C. NUMBER OF STRANDS: SEVEN (7).
D. TYPE OF INSULATION: FILLED, CHEMICALLY CROSS-LINKED POLYETHYLENE.
E. VOLTAGE RATING: 600 VOLTS A.C.
F. USE: WET OR DRY CONDITIONS IN METAL OR PLASTIC CONDUIT-DIRECT BURIAL.
G. TEMPERATURE RATING, NORMAL CONDITIONS: 90°C DRY - 75°C WET.
H. TEMPERATURE RATING, EMERGENCY CONDITIONS: 130°C - 100 HOURS/YEAR.
I. TEMPERATURE RATING SHORT CIRCUIT: 250°C.
J. INSTALLATION TEMPERATURE RANGE: -30°F TO 120°F.
K. OUTSIDE DIAMETER: .43 INCHES.
L. WALL THICKNESS OF JACKET: .062 INCHES.
M. UNDERWRITERS' RATING: TYPE USE OR RHH-RHW.
N. IDENTIFICATION OF CONDUCTORS: SURFACE PRINTED MANUFACTURER'S NAME AND U.S. DESIGNATION, SIZE AND VOLTAGE.

POLE AND BRACKET STREET LIGHTING CONDUCTORS FROM HANDHOLES TO LUMINAIRES SHALL MEET ALL PRECEDING WIRE AND CABLE SPECIFICATIONS, EXCEPT AS FOLLOWS:

A. DIMENSIONS: #12 AWG CONDUCTOR.
B. TYPE OF CONDUCTOR: CLASS B CONCENTRIC LAY BARE SOFT DRAWN COPPER STRANDED.
C. NUMBER OF STRANDS: SEVEN (7).
D. TYPE OF INSULATION: FILLED, CHEMICALLY CROSS-LINKED POLYETHYLENE.
E. VOLTAGE RATING: 600 VOLTS A.C.
F. USE: WET OR DRY CONDITIONS IN METAL OR PLASTIC CONDUIT-DIRECT BURIAL.
G. TEMPERATURE RATING, NORMAL CONDITIONS: 90°C DRY - 75°C WET.
H. TEMPERATURE RATING, EMERGENCY CONDITIONS: 130°C - 100 HOURS/YEAR.
I. TEMPERATURE RATING, SHORT CIRCUIT: 250°C.
J. INSTALLATION TEMPERATURE RANGE: -30°F TO 120°F.
K. OUTSIDE DIAMETER: .21 INCHES.
L. WALL THICKNESS OF JACKET: .045 INCHES.
M. UNDERWRITERS' RATING: TYPE USE OR RHH-RHW.

WIRE AND CABLE TERMINATORS AND CONNECTORS

THE STREET LIGHT CONNECTORS DESCRIBED IN THE SPECIFICATIONS AND SKETCHES SHOW DETAILS OF A CONNECTOR WHICH IS FELT WILL BE SUITABLE FOR A RANGE OF CONDUCTORS.

THE STREET LIGHT CONNECTOR, BOTH FUSED AND UNFUSED, IS INTENDED FOR USE IN INSTALLING A STREET LIGHTING SYSTEM. IT MUST BE OF A TYPE APPROVED FOR THAT USE.

ALL CONNECTORS SHALL BE CAPABLE OF PROPER OPERATION ON CIRCUITS UP TO 600 VOLTS, A.C. FUSIBLE CONNECTORS SHALL BE CAPABLE OF HANDLING UP TO AND INCLUDING 30 AMPS.

THE COMPLETE CONNECTOR SHALL CONFORM TO AND MEET ALL THE CURRENT REQUIREMENTS OF THE UNDERWRITERS' LABORATORIES, INC.,; THE NATIONAL ELECTRICAL MANUFACTURERS' ASSOCIATION AND THE NATIONAL ELECTRICAL CODE, WHEREVER SUCH STANDARDS SHALL APPLY.

EACH CONNECTOR USED FOR A SINGLE CONDUCTOR IN THE LINE SIDE AND LOAD SIDE SECTIONS SHALL BE COMPLETE WITH NATURAL OR SYNTHETIC RUBBER INSULATING BOOTS WITH DEFINED GRADATIONS TO ALLOW THE BOOT TO BE CUT AND USED FOR VARIOUS OUTSIDE DIAMETERS OF CABLES.

INSULATING BOOTS SHALL BE USED ON ALL CONNECTORS, AND BE DESIGNED TO SEAL TIGHTLY OVER THE INSULATING JACKET OF THE WIRE WHEN PROPERLY INSTALLED AND TO SEAL OUT WATER, VAPOR AND CONTAMINANTS OR FOREIGN MATTER FROM CONTACT WITH THE METALLIC TERMINAL. THE INSIDE SURFACE OF THE BOOTS SHALL BE TREATED WITH SILICONE OR OTHER MATERIAL TO ASSURE EASE OF INSTALLATION WHEN DRAWING THE BOOT OVER THE JACKET OF THE CONDUCTOR.

ALL CONNECTOR KITS SHALL BE COMPLETE WITH ASSEMBLY INSTRUCTIONS AND SHALL BE COMPLETE WITH LUBRICATING COMPOUND FOR PROPER ASSEMBLY OF THE CONNECTOR.

QUICK DISCONNECT "T" TAP SHALL BE INSTALLED IN EACH CONNECTOR IN EACH PULL BOX. TAP SHALL BE OF THE LATEST DESIGN, AS HEREINAFTER SPECIFIED. PROVIDE REMOVABLE INSULATED CAP ON TAP.

CONNECTORS WHICH MEET THE PRECEDING SPECIFICATIONS INCLUDE, BUT ARE NOT LIMITED TO, THE FOLLOWING: WATERPROOF "TRON" FUSE HOLDERS, STYLE HEJ-AQ-RYC WITH BAF-FUSES, IF REQUIRED, AND INSULATING BOOTS' ELASTIMOLD DIVISION OF AMERACE "ESNA" CORPORATION CONNECTORS STYLE 20 & 35 OR 82S AS APPLICABLE, OR BURNDY. ALL CONNECTORS AND THEIR APPLICATION SHALL BE SUBMITTED FOR APPROVAL. DETAILS AND INTENDED APPLICATIONS AS PER MANUFACTURER. POTTED TYPE CONNECTORS SHALL NOT BE ACCEPTED.

PRIMARY FUSE CUTOUTS

PRIMARY FUSE CUTOUTS SHALL CONFORM TO THE REQUIREMENTS OF THE N.E.M.A. STANDARD 28-53. CUTOUTS RATED AT 2.6KV VOLTS SHALL BE WET-PROCESS PORCELAIN ENCLOSED. THE INTERRUPTING CAPACITY OF PRIMARY FUSE CUTOUTS SHALL BE NOT LESS THAN 14,000 RMS AMPERES AT RATED VOLTAGE. FUSE LINKS SHALL HAVE A CURRENT RATING EQUAL TO 150 PERCENT OF THE TRANSFORMER FULL LOAD RATING OR THE NEXT LARGER STANDARD SIZE. WESTINGHOUSE SERIES "EUH" DROPOUT TYPE, FUSIBLE AND NON-FUSIBLE, 50 AMP MINIMUM.

MEASUREMENT

THE NUMBER OF LINEAR FEET FURNISHED AND INSTALLED SHALL BE MEASURED AS PER ITEM 625.24.

PAYMENT

THE ACCEPTED QUANTITIES OF SPECIFIC ITEMS OF CABLE SHALL BE PAID FOR AT THE CONTRACT PRICE BID PER LINEAR FOOT UNDER:

ITEM 625 - NO. 4 AWG 600 VOLT DISTRIBUTION CABLE
ITEM 625 - NO. 12 AWG POLE AND BRACKET CABLE

SIGNAL STRAIN POLE

THE SIGNAL STRAIN POLE ON THE SOUTHEAST CORNER OF SUPERIOR AND PROSPECT SHALL BE LEFT IN PLACE UNTIL A NEW POLE IS SET AS PER PLANS.

THE CONTRACTOR WILL SET THE NEW POLE FOUNDATION WITH ANCHOR BOLTS AND ANY NECESSARY DUCT AS SPECIFIED BY THE CITY OF CLEVELAND, DIVISION OF TRAFFIC ENGINEERING AND PARKING. THE CONTRACTOR WILL MEET ON SITE WITH A REPRESENTATIVE FROM THE TRAFFIC SIGNAL UNIT PRIOR TO FINAL POLE BASE LOCATION AND AGAIN PRIOR TO POURING CONCRETE FOR FINAL INSPECTION OF FOUNDATION FORMS AND ANCHOR BOLTS ORIENTATION. THE DIVISION OF TRAFFIC ENGINEERING WILL SUPPLY THE ANCHOR BOLTS READY FOR INSTALLATION TO THE CONTRACTOR. TRAFFIC ENGINEERING WILL SET THE POLE AND DO ALL THE NECESSARY HOOK-UP IN ORDER TO TRANSFER THE NEW POLE AND REMOVE THE EXISTING POLE.

THE POLE, 12" X 7.52" x 32', SHALL BE A TAPERED STEEL SHAFT HAVING A CAST STEEL BASE, HANDHOLE AND POLE TOP.

THE SHAFT SHALL BE MADE OF ONE LENGTH OF STEEL MINIMUM #3 MANUFACTURERS STANDARD GAUGE WITH A 4" x 8" HANDHOLE REINFORCING FRAME, COMPLETE WITH A COVER A SHORT DISTANCE ABOVE THE BASE. THE HANDHOLE FRAME SHALL BE TAPPED 1/2"-13 UNC FOR GROUNDING PURPOSES. THE SHAFT SHALL BE FURNISHED WITH A WIRE INLET COMPLETE WITH GROMMET.

THE BASE SHALL BE A ONE PIECE CAST STEEL BASE ASTM A27 GRADE 65 35 SECURED TO THE LOWER END OF THE SHAFT BY TWO CONTINUOUS ELECTRIC ARC WELDS. FOUR REMOVABLE COVERS SHALL BE PROVIDED WITH THE BASE FOR ATTACHMENT TO THE BASE BY HEX CAP SCREWS.

ALL MATERIAL SHALL BE SHOP-COATED WITH A RUST RESISTANT PAINT.

PAYMENT SHALL BE MADE AT THE UNIT BID PRICE PER EACH, ITEM 632 - SIGNAL STRAIN POLE.

FHWA REGION	STATE	PROJECT	
5	OHIO	M-ID 99 (9)	

117/170

CUYAHOGA COUNTY
HURON / PROSPECT BRIDGE

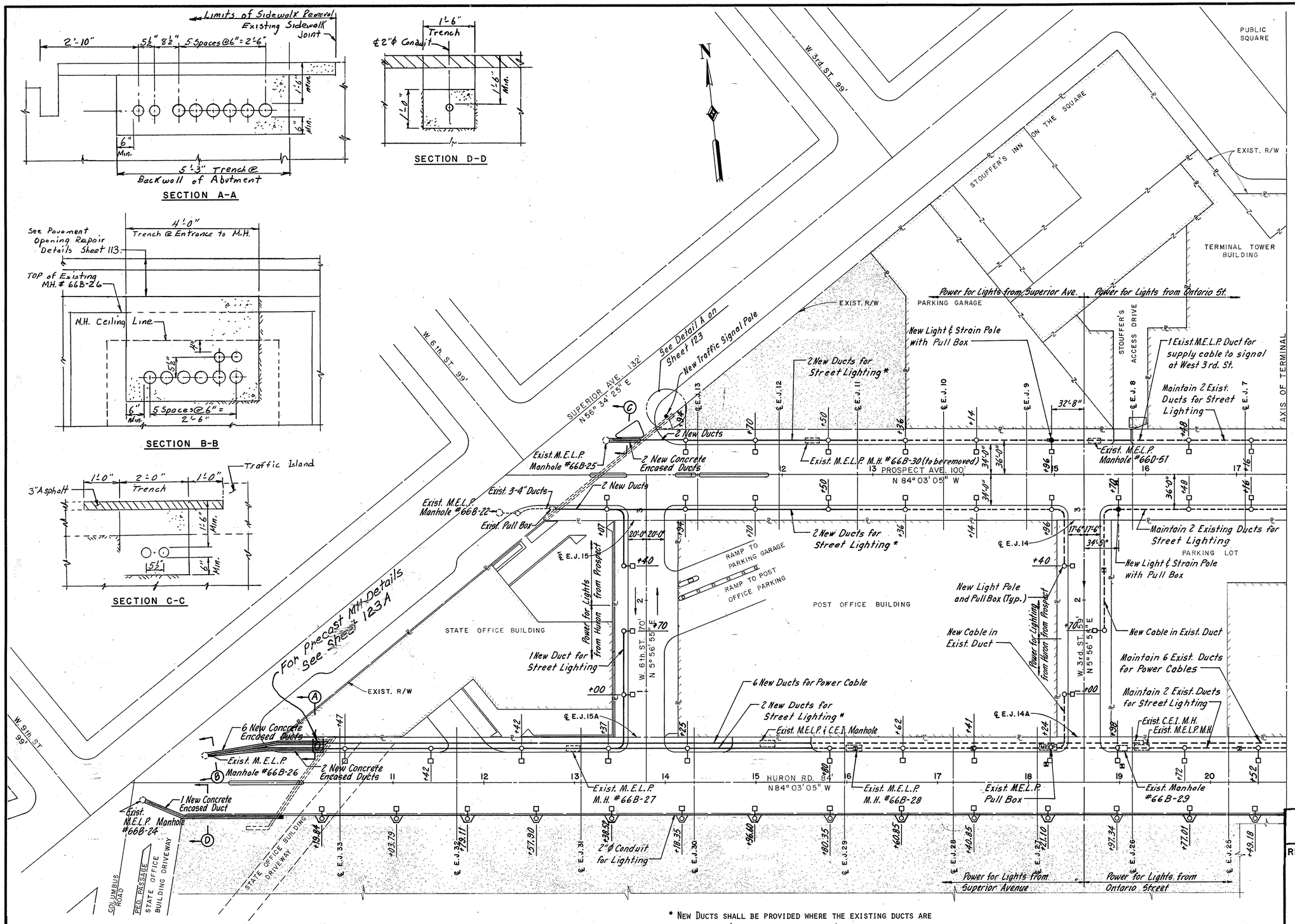

* NEW DUCTS SHALL BE PROVIDED WHERE THE EXISTING DUCTS ARE DAMAGED AND/OR REMOVED WITH THE SIDEWALK STRUCTURAL DECK REPLACEMENT.

LEGEND

- New Light Pole and Pull Box
- New Light Pole and Strain Pole with Pull Box
- New Light Pole and Strain Pole with Signal Control Box and Pull Box
- New Light Pole with Pull Box and Flood Light
- Existing Manhole Chamber with Transformer under Deck
- Existing Manhole Chamber under Deck
- New Pull Box
- Existing M.E.L.P. Manhole
- Existing Cable Ducts
- Existing M.E.L.P. Pull Box
- New Cable Ducts

NOTES:

PROPOSED LIGHT & PULL BOXES ARE TO BE LOCATED IN EXISTING LIGHT AND PULL BOX LOCATIONS.

NEW LIGHTING CABLE TO BE PULLED INTO ONE OF THE *TWO* EXISTING M.E.L.P. DUCTS. SIGNAL PHASING WILL BE PROVIDED BY THE CITY OF CLEVELAND TRAFFIC DEPARTMENT.

EUTHENICS INC.
CONSULTING ENGINEERS
CLEVELAND OHIO

REHABILITATION OF TOWER CITY BRIDGES
PORTIONS OF PROSPECT AVE., HURON RD., WEST 2nd. & 3rd. ST. VIADUCTS

M.E.L.P. UTILITY PLANS

CLEVELAND CUYAHOGA COUNTY OHIO

Made JSC	Trcd. JSC	Ckd. LJD	Rev. RAB	Scale: As Noted
Date 9-10-82	Date 9-17-82	Date 10-21-82	Date 10-22-82	Sheet 117/170

Revised 8-6-84

FHWA REGION	STATE	PROJECT	
5	OHIO	M-ID 99 (9)	

118/170

CUYAHOGA COUNTY
HURON / PROSPECT BRIDGE

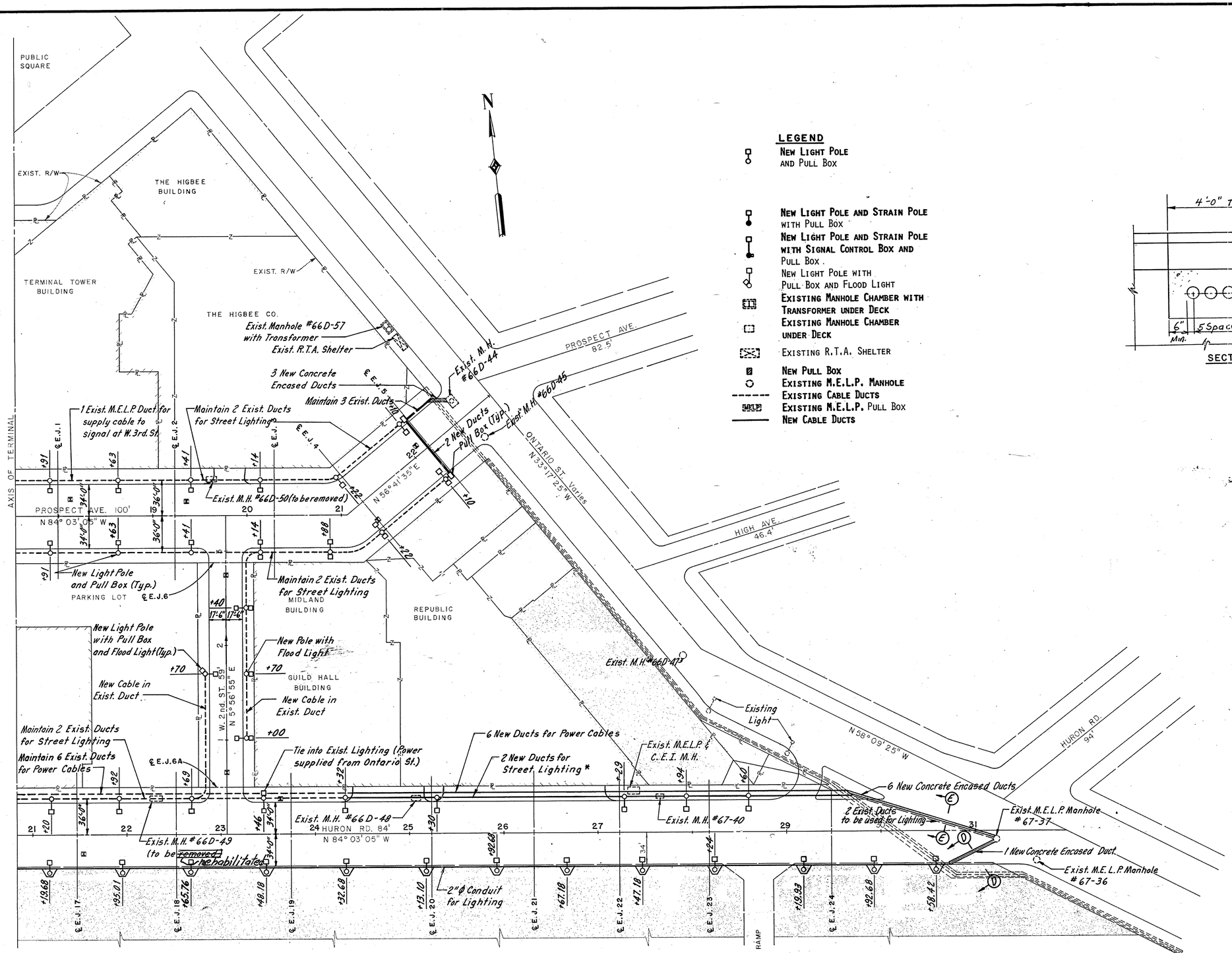

LEGEND

- New Light Pole and Pull Box
- New Light Pole and Strain Pole with Pull Box
- New Light Pole and Strain Pole with Signal Control Box and Pull Box.
- New Light Pole with Pull Box and Flood Light
- Existing Manhole Chamber with Transformer under Deck
- Existing Manhole Chamber under Deck
- Existing R.T.A. Shelter
- New Pull Box
- Existing M.E.L.P. Manhole
- Existing Cable Ducts
- Existing M.E.L.P. Pull Box
- New Cable Ducts

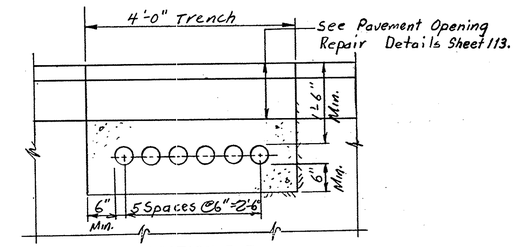

SECTION E-E

NOTES:

Proposed Light & Pull Boxes are to be located in existing Light and Pull Box locations.

New lighting cable to be pulled into one of the *two* existing M.E.L.P. Ducts. Signal Phasing will be provided by the City of Cleveland Traffic Department.

For Section D-D see Sheet 117.

For location of 2"Ø lighting conduit on south side of Huron Road at ramp see Sheets 33 & 111.

* New Ducts shall be provided where the existing ducts are damaged and/or removed with the sidewalk structural deck replacement.

Revised 8-6-84

EUTHENICS INC.
CONSULTING ENGINEERS
CLEVELAND OHIO

REHABILITATION OF TOWER CITY BRIDGES
PORTIONS OF PROSPECT AVE., HURON RD., WEST 2nd. & 3rd. ST. VIADUCTS

M.E.L.P. UTILITY PLANS

CLEVELAND CUYAHOGA COUNTY OHIO

Made JSC	Trcd. JSC	Ckd. LJD	Rev. RAB	Scale: As Noted
Date 9-8-82	Date 9-16-82	Date 10-1-82	Date 10-12-82	Sheet 118/170

FHWA REGION	STATE	PROJECT	
5	OHIO	M-ID 99 (9)	

119/170

CUYAHOGA COUNTY
HURON / PROSPECT BRIDGE

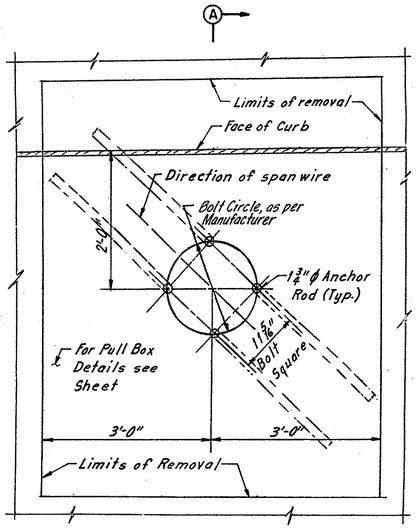

Note: Anchorage at South Sidewalk shown, North Sidewalk similar.

PLAN

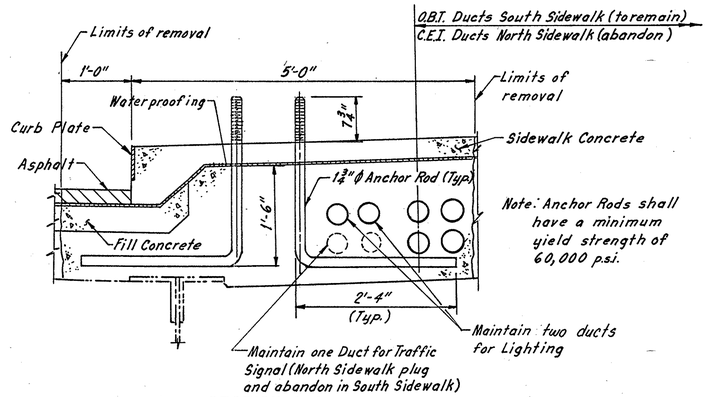

Note: Anchor Rods shall have a minimum yield strength of 60,000 p.s.i.

SECTION A-A

(Typical Anchor Detail for combination Light and Signal Pole)

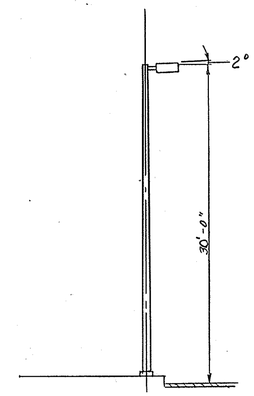

TYPICAL LIGHT POLE INSTALATION

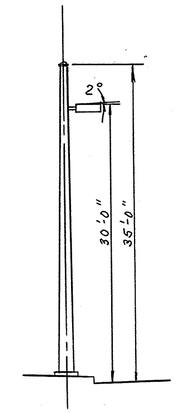

COMBINATION LIGHT AND SIGNAL POLE
WEST 3RD ST. AND PROSPECT AVE.

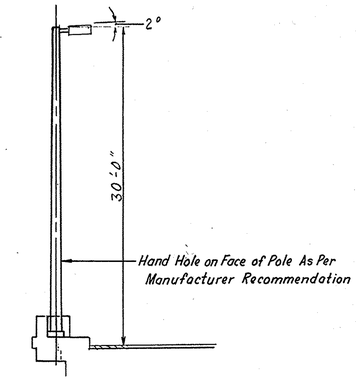

LIGHT POLE INSTALATION
HURON RD. - SOUTH SIDE

M.E.L.P. QUANTITIES TYPE CODE Y060

TOTAL QUANT.	UNIT	ITEM	DESCRIPTION	
76	Each	202	Removal of Existing Light Poles	
36	Each	202	Removal of Existing Pull Boxes, As Per Plan	
60	Each	625	Light Pole Single Mast, As Per Plan	
27	Each	625	Light Pole Single Mast, with Handhole, As Per Plan	
89	Each	625	Connector Kit Type II	
89	Each	625	Connector Kit Type III	
2130	L.F.	625	Lighting Conduit 2", 713.04	
17262	L.F.	625	#4 AWG 600 Volt Distribution Cable	
4188	L.F.	625	#12 AWG Pole and Bracket Cable	
27	Each	625	Lighting Junction Box	
1	Each	632	Signal Strain Pole	
2	Each	632	Combination Signal, Strain and Light Pole Type TC-81.10	
			Design 12, 35'-0"	
2	Set	Special	Anchor Bolts for Combination Signal Pole & Light 1¾" ϕ x 56"	
9700	L.F.	Special	Temp. Power Cables Installation (Fiberglass Ducts)	
62	Each	Special	Concrete Pull Boxes, As Per Plan	
87	Set	Special	Anchor Bolts for Light Pole 1½" ϕ x 41"	
9068	L.F.	Special	Power Cable 3/c 15KV #4/0 x LP	
9700	L.F.	Special	Power Cable (Temporary) 3/c 15KV #4/0	
8200	L.F.	Special	Power Ducts 4" P.V.C.	
5525	L.F.	Special	Lighting Ducts 3½" P.V.C.	
185	L.F.	Special	Concrete Encased 3½" ϕ P.V.C. Conduit	
300	L.F.	Special	Concrete Encased 4" ϕ P.V.C. Conduit	
216	L.F.	Special	Concrete Encased 2" ϕ Lighting Conduit	

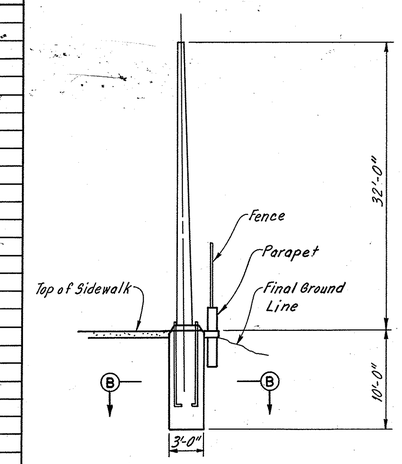

SIGNAL POLE & FOUNDATION
(Prospect Ave. at Superior Ave.)

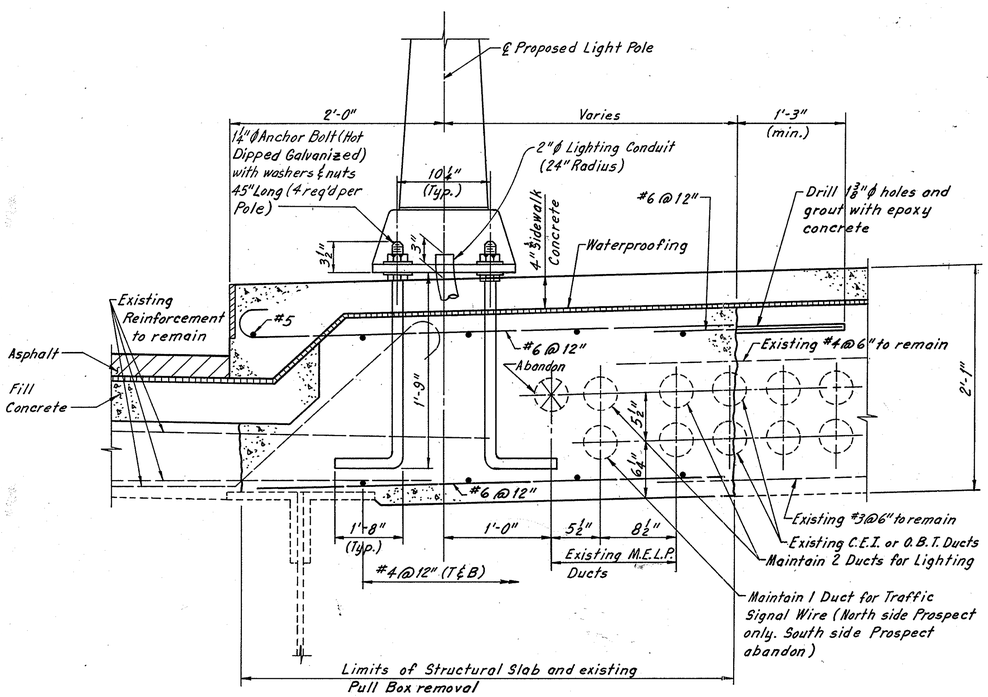

SECTION H-H
(Typical Light Pole Anchorage Details)

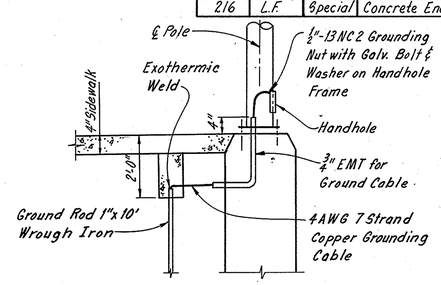

STRAIN POLE GROUND ROD DETAIL

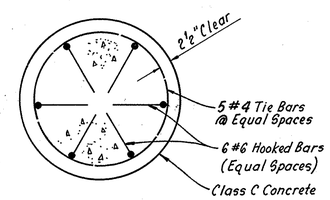

SECTION B-B

EUTHENICS INC.
CONSULTING ENGINEERS
CLEVELAND OHIO

REHABILITATION OF TOWER CITY BRIDGES
PROSPECT AVE., HURON ROAD,
WEST 2ND., 3RD. & 6TH. ST. VIADUCTS

M.E.L.P. UTILITY PLANS
LIGHTING DETAILS AND QUANTITIES

CLEVELAND CUYAHOGA COUNTY OHIO

Mode LRH	Trcd. JSC	Ckd. LJD	Rev. RAB	Revised
Date 2-8-82	Date 4-5-82	Date 10-15-82	Date 10-25-82	Sheet 119/170

FHWA REGION	STATE	PROJECT	
5	OHIO	M-ID 99 (9)	

120/170

CUYAHOGA COUNTY
HURON / PROSPECT BRIDGE

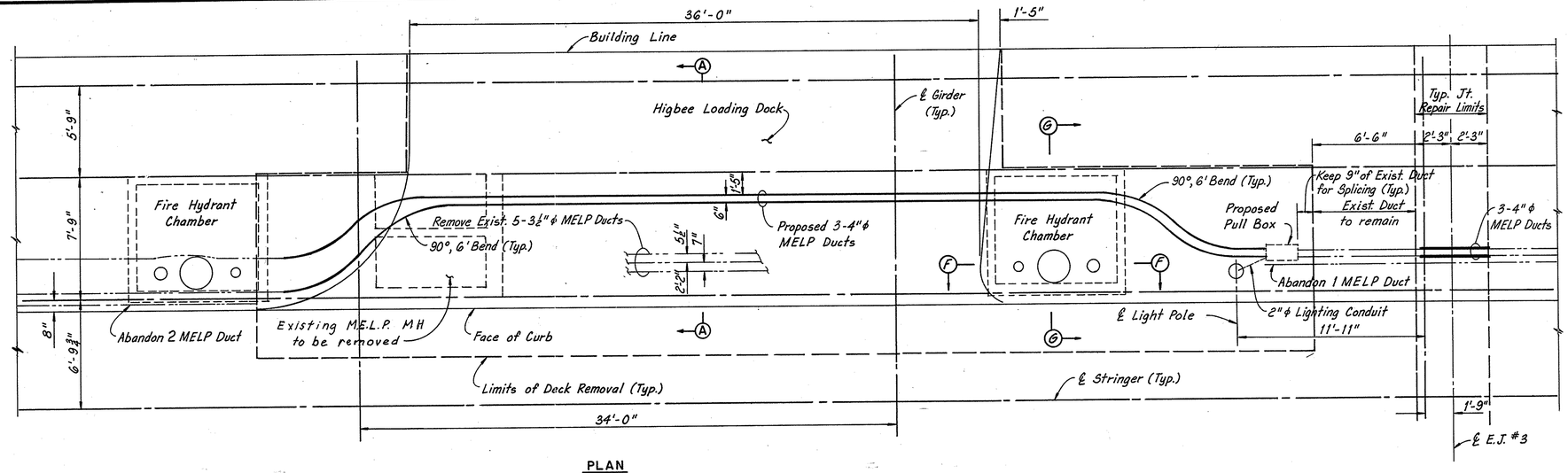

PLAN

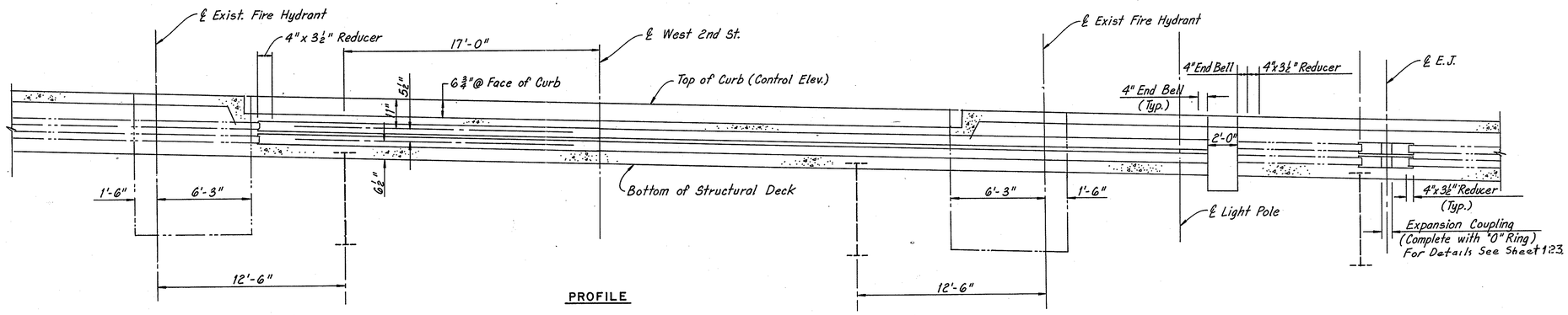

PROFILE

NOTE:
For Sections F-F & G-G see Sheet 24.

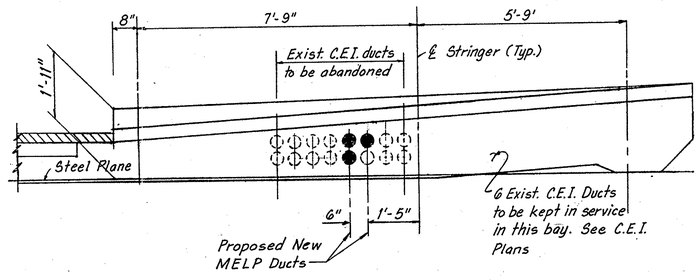

SECTION A-A
Scale: ½" = 1'-0"

EUTHENICS INC.
CONSULTING ENGINEERS
CLEVELAND OHIO

REHABILITATION OF TOWER CITY BRIDGES
PORTIONS OF PROSPECT AVE., HURON RD., WEST 2nd. & 3rd. ST. VIADUCTS

MELP UTILITY PLANS

RELOCATED DUCT - HIGBEES LOADING DOCK, PROSPECT AVE.

CLEVELAND CUYAHOGA COUNTY OHIO

Made LRH	Trcd. JGC	Ckd. LJD	Rev. RAB	Scale: No Scale
Date 2-9-82	Date 4-6-82	Date 10-15-82	Date 10-25-82	Sheet 120/170

FHWA REGION	STATE	PROJECT	
5	OHIO	M-ID 99 (9)	

121/170

CUYAHOGA COUNTY
HURON / PROSPECT BRIDGE

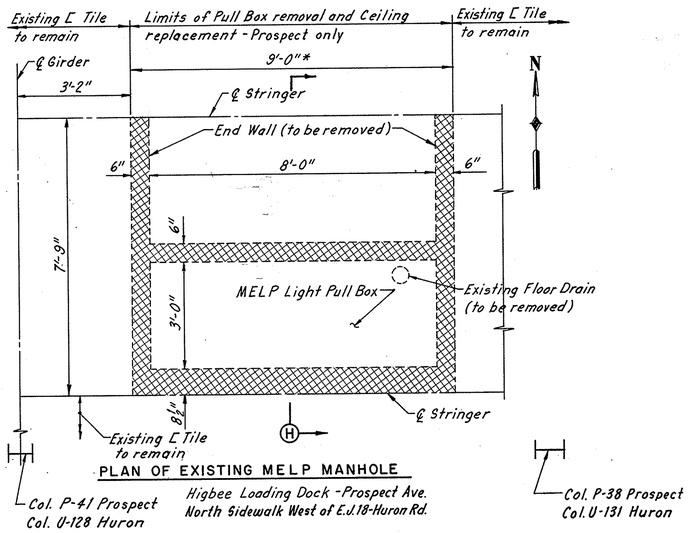

PLAN OF EXISTING MELP MANHOLE

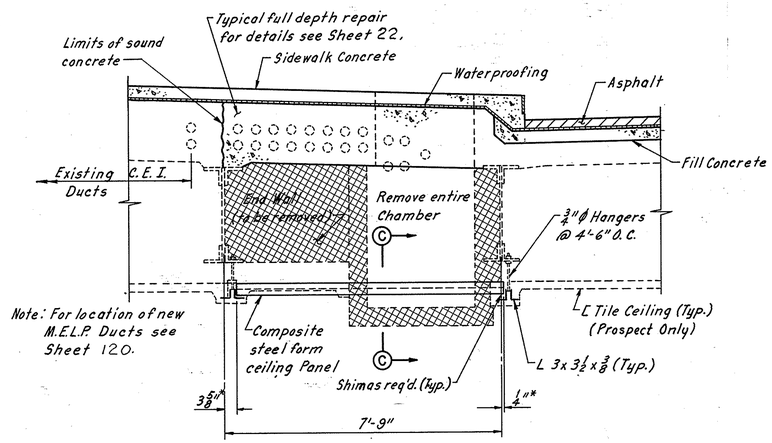

SECTION H-H

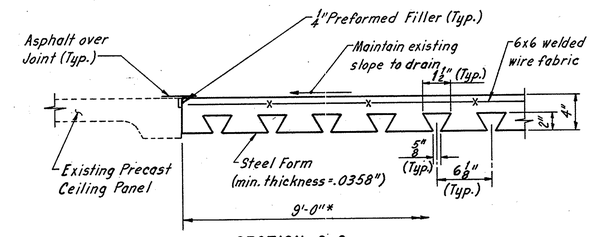

SECTION C-C
(Approximate length 7'-5⅛").
(Prospect Only)

NOTE:
* INDICATES APPROXIMATE DIMENSIONS. CONTRACTOR SHALL VERIFY DIMENSIONS AND FURNISH SHOP DRAWINGS SHOWING REPLACEMENT CEILING. STEEL FORM SHALL NOT BE SET ON TOP OF EXISTING SUPPORT ANGLES UNTIL ALL DAMAGED SUPPORT ANGLES AND RODS ARE REPAIRED AND ACCEPTABLE TO THE ENGINEER.

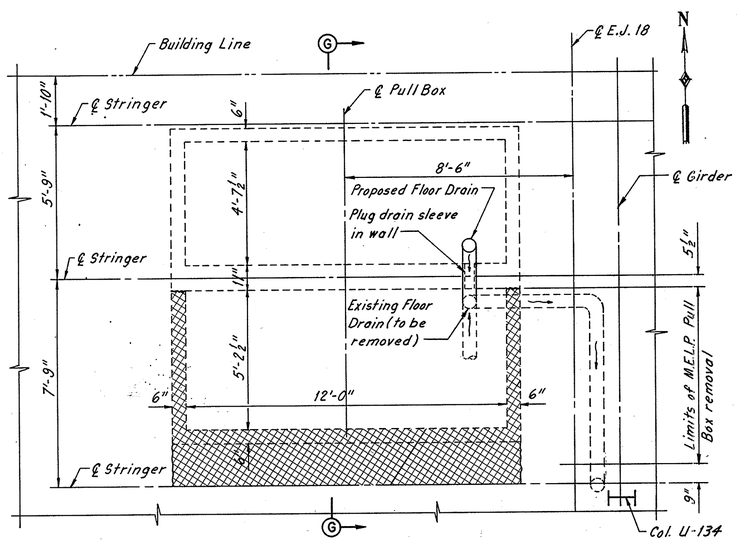

PLAN OF PULL BOX
(Remove M.E.L.P. Pull Box in North Sidewalk of Huron Rd.)

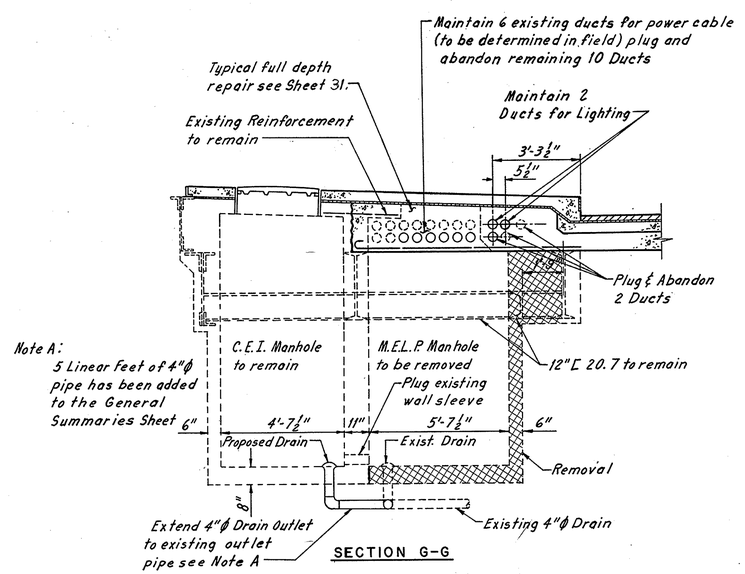

SECTION G-G

EUTHENICS INC.
CONSULTING ENGINEERS
CLEVELAND OHIO

REHABILITATION OF TOWER CITY BRIDGES
PORTIONS OF PROSPECT AVE., HURON RD., WEST 2nd. & 3rd. ST. VIADUCTS

M.E.L.P. UTILITY PLANS
MISCELLANEOUS DETAILS

CLEVELAND CUYAHOGA COUNTY OHIO

Made LRH	Trcd. JSC	Ckd. LJD	Rev. RAB	Scale: No Scale
Date 2-10-82	Date 4-7-82	Date 10-15-82	Date 10-25-82	Sheet 121/170

FHWA REGION	STATE	PROJECT	
5	OHIO	M-1D 99 (9)	

122/170

CUYAHOGA COUNTY
HURON / PROSPECT BRIDGE

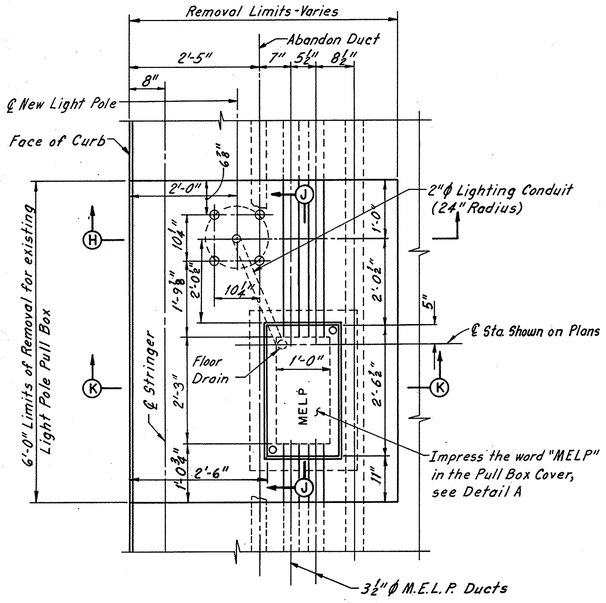

PLAN-LIGHT PULL BOX
Replacement

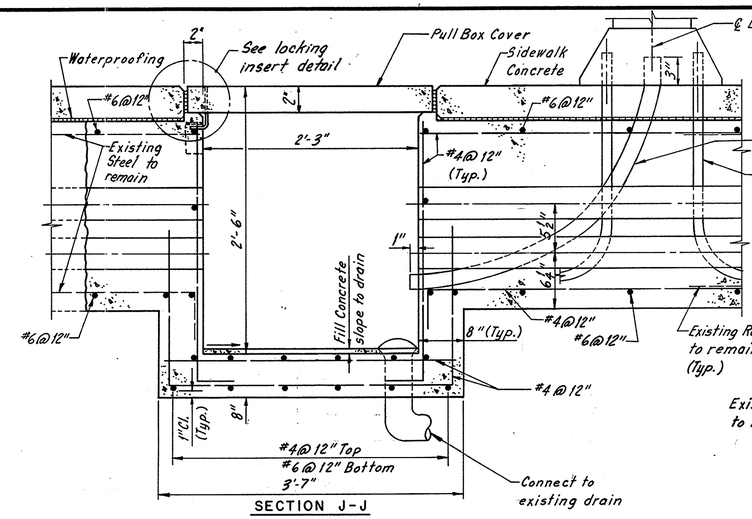

SECTION J-J

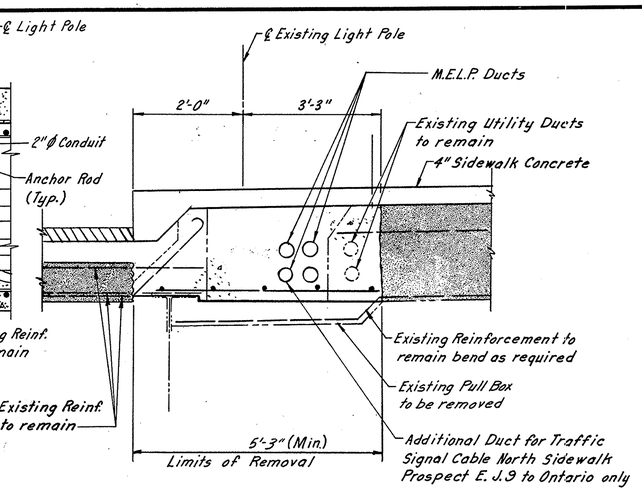

SECTION L-L

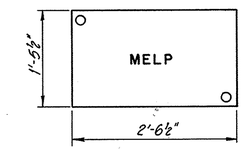

PULL BOX COVER
LOCKING STYLE

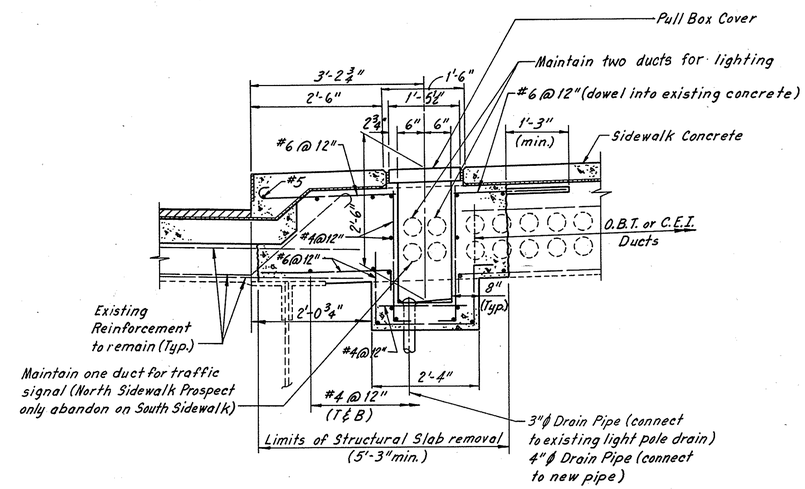

SECTION K-K

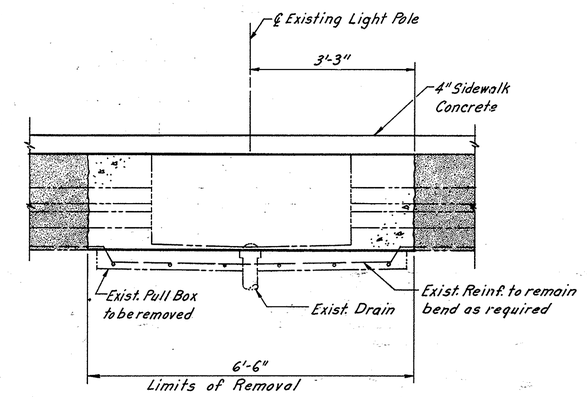

SECTION M-M

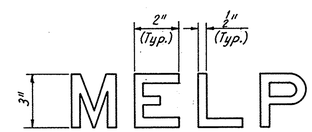

DETAIL A

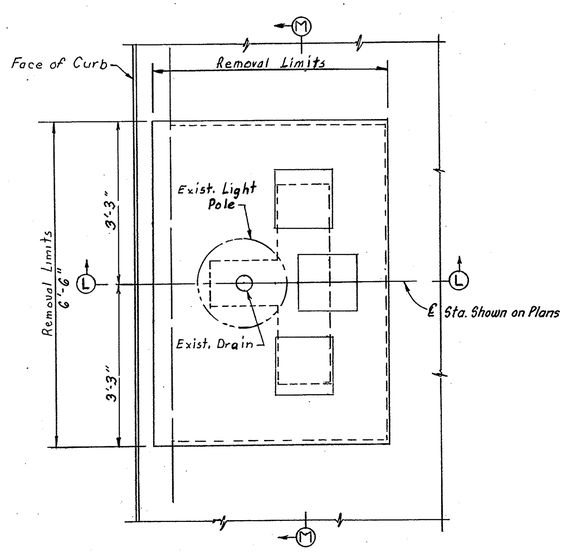

PLAN — LIGHT PULL BOX
Remove

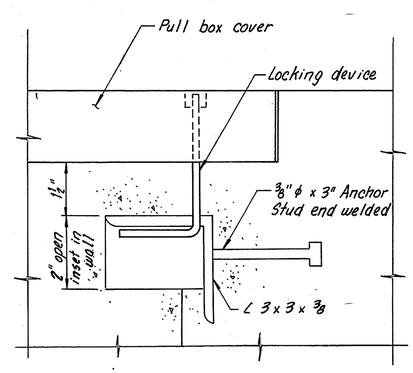

LOCKING INSERT DETAIL

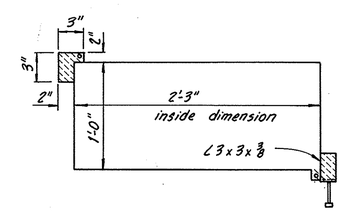

PLAN VIEW
Locking Insert

NOTE:
For Section H-H see Sheet 119.

EUTHENICS INC.
CONSULTING ENGINEERS
CLEVELAND OHIO

REHABILITATION OF TOWER CITY BRIDGES
PORTIONS OF PROSPECT AVE., HURON RD., WEST 2nd. & 3rd. ST. VIADUCTS

M.E.L.P. UTILITY PLANS
MISCELLANEOUS DETAILS

CLEVELAND	CUYAHOGA COUNTY	OHIO
Mode LRH	Trcd. JSC	Ckd. LJD	Rev. RAB	Scale: No Scale
Date 2-11-82	Date 4-8-82	Date 10-15-82	Date 10-25-82	Sheet 122/170

FHWA REGION	STATE	PROJECT	
5	OHIO	M-ID 99 (9)	

123
170

CUYAHOGA COUNTY
HURON/ PROSPECT BRIDGE

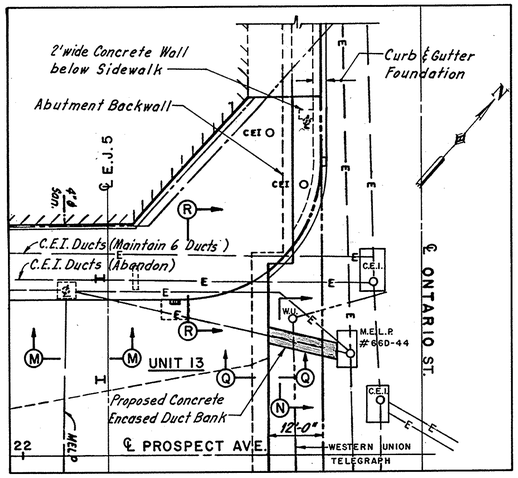

PLAN VIEW
(Corner of Prospect Ave. and Ontario St.)

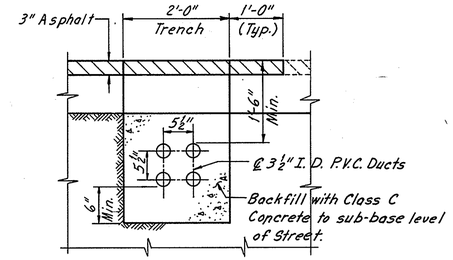

SECTION N-N

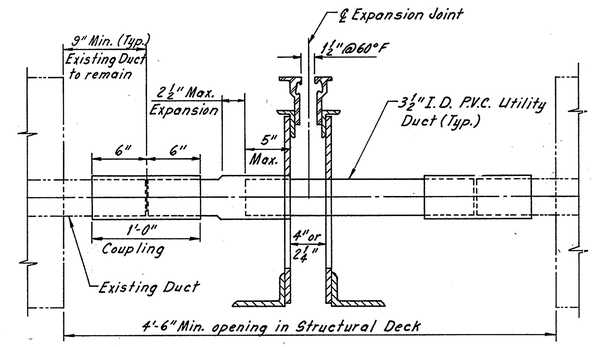

TYPICAL EXPANSION JOINT DETAIL

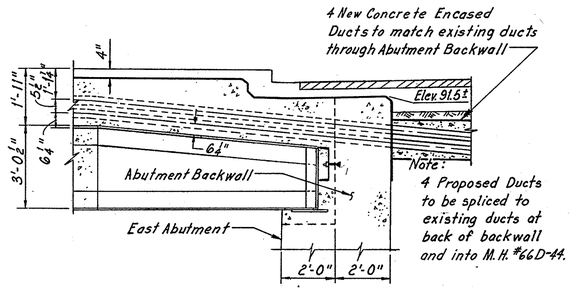

SECTION Q-Q
(Looking North)

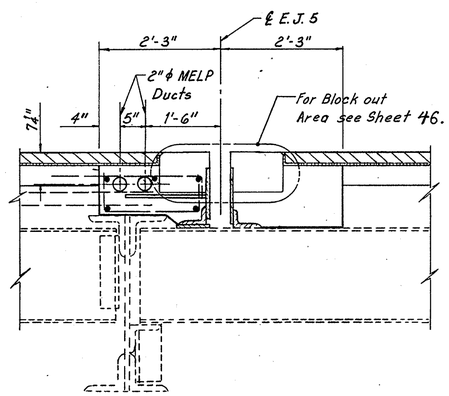

SECTION M-M
(Looking North)

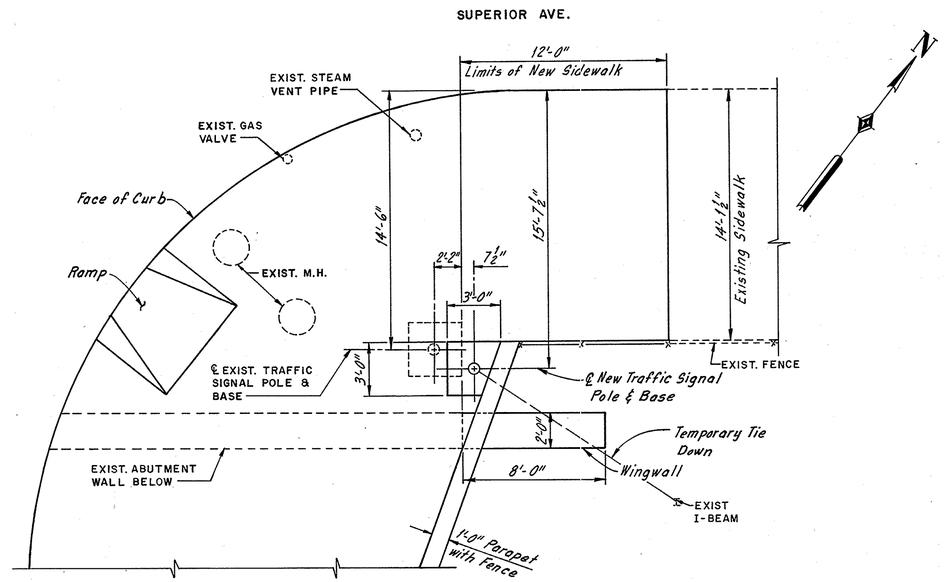

DETAIL A

NOTE: For Strain Pole Foundation Details see Sheet 119.

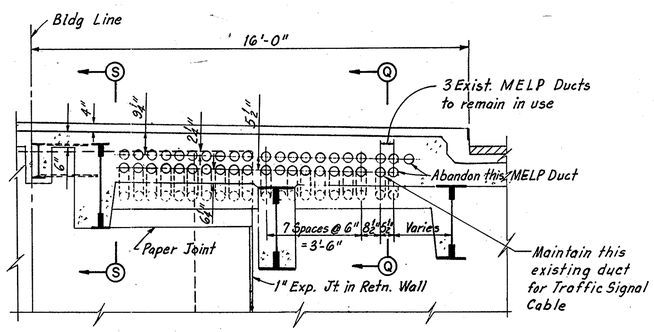

SECTION R-R

NOTE: For Repaving over Concrete Encased Duct Detail see Sheet 113.

EUTHENICS INC.
CONSULTING ENGINEERS
CLEVELAND OHIO

REHABILITATION OF TOWER CITY BRIDGES
PORTIONS OF PROSPECT AVE., HURON RD., WEST 2nd. & 3rd. ST. VIADUCTS

M.E.L.P. UTILITY PLANS
MISCELLANEOUS DETAILS

CLEVELAND CUYAHOGA COUNTY OHIO

Made LRH	Trcd. JSC	Ckd. LJD	Rev. RAB	Scale: No Scale
Date 2-11-82	Date 4-8-82	Date 10-15-82	Date 10-25-82	Sheet 123/170

FHWA REGION	STATE	PROJECT	
5	OHIO	IX-ID99(9)	

123A

CUYAHOGA COUNTY
HURON/PROSPECT BRIDGE

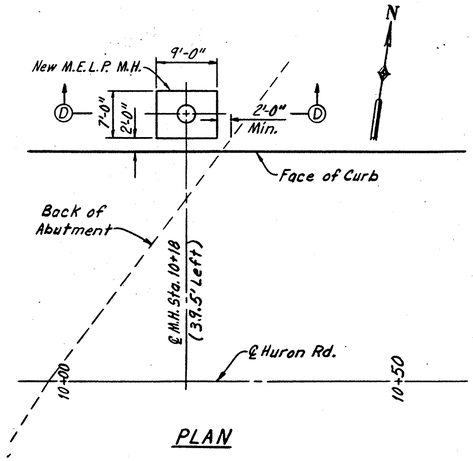

PLAN

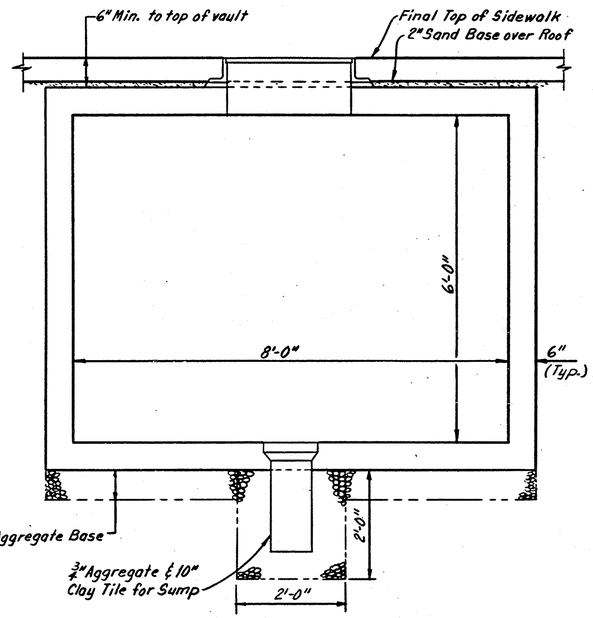

SECTION D-D

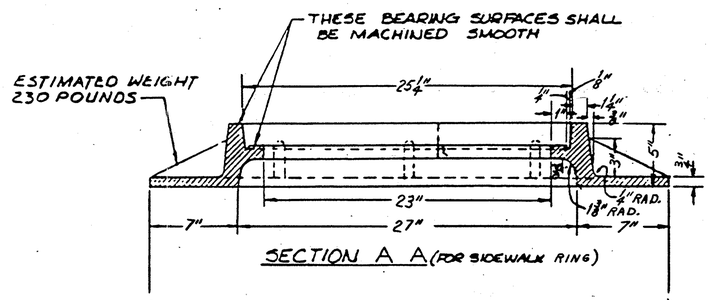

SECTION A A (FOR SIDEWALK RING)

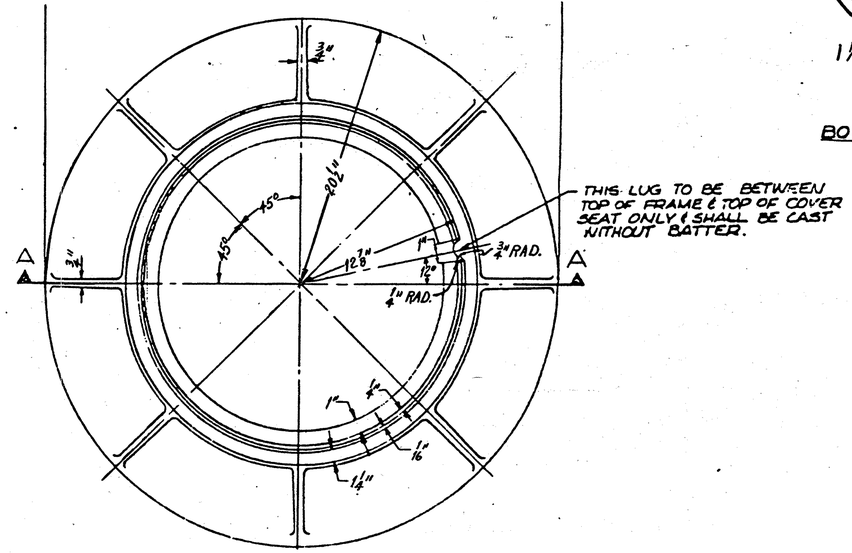

DETAIL OF
STANDARD C.I. MANHOLE RING

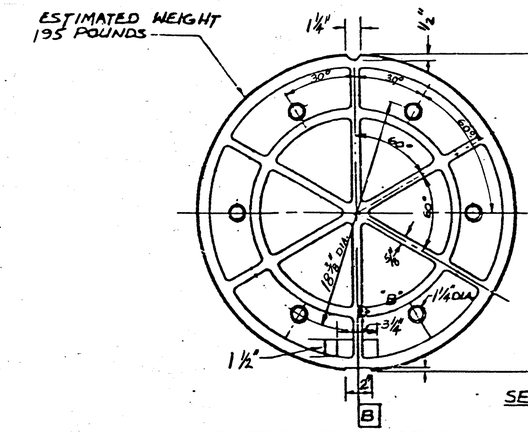

BOTTOM PLAN DETAIL

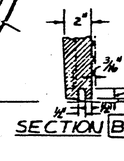

SECTION B

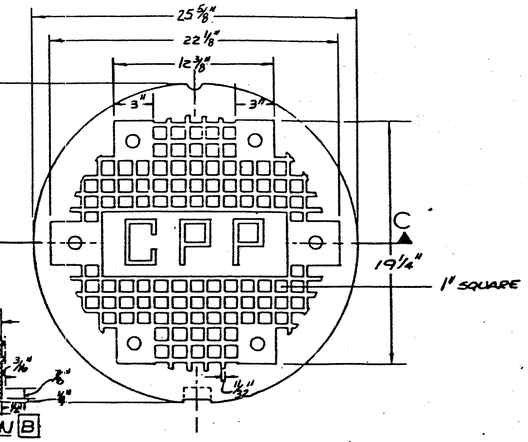

TOP PLAN DETAIL

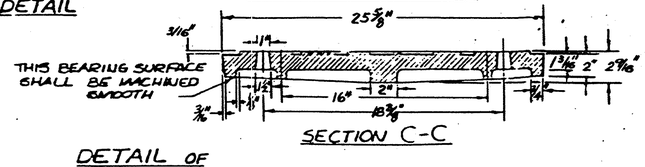

SECTION C-C

DETAIL OF
STANDARD C.I. MANHOLE COVER

NOTE:
ALL COVERS AND FRAMES MUST BE INTERCHANGEABLE. COVERS FOR STREET AND SIDEWALK FRAMES ARE IDENTICAL.

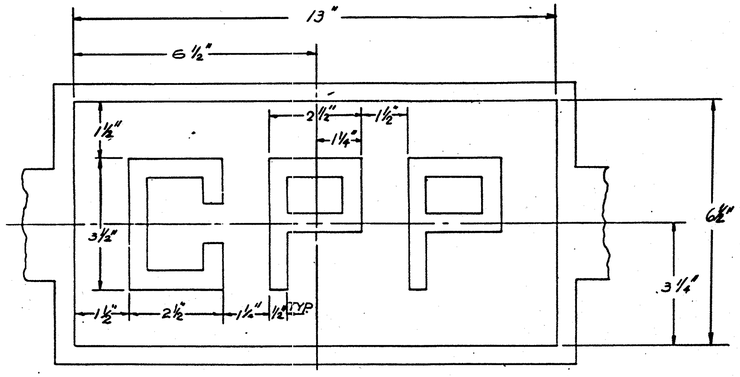

NOTES:

1. THE PRECAST M.E.L.P. MANHOLE SHALL BE A STANDARD 6'-0" x 8'-0" UTILITY VAULT AS MANUFACTURED BY MACK UTILITY VAULT, INC. 201 COLUMBIA ROAD VALLEY CITY, OHIO 44280 OR AN APPROVED EQUAL.
2. THE PRECAST M.E.L.P. MANHOLE SHALL BE REINFORCED WITH #5 DEFORMED (GRADE 60) REINFORCING STEEL PLACED TO MEET TRAFFIC (H-20) LOADING.
3. CABLE RACKS AND CABLE RACK SUPPORTS (TYPE "S") SHALL BE MACK INDUSTRIES NUMBER MUV-B-2 OR AN APPROVED EQUAL.
4. PLASTIC DUCT TERMINATORS SHALL BE AS RECOMMENDED BY THE VAULT MANUFACTURER.
5. THE PRECAST M.E.L.P. MANHOLE SHALL BE SET IN 6" GRANULAR BEDDING.

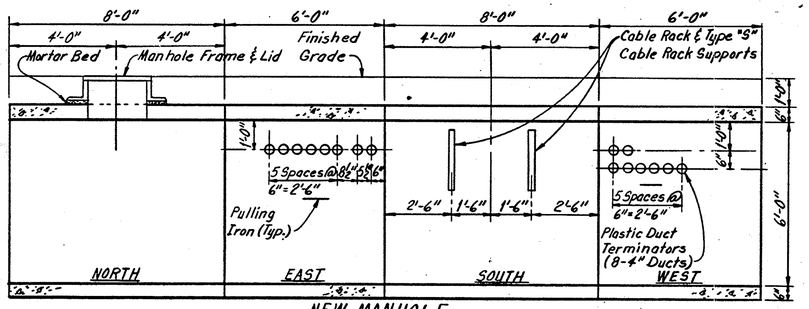

NEW MANHOLE
Developed Elevation (inside walls)

EUTHENICS INC.
CONSULTING ENGINEERS
CLEVELAND OHIO

REHABILITATION OF TOWER CITY BRIDGES
PROSPECT AVE., HURON ROAD,
WEST 2ND., 3RD. & 6TH. ST. VIADUCTS

M.E.L.P. UTILITY PLANS
PRECAST MANHOLE DETAILS

CLEVELAND CUYAHOGA COUNTY OHIO

Made LJD	Trc'd. JSC	Chk'd. JSC	Rev. RAB	Scale:
Date 7-9-84	Date 7-10-84	Date 7-10-84	Date 7-10-84	Sheet 123A

Sheet added 8-6-84

ODOT-TES 7-10-84

MARK	NO.	LENGTH	TYPE	SER. INCR.	WEIGHT (LBS.)
UNIT 1					
SA-401	411	30'-0"	Str.		8,236
SA-402	470	7'-3"	Str.		2,276
SA-403	1 Ser.31	4'-3" / 35'-6"	Str.	1'-0 1/2"	412
SA-404	12	36'-0"	Str.		289
SA-405	34	5'-3"	10		119
*SA-406	268	3'-9"	10		*671
SA-407	46	3'-10"	8		118
SA-408	16	17'-9"	Str.		190
SA-409	15	7'-5"	2		74
SA-410	15	30'-0"	2		301
SA-411	1 Ser.15	21'-6" / 38'-0"	Str.	1'-2 1/8"	298
SA-412	1 Ser.15	11'-0" / 26'-0"	Str.	1'-1"	185
SA-413	1 Ser.15	6'-0" / 20'-0"	2	1'-0"	130
SA-414	1 Ser.15	6'-0" / 20'-0"	Str.	1'-0"	130
SA-415	2 Ser.15	4'-0" / 25'-0"	Str.	1'-6"	290
SA-416	13	4'-9"	6		41
SA-417	6	14'-0"	Str.		56
SA-418	1 Ser.17	6'-0" / 40'-0"	Str.	2'-1 1/2"	261
SA-419	48	4'-3"	10		136
SA-420	1 Ser.22	9'-0" / 28'-0"	Str.	10 3/8"	272
SA-421	1 Ser.25	4'-0" / 28'-0"	Str.	1'-0"	267
LIGHT PULL BOX 3 EACH					
LA-421	24	3'-5"	5		54
LA-422	30	3'-0"	Str.		60
LA-423	36	1'-10"	Str.		45
LA-424	9	6'-7"	6		39
LA-425	18	5'-7"	6		66
SA-501	413	30'-0"	Str.		12,923
SA-502	275	22'-0"	Str.		6,310
SA-503	1 Ser.17	6'-0" / 40'-0"	Str.	2'-1 1/2"	408
SA-504	38	21'-6"	Str.		852
SA-505	1 Ser.52	3'-0" / 29'-6"	Str.	6 3/8"	881
SA-506	1 Ser.67	3'-0" / 38'-0"	Str.	6 3/8"	1433
SA-507	1 Ser.28	6'-0" / 37'-3"	Str.	1'-1 7/8"	632
SA-508	1 Ser.23	5'-9" / 29'-9"	Str.	1'-1 7/8"	426
SA-509	1 Ser.20	11'-8" / 29'-9"	Str.	11 1/2"	432
SA-510	180	7'-5"	27		1,393
SA-511	180	5'-1"	5		954
SA-512	1	24'-0"	Str.		25
*SA-513	2	24'-10"	24		*52
*SA-514	1	32'-4"	34		*34
*SA-515	5	22'-0"	Str.		*115
SA-601	291	30'-0"	Str.		13,112
SA-602	122	14'-2"	Str.		2,596
SA-603	50	16'-0"	1		1,202
SA-604	74	15'-4"	2		1,704
SA-605	116	21'-3"	Str.		3,702
SA-606	74	13'-0"	2		1,445
SA-607	1 Ser.30	14'-1" / 29'-6"	Str.	6 3/8"	982
SA-608	2 Ser.18	5'-0" / 14'-0"	Str.	6 3/8"	514
SA-609	1 Ser.52	3'-0" / 30'-0"	Str.	6 3/8"	1,289
SA-610	1 Ser.15	22'-1" / 29'-6"	Str.	6 3/8"	581
SA-611	1 Ser.7	16'-0" / 33'-0"	1	2'-10"	258

MARK	NO.	LENGTH	TYPE	SER. INCR.	WEIGHT (LBS.)
SA-612	1 Ser.17	5'-4" / 32'-0"	1	1'-8"	477
SA-613	1 Ser.33	4'-0" / 19'-0"	Str.	5 5/8"	570
SA-614	1 Ser.13	3'-0" / 18'-0"	Str.	1'-3"	205
SA-615	1 Ser. 9	7'-8" / 15'-8"	1	1'-0"	158
SA-616	1 Ser. 9	7'-0" / 15'-0"	2	1'-0"	149
SA-617	69	17'-9"	64		1840
SA-618	80	16'-3"	2		1953
SA-619	1 Ser. 9	8'-10" / 17'-6"	64	1'-1"	180
SA-620	1 Ser. 9	7'-4" / 16'-0"	2	1'-1"	158
SA-621	16	16'-3"	5		391
SA-622	16	15'-5"	2		371
SA-623	48	5'-7"	Str.		403
SA-624	48	7'-7"	Str.		547
SA-625	137	3'-5"	2		704
SA-626	10	18'-11"	Str.		284
SA-627	30	4'-11"	4		222
*SA-628	4	30'-0"	Str.		*180
*SA-629	2	14'-2"	Str.		*43
SA-701	2	19'-6"	Str.		80
SA-702	2	24'-10"	Str.		102
*SA-703	4	23'-10"	Str.		*195
SA-704	8	13'-8"	Str.		224
SA-801	92	4'-4"	8		815
* TOTAL WEIGHT EPOXY COATED					1,290
TOTAL WEIGHT NON-EPOXY COATED					78,232
UNIT 2					
SB-401	286	30'-0"	Str.		5,731
SB-402	440	7'-3"	Str.		2,131
SB-403	113	32'-7"	Str.		2,459
SB-404	12	36'-0"	Str.		289
SB-405	34	5'-3"	10		119
*SB-406	286	3'-9"	10		*716
SB-407	46	3'-10"	8		118
LIGHT PULL BOX 2 EACH					
LB-421	16	3'-5"	5		36
LB-422	20	3'-0"	Str.		40
LB-423	24	1'-10"	Str.		30
LB-424	6	6'-7"	6		26
LB-425	12	5'-7"	6		44
SB-501	289	30'-0"	Str.		9,042
SB-502	286	22'-0"	Str.		6,563
SB-503	73	32'-2"	Str.		2,449
SB-601	278	30'-0"	Str.		12,527
SB-602	139	14'-2"	Str.		2,958
SB-603	184	16'-0"	1		4,422
SB-604	184	15'-4"	2		4,238

MARK	NO.	LENGTH	TYPE	SER. INCR.	WEIGHT (LBS.)
SB-625	137	3'-5"	2		704
SB-627	30	4'-11"	3		222
*SB-628	8	30'-0"	Str.		*260
*SB-629	4	14'-2"	Str.		*76
* TOTAL WEIGHT EPOXY COATED					1,052
TOTAL WEIGHT NON-EPOXY COATED					54,152
UNIT 3					
SC-401	286	30'-0"	Str.		5,731
SC-402	440	7'-3"	Str.		2,131
SC-403	113	27'-11"	Str.		2,108
SC-405	68	5'-3"	10		238
*SC-406	286	3'-9"	10		*716
SC-407	92	3'-10"	8		236
SC-408	30	28'-9"	Str.		576
LIGHT PULL BOX 2 EACH					
LC-421	16	3'-5"	5		36
LC-422	20	3'-0"	Str.		40
LC-423	24	1'-10"	Str.		30
LC-424	6	6'-7"	6		26
LC-425	12	5'-7"	6		44
SC-501	283	30'-0"	Str.		8,855
SC-502	274	22'-0"	Str.		6,287
SC-503	73	28'-8"	Str.		2,183
SC-601	266	30'-0"	Str.		17,986
SC-602	133	14'-2"	Str.		2,830
SC-603	178	16'-0"	1		4,278
SC-604	178	15'-4"	2		4,099
*SC-628	8	30'-0"	Str.		*360
*SC-629	4	14'-2"	Str.		*85
* TOTAL WEIGHT EPOXY COATED					1,161
TOTAL WEIGHT NON-EPOXY COATED					57,714

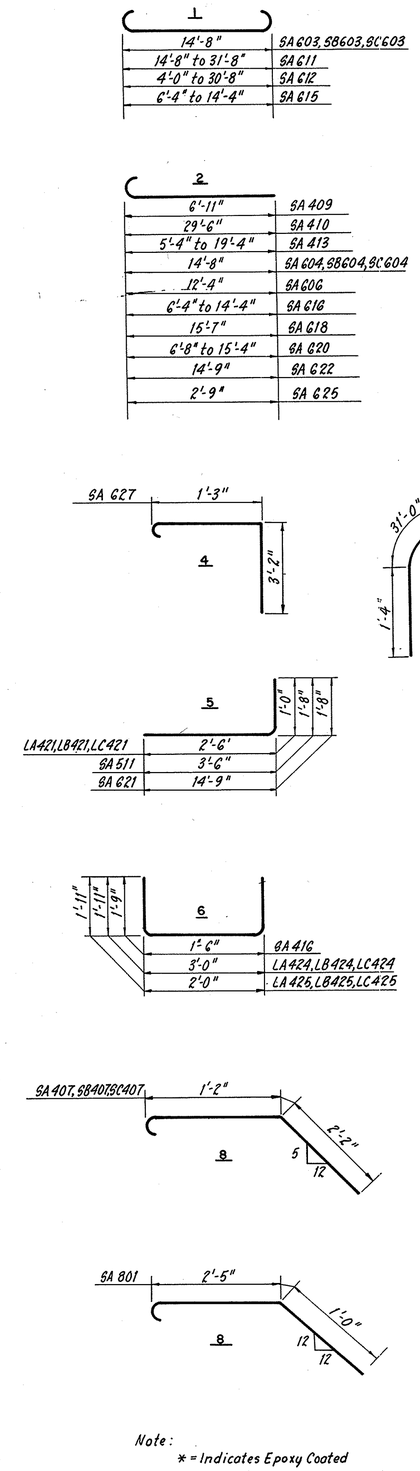

Note:
* = Indicates Epoxy Coated

FHWA REGION	STATE	PROJECT	
5	OHIO	M-ID 99 (9)	

124
170

CUYAHOGA COUNTY
HURON / PROSPECT BRIDGE

Note: For Reinforcing Steel Samples Note see Sheet 129.

EUTHENICS INC.
CONSULTING ENGINEERS
CLEVELAND OHIO

REHABILITATION OF TOWER CITY BRIDGES
PROSPECT AVE., HURON ROAD,
WEST 2 ND., 3 RD. & 6 TH. ST. VIADUCTS
REINFORCEMENT SCHEDULE

UNITS 1 THRU 3
PROSPECT AVE.

CLEVELAND CUYAHOGA COUNTY OHIO

Made LJD	Trcd. TLW	Ckd. LJD	Rev. RAB	Revised
Date 5-10-82	Date 10-4-82	Date 10-15-82	Date 10-28-82	Sheet 124/170

FHWA REGION	STATE	PROJECT	
5	OHIO	M-ID 99 (9)	

125/170

CUYAHOGA COUNTY
HURON / PROSPECT BRIDGE

MARK	NO.	LENGTH	TYPE	SER. INCR.	WEIGHT (LBS.)
UNIT 14					
SE-401	2 Ser.16	3'-10" / 15'-3"	Str.	9 1/8"	204
SE-402	89	36'-2"	Str.		2,150
SE-403	1 Ser.34	1'-10" / 35'-2"	Str.	12 1/8"	420
SE-404	1 Ser.38	3'-0" / 35'-4"	Str.	10 1/2"	487
SE-406	16	4'-0"	6		43
*SE-408	69	3'-9"	10		*173
*SE-409	4	36'-0"	Str.		*93
*SE-501	1	17'-6"	Str.		*18
SE-502	64	36'-1"	Str.		2,409
SE-503	12	3'-6"	9		44
SE-504	1 Ser.26	4'-3" / 36'-0"	Str.	1'-3 1/4"	546
SE-505	1 Ser.22	2'-11" / 34'-10"	Str.	1'-6 1/4"	433
SE-506	105	5'-1"	5		557
SE-507	105	7'-5"	27		813
SE-508	21	30'-0"	Str.		657
SE-509	7	20'-0"	Str.		146
SE-528	45	5'-7"	11		262
SE-601	53	30'-0"	Str.		2,388
SE-602	1 Ser.19	17'-0" / 30'-0"	Str.	8 5/8"	671
SE-603	1 Ser.51	5'-8" / 38'-6"	Str.	7 7/8	1,672
SE-604	12	14'-6"	Str.		261
SE-605	1 Ser.30	10'-0" / 31'-9"	Str.	9"	941
SE-606	41	32'-6"	Str.		2,001
SE-607	53	34'-10"	Str.		2,773
SE-608	3	17'-9"	Str.		80
SE-609	1 Ser.32	6'-8" / 27'-0"	Str.	7 7/8"	809
SE-610	85	12'-1"	2		1,543
SE-611	1 Ser.53	5'-2" / 33'-8"	Str.	6 5/8"	1,546
SE-612	1 Ser.33	16'-1" / 36'-3"	Str.	7 1/2"	1,297
SE-613	1 Ser.33	3'-6" / 23'-8"	2	7 1/2"	673
SE-614	1 Ser.18	13'-8" / 22'-11"	2	7"	495
SE-615	1 Ser.34	3'-7" / 21'-8"	2	6 5/8"	645
SE-616	68	7'-2"	Str.		732
SE-617	52	9'-4"	Str.		729
SE-618	6	17'-0"	1		153
SE-619	18	15'-0"	2		410
SE-801	56	4'-4"	8		648
* TOTAL WEIGHT EPOXY COATED					287
TOTAL WEIGHT NON-EPOXY COATED					29,676

MARK	NO.	LENGTH	TYPE	SER. INCR.	WEIGHT (LBS.)
UNIT 15					
SF-401	112	30'-0"	Str.		2,244
SF-402	386	36'-0"	Str.		9,283
SF-403	1 Ser. 7	29'-1" / 32'-6"	Str.	6 7/8"	144
SF-404	16	15'-0"	Str.		160
SF-405	16	12'-1"	Str.		129
SF-406	32	4'-0"	6		86
SF-407	1 Ser. 9	28'-2" / 32'-6"	Str.	6 1/2"	182
*SF-408	138	3'-9"	10		*346
*SF-409	8	36'-0"	Str.		*192
LIGHT PULL BOX 2 EACH					
LF-421	16	3'-5"	5		36
LF-422	20	3'-0"	Str.		40
LF-423	24	1'-10"	Str.		30
LF-424	6	6'-7"	6		26
LF-425	12	5'-7"	6		44
*SF-501	3	30'-0"	Str.		*94
SF-502	266	36'-1"	Str.		10,011
SF-503	129	3'-6"	9		471
*SF-504	1	26'-4"	Str.		*27
*SF-505	1	22'-11"	24		*24
SF-514	14	1'-11"	5		28
SF-528	86	5'-7"	11		501
SF-601	144	30'-0"	Str.		6,489
SF-602	144	36'-2"	Str.		7,822
SF-603	114	17'-0"	1		2,911
SF-604	129	16'-4"	2		3,165
SF-605	89	37'-2"	Str.		4,968
SF-606	178	34'-10"	Str.		9,313
SF-607	89	25'-8"	Str.		3,432
SF-608	142	10'-6"	Str.		2,239
SF-609	568	7'-6"	Str.		6,399
SF-610	170	12'-3"	2		3,128
SF-611	765	9'-10"	Str.		11,299
SF-612	1 Ser. 6	6'-4" / 16'-4"	2	2'-0"	102
SF-613	15	16'-8"	2	1'-10 3/8"	376
* TOTAL WEIGHT EPOXY COATED					538
TOTAL WEIGHT NON-EPOXY COATED					85,203

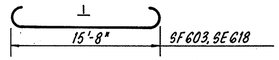

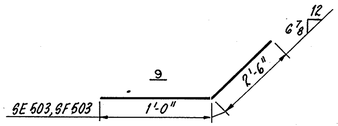

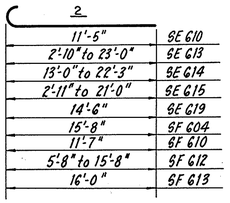

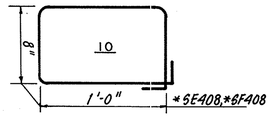

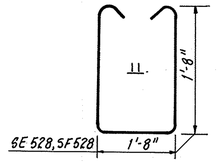

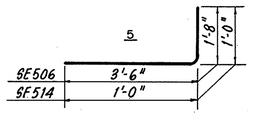

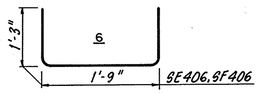

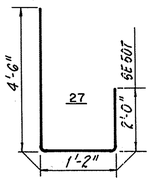

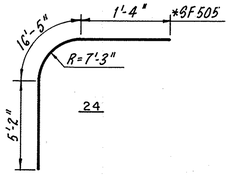

Note: For Reinforcing Steel Samples Note see Sheet 129.

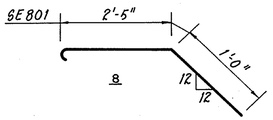

Note:
* = Indicates Epoxy Coated

EUTHENICS INC.
CONSULTING ENGINEERS
CLEVELAND OHIO

REHABILITATION OF TOWER CITY BRIDGES
PROSPECT AVE., HURON ROAD,
WEST 2ND., 3RD. & 6TH. ST. VIADUCTS
REINFORCEMENT SCHEDULE

UNITS 14 THRU 15
HURON RD.

CLEVELAND CUYAHOGA COUNTY OHIO

Made LJD	Trcd. TLW	Ckd. LJD	Rev. RAB	Revised
Date 5-12-82	Date 10-5-82	Date 10-15-82	Date 10-28-82	Sheet 125/170

MARK	NO.	LENGTH	TYPE	SER. INCR.	WEIGHT (LBS.)
UNIT 28					
SG-401	228	30'-0"	Str.		4,569
SG-402	288	12'-0"	Str.		2,309
SG-403	7	15'-0"	2		70
SG-404	12	36'-0"	Str.		289
SG-405	1 Ser. 29	3'-10" / 5'-8"	10	3/4"	92
* SG-406	286	3'-9"	10		*716
SG-407	46	3'-10"	8		118
SG-408	8	8'-6" / 14'-2"	2	9 3/4"	61
SG-409	1 Ser. 15	6'-4" / 12'-4"	Str.	5 1/8"	94
SG-501	284	30'-0"	Str.		8,886
SG-502	272	22'-2"	Str.		6,290
SG-503	74	13'-0"	Str.		1,003
SG-504	74	21'-5"	Str.		1,653
* SG-513	1	24'-10"	24		*26
SG-514	75	1'-11"	5		150
SG-528	61	5'-7"	11		355
SG-410	99	13'-2"	Str.		871
SG-411	15	12'-4"	Str.		124
SG-412	84	21'-6"	Str.		1,206
SG-413	15	20'-10"	Str.		209
SG-601	284	30'-0"	Str.		12,797
SG-602	142	15'-6"	Str.		3,306
SG-603	7	16'-0"	1		168
SG-604	88	15'-4"	2		2,027
SG-605	8	5'-4"	2		64
SG-606	1 Ser. 8	6'-3" / 13'-0"	2	11 5/8"	116
SG-607	75	15'-10"	2		1,784
SG-608	1 Ser. 7	2'-0" / 9'-6"	Str.	1'-3 1/8"	60
SG-625	137	4'-3"	2		875
SG-627	15	5'-5"	4		122
* SG-628	8	30'-0"	Str.		*360
* SG-629	4	15'-6"	Str.		*93
SG-801	2	16'-1"	2		48
SG-802	2	15'-7"	2		47
* TOTAL WEIGHT EPOXY COATED					1,195
TOTAL WEIGHT NON-EPOXY COATED					49,763

MARK	NO.	LENGTH	TYPE	SER. INCR.	WEIGHT (LBS.)
UNIT 29					
ST-401	228	30'-0"	Str.		4,569
ST-402	288	12'-0"	Str.		2,309
ST-403	15	36'-9"	Str.		368
ST-404	12	36'-0"	Str.		289
ST-405	17	5'-3"	10		60
* ST-406	286	3'-9"	10		*716
ST-407	46	3'-10"	8		118
ST-408	99	35'-3"	Str.		2,331
LIGHT PULL BOX 2 EACH					
LT-421	16	3'-5"	5		36
LT-422	20	3'-0"	Str.		40
LT-423	24	1'-10"	Str.		30
LT-424	6	6'-7"	6		26
LT-425	12	5'-7"	6		44
ST-501	292	30'-0"	Str.		9,137
ST-502	288	22'-2"	Str.		6,659
ST-503	74	37'-5	Str.		2,116
* ST-504	2	30'-0"	Str.		*63
* ST-505	1	37'-5"	Str.		*39
ST-528	64	5'-7"	11		373
ST-601	288	30'-0"	Str.		12,977
ST-602	144	15'-6"	Str.		3,352
ST-603	97	16'-0"	1		2,331
ST-604	97	15'-4"	2		2,234
ST-625	137	4'-3"	2		875
ST-627	15	5'-7"	4		126
* ST-628	8	30'-0"	Str.		*360
* ST-629	4	15'-6"	Str.		*93
* TOTAL WEIGHT EPOXY COATED					1,271
TOTAL WEIGHT NON-EPOXY COATED					50,400
UNIT 30					
SU-401	316	30'-0"	Str.		6,333
SU-402	625	12'-0"	Str.		5,010
SU-403	99	23'-9"	Str.		1,571
SU-404	2 Ser. 17	17'-5" / 35'-0"	Str.	13 1/8"	595
SU-405	17	5'-3"	10		60
* SU-406	286	3'-9"	10		*716
* SU-407	92	3'-10"	8		*236
SU-408	24	4'-0"	8		64
SU-409	41	8'-2"	65		224
SU-410	2 Ser. 7	8'-0" / 22'-0"	Str.	2'-4"	140
SU-411	2 Ser. 9	2'-6" / 17'-6"	Str.	1'-10 1/2"	120
SU-412	2 Ser. 42	8'-0" / 27'-0"	Str.	5 1/2"	982
SU-413	2 Ser. 67	3'-0" / 27'-0"	Str.	4 3/8"	1,343
SU-414	1 Ser. 12	5'-6" / 13'-6"	Str.	8 3/4"	76
SU-415	1 Ser. 5	6'-8" / 12'-0"	Str.	16"	31
SU-416	2 Ser. 4	6'-0" / 30'-0"	Str.	8'-0"	96
SU-417	2 Ser. 6	7'-0" / 44'-0"	Str.	1'-5"	204

MARK	NO.	LENGTH	TYPE	SER. INCR.	WEIGHT (LBS.)
SU-418	1 Ser. 15	16'-0" / 30'-0"	Str.	12"	230
SU-419	8	16'-0"	Str.		86
SU-420	1 Ser. 24	8'-11" / 30'-0"	Str.	11"	312
SU-421	1 Ser. 23	8'-0" / 30'-0"	Str.	12"	292
SU-422	41	6'-11"	10		190
SU-423	1 Ser. 19	4'-0" / 13'-0"	Str.	6"	108
SU-424	14	16'-0"	Str.		150
SU-425	8	8'-0"	Str.		43
SU-426	36	8'-5"	10		202
SU-427	19	3'-11"	5		50
* SU-428	122	5'-3"	10		*428
SU-429	16	6'-3"	10		67
SU-430	99	21'-5"	Str.		1,417
LIGHT PULL BOX 1 EACH					
LU-421	8	3'-5"	5		18
LU-422	10	3'-0"	Str.		20
LU-423	12	1'-10"	Str.		15
LU-424	3	6'-7"	6		13
LU-425	6	5'-7"	6		22
SU-501	557	30'-0"	Str.		17,429
SU-502	396	22'-2"	Str.		9,157
SU-503	19	14'-8"	Str.		291
SU-504	2 Ser. 27	3'-0" / 14'-0"	Str.	5 1/8"	479
SU-505	2 Ser. 17	17'-9" / 35'-4"	Str.	13 1/8"	902
SU-506	84	4'-0"	6		350
* SU-507	42	5'-0"	Str.		*219
SU-508	2 Ser. 34	1'-5" / 9'-0"	Str.	2 3/4"	370
SU-509	1 Ser. 18	3'-0" / 29'-6"	Str.	1'-6 3/4"	305
SU-510	1 Ser. 6	4'-8" / 12'-7"	Str.	1'-6 3/4"	54
SU-511	1 Ser. 12	5'-4" / 28'-0"	Str.	2'-0 3/4"	209
SU-512	1 Ser. 26	5'-0" / 28'-0"	Str.	11"	447
SU-513	84	23'-0"	Str.		2,015
SU-514	2 Ser. 18	5'-4" / 22'-0"	Str.	11 3/4"	513
SU-515	2 Ser. 8	4'-0" / 12'-0"	Str.	1'-1 3/4"	134
SU-516	33	6'-2"	Str.		212
SU-517	14	9'-4"	27		136
SU-518	14	10'-1"	27		147
SU-519	74	23'-7"	Str.		1,820
SU-520	94	19'-0"	Str.		1,863
SU-521	84	15'-0"	Str.		1,314
SU-522	2	18'-0"	Str.		38
SU-523	74	21'-1"	Str.		1,627
SU-528	43	5'-7"	11		251
SU-529	154	6'-0"	42		964
SU-530	77	3'-1"	25		248
SU-531	77	3'-5"	25		275
SU-532	8	4'-4"	9		36
SU-533	1 Ser. 8	7'-0" / 19'-3"	Str.		110
SU-534	26	6'-5"	50		174
SU-535	44	6'-0"	50		275
SU-536	10	27'-6"	Str.		287
SU-537	18	8'-0"	Str.		150
SU-538	82	5'-10"	42		499
SU-539	43	5'-3"	11		235
SU-540	43	2'-9"	6		123
SU-541	125	4'-11"	25		641
SU-542	125	2'-11"	5		381

MARK	NO.	LENGTH	TYPE	SER. INCR.	WEIGHT (LBS.)
SU-543	8	7'-7"	Str.		63
* SU-543	10	7'-7"	Str.		*79
* SU-544	16	3'-1"	6		*51
* SU-545	16	4'-3"	11		*71
* SU-546	16	1'-11"	6		*32
* SU-547	16	7'-7"	11		*127
SU-431	2 Ser. 6	30'-0" / 32'-6"	Str.	6"	251
SU-432	1 Ser. 8	23'-1" / 26'-0"	Str.	5"	131
SU-433	1 Ser. 8	33'-0" / 37'-1"	Str.	7"	187
SU-434	15	23'-9"	Str.		240
SU-601	455	30'-0"	Str.		20,502
SU-602	202	15'-6"	Str.		4,703
SU-603	16	16'-0"	1		385
SU-604	16	15'-4"	2		368
SU-605	103	16'-2"	2		2,501
SU-606	67	15'-0"	Str.		1,510
SU-607	2 Ser. 27	3'-6" / 14'-6"	Str.	5 1/8"	730
SU-608	5	33'-2"	Str.		249
SU-609	92	14'-8"	Str.		2,027
SU-610	2 Ser. 22	18'-0" / 25'-0"	Str.	4"	1,421
SU-611	1 Ser. 22	5'-5" / 15'-11"	2	6"	353
SU-612	38	25'-0"	Str.		1,427
SU-613	1 Ser. 18	3'-0" / 29'-6"	Str.	1'-6 3/4"	439
SU-614	1 Ser. 6	5'-4" / 13'-3"	Str.	1'-6 3/4"	84
SU-615	1 Ser. 12	5'-4" / 28'-0"	Str.	2'-0 3/4"	300
SU-616	1 Ser. 26	5'-0" / 37'-0"	Str.	1'-3 3/8"	820
SU-617	1 Ser. 31	5'-6" / 16'-0"	Str.	4 3/16"	501
SU-618	2 Ser. 16	6'-0" / 17'-0"	Str.	8 3/4"	553
* SU-619	2	30'-0"	Str.		*90
* SU-620	2	36'-0"	Str.		*108
* SU-621	2	9'-0"	Str.		*27
SU-801	34	5'-4"	8		484
* TOTAL WEIGHT EPOXY COATED					2,184
TOTAL WEIGHT NON-EPOXY COATED					104,774

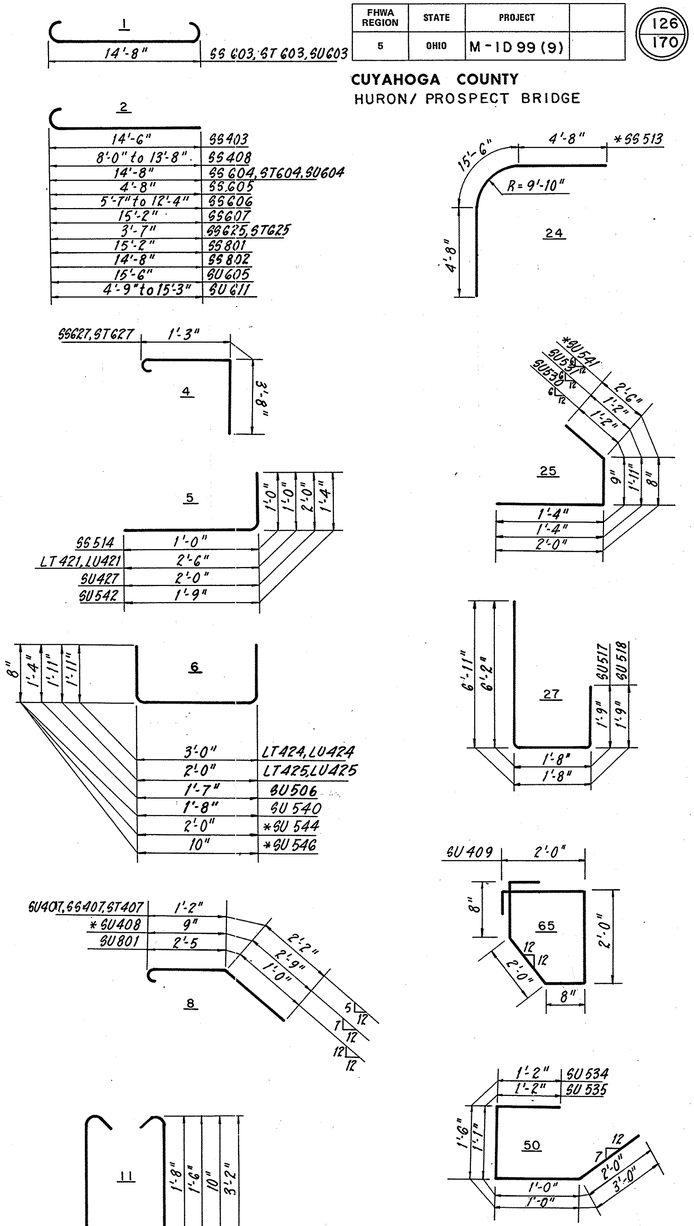

For Reinforcing Steel Samples Note See Sheet 129.

Superseded by sheet 126S, 3-26-86

FHWA REGION	STATE	PROJECT	
5	OHIO	M-ID 99 (9)	

126 / 170

CUYAHOGA COUNTY
HURON/ PROSPECT BRIDGE

EUTHENICS INC.
CONSULTING ENGINEERS
CLEVELAND OHIO

REHABILITATION OF TOWER CITY BRIDGES
PROSPECT AVE., HURON ROAD,
WEST 2 ND., 3 RD. & 6 TH. ST. VIADUCTS
REINFORCEMENT SCHEDULE

UNITS 28 THRU 30
HURON RD.

CLEVELAND	CUYAHOGA COUNTY	OHIO
Made KRD Date 5-3-82	Trcd. TLW Date 10-18-82	Ckd. LJD Date 10-19-82
Rev. RAB Date 10-25-82	Revised	Sheet 126 / 170

MARK	NO.	LENGTH	TYPE	SER. INCR.	WEIGHT (LBS.)
UNIT 30					
SU-401	369	30'-0"	Str.		7,395
SU-402	1Ser. 5	24'-5" / 33'-11"	Str.	2'-4½"	97
SU-403	15	24'-2"	Str.		242
SU-404	1Ser. 10	3'-3" / 23'-0"	Str.	2'-2 5/16"	88
SU-405	325	10'-0"	Str.		2,171
SU-406	84	22'-8"	Str.		1,272
SU-407	84	19'-5"	Str.		1,090
*SU-408	378	2'-6"	6		*631
SU-409	172	2'-6"	6		287
SU-410	126	3'-2"	6		267
SU-411	2Ser. 8	2'-6" / 17'-3"	Str.	2'-1¼"	106
SU-412	2Ser. 42	8'-10" / 27'-0"	Str.	5 5/16"	1,005
SU-413	2Ser. 48	11'-1" / 26'-10"	Str.	4"	1,216
SU-414	1Ser. 14	17'-0" / 31'-5"	Str.	1'-1 5/16"	226
SU-415	1Ser. 5	10'-2" / 11'-3"	2	3¼"	36
SU-416	2Ser. 4	4'-4" / 27'-8"	Str.	7'-9 9/16"	86
SU-417	1Ser. 4	5'-11" / 7'-11"	2	8"	18
SU-418	1Ser. 4	5'-0" / 7'-0"	Str.	8"	16
SU-419	1Ser. 5	8'-1" / 9'-10"	2	5¼"	30
*SU-424	23	3'-4"	6		*51
SU-425	23	3'-4"	6		51
SU-426	1Ser. 14	17'-10" / 32'-6"	Str.	1'-1 9/16"	235
SU-427	28	4'-10"	6		90
*SU-428	28	4'-10"	6		*90
SU-429	23	3'-6"	9		54
*SU-430	110	2'-4"	6		*171
SU-431	1Ser. 4	1'-7" / 4'-3"	Str.	10 5/8"	8
SU-432	18	3'-8"	6		44
SU-433	2Ser. 15	2'-10" / 9'-6"	Str.	5¾"	124
SU-434	15	24'-8"	Str.		247
SU-435	1Ser. 5	9'-8" / 10'-9"	Str.	3¼"	34
SU-436	2	5'-6"	Str.		7
SU-437	2Ser. 13	5'-0" / 10'-9"	Str.	5¾"	137
SU-438	2	3'-4"	Str.		4
SU-439	2	1'-3"	Str.		2
SU-440	1Ser. 4	4'-5" / 7'-10"	Str.	1'-1 11/16"	16
SU-441	1Ser. 5	7'-7" / 9'-4"	Str.	5¼"	28
SU-442	1Ser. 14	8'-9" / 30'-4"	Str.	1'-7 15/16"	183
*SU-443	2Ser. 7	8'-0" / 22'-0"	Str.	2'-4"	*140
SU-444	1Ser. 4	2'-0" / 4'-8"	Str.	10 11/16"	9
SU-445	2Ser. 5	3'-9" / 33'-2"	Str.	7'-4½"	123
*SU-446	36	8'-6"	10		*204
*SU-447	14	16'-0"	Str.		*150
*SU-448	19	3'-11"	5		*50
*SU-449	1Ser. 19	4'-0" / 13'-0"	Str.	6"	*108
SU-450	41	7'-0"	10		192
SU-452	2	19'-0"	Str.		25
SU-453	2	17'-6"	Str.		23
SU-454	4	14'-6"	Str.		39
SU-455	14	18'-6"	Str.		173
SU-456	2Ser. 6	5'-0" / 13'-0"	Str.	1'-7 3/16"	72
SU-457	4	22'-0"	Str.		59
SU-458	37	4'-3"	9		105

MARK	NO.	LENGTH	TYPE	SER. INCR.	WEIGHT (LBS.)
SU-501	522	30'-0"	Str.		16,333
SU-502	396	22'-2"	Str.		9,155
SU-503	14	13'-11"	Str.		203
SU-504	2Ser. 27	3'-5" / 15'-11"	Str.	5¾"	544
SU-505	1Ser. 14	17'-0" / 31'-5"	Str.	1'-1 5/16"	353
SU-506	52	4'-10"	6		262
SU-507	26	5'-6"	Str.		149
SU-508	2Ser. 32	1'-5" / 8'-8"	Str.	2 13/16"	337
SU-509	1Ser. 18	5'-0" / 29'-5"	Str.	1'-5¼"	323
SU-510	1Ser. 7	4'-6" / 13'-9"	Str.	1'-5 3/16"	64
SU-511	1Ser. 14	2'-6" / 28'-7"	Str.	2'-0 1/16"	227
SU-512	16	4'-0"	Str.		67
SU-513	2Ser. 55	18'-0" / 21'-9"	Str.	⅞"	2,280
SU-514	2Ser. 19	2'-7" / 21'-6"	Str.	1'-0 5/8"	477
SU-515	2Ser. 70	13'-3" / 17'-11"	Str.	13/16"	2,275
SU-516	1Ser. 48	4'-10" / 24'-5"	Str.	5"	732
SU-517	2Ser. 5	9'-0" / 12'-9"	Str.	11¼"	113
SU-518	2Ser. 4	3'-6" / 7'-10"	Str.	1'-5⅜"	47
SU-519	74	23'-0"	Str.		1,775
SU-520	74	20'-1"	Str.		1,550
SU-521	1Ser. 14	17'-10" / 32'-6"	Str.	1'-1 9/16"	367
SU-522	1Ser. 10	24'-6" / 25'-4"	Str.	1⅛"	260
*SU-523	1	30'-0"	Str.		*31
*SU-524	1	24'-6"	Str.		*26
*SU-525	1	11'-8"	Str.		*12
*SU-526	1	20'-0"	22		*21
*SU-527	1	16'-0"	22		*17
SU-528	40	5'-7"	11		233
SU-529	76	6'-4"	25		502
SU-530	140	2'-7"	5		377
SU-531	39	2'-3"	5		92
SU-532	8	4'-4"	9		36
SU-533	62	1'-11"	5		124
SU-534	1Ser. 39	4'-1" / 6'-11"	25	⅞"	224
SU-535	1Ser. 40	2'-6" / 5'-4"	25	⅞"	163
SU-536	1Ser. 18	6'-6" / 22'-9"	Str.	10 15/16"	268
SU-537	1Ser. 15	1'-9" / 6'-1"	Str.	3¾"	61
SU-538	1Ser. 5	25'-1" / 34'-7"	Str.	2'-4½"	156
SU-539	58	4'-7"	11		277
SU-540	58	2'-3"	6		136
SU-541	120	5'-1"	25		636
SU-542	120	3'-0"	5		375
*SU-543	8	7'-0"	Str.		*58
*SU-544	16	3'-1"	6		*51
SU-545	16	4'-7"	11		76
*SU-546	16	2'-1"	6		*35
*SU-547	16	7'-11	11		*132
SU-548	10	7'-0"	Str.		73
SU-549	16	19'-9"	Str.		330
SU-550	1Ser. 5	6'-8" / 17'-7"	Str.	2'-8¾"	63
SU-551	1	16'-2"	9		17
SU-552	3	17'-7"	Str.		55
SU-553	1Ser. 9	2'-1" / 4'-5"	Str.	3½"	31
SU-554	1Ser. 4	4'-9" / 8'-6"	Str.	1'-3"	28
*SU-555	16	3'-6"	Str.		*58
SU-556	32	4'-4"	6		145
SU-557	2	17'-0"	Str.		35
SU-558	10	11'-7"	Str.		121
SU-559	64	4'-8"	25		312

MARK	NO.	LENGTH	TYPE	SER. INCR.	WEIGHT (LBS.)
SU-560	1Ser. 14	1'-10" / 2'-10"	25	⅞"	34
SU-561	2	13'-2"	Str.		27
SU-562	2	20'-3"	Str.		42
SU-563	39	2'-3"	5		92
SU-564	2	19'-0"	Str.		40
SU-565	1Ser. 8	1'-10 / 2'-10"	25	1¾"	19
SU-566	1Ser. 10	3'-11" / 23'-8"	Str.	2'-2 5/16"	144
SU-567	1Ser. 14	9'-3" / 30'-10"	Str.	1'-7 15/16"	293
*SU-568	18	10'-1"	27		*189
SU-569	23	9'-4"	27		224
SU-570	28	6'-2"	Str.		180
*SU-571	2	17'-9"	Str.		*37
SU-572	1Ser. 8	9'-10" / 19'-2"	Str.	2'-0 9/16"	100
SU-601	443	30'-0"	Str.		19,962
SU-602	198	14'-6"	Str.		4,312
SU-603	28	14'-4"	2		603
SU-604	104	15'-4"	2		2,395
SU-605	52	16'-2"	Str.		1,263
SU-606	52	14'-10"	Str.		1,159
SU-607	2Ser. 27	3'-6" / 16'-0"	Str.	5 13/16"	791
*SU-608	5	16'-2"	Str.		*121
*SU-609	8	36'-4"	Str.		*437
SU-610	8	36'-4"	Str.		437
*SU-611	2	14'-8"	Str.		*44
SU-612	2	14'-8"	Str.		44
SU-613	1Ser. 18	5'-0" / 29'-5"	Str.	1'-5¼"	465
SU-614	1Ser. 7	5'-2" / 13'-9"	Str.	1'-5 3/16"	99
SU-615	1Ser. 14	2'-6" / 28'-7"	Str.	2'-0 1/16"	327
SU-616	1Ser. 8	5'-6" / 19'-10"	Str.	2'-0 9/16"	152
SU-617	14	14'-7"	Str.		307
SU-618	2Ser. 7	13'-9" / 15'-2"	2	2 13/16"	304
*SU-619	4	20'-6"	Str.		*123
SU-621	1Ser. 48	4'-11" / 24'-6"	Str.	5"	1,060
SU-622	16	20'-5"	Str.		491
SU-623	1Ser. 5	7'-4" / 18'-3"	Str.	2'-8¾"	96
SU-624	1	16'-10"	9		25
SU-625	3	18'-3"	Str.		82
SU-626	1Ser. 9	2'-9" / 4'-5"	Str.	3½"	44
SU-627	1Ser. 10	24'-7" / 25'-5"	Str.	1⅛"	376
SU-628	2Ser. 6	10'-11" / 13'-5"	2	6"	219
SU-629	2	10'-3"	2		31
SU-630	2	9'-6"	2		29
SU-631	2Ser. 5	4'-2" / 8'-0"	Str.	11½"	91
SU-632	2	2'-10"	Str.		9
SU-633	2	1'-6"	Str.		5
*SU-634	4	11'-9"	Str.		*71
*SU-635	8	30'-0"	Str.		*360
SU-636	5	16'-2"	Str.		121
*SU-637	5	16'-10"	Str.		*126
SU-638	5	16'-10"	Str.		126
SU-639	1Ser. 18	6'-7" / 22'-4"	Str.	10 15/16"	388
SU-640	1Ser. 15	1'-10" / 6'-2"	Str.	3¾"	90
*SU-641	4	8'-0"	Str.		*48
SU-801	31	5'-4"	8		441

MARK	NO.	LENGTH	TYPE	SER. INCR.	WEIGHT (LBS.)
LIGHT POLE PULL BOX					
LU-420	3	7'-7"	6		15
LU-421	10	3'-5"	5		23
LU-422	10	2'-0"	Str.		13
LU-423	10	3'-3"	Str.		22
LU-620	4	6'-2"	6		37
* TOTAL WEIGHT EPOXY COATED =					*3,592
TOTAL WEIGHT NON-EPOXY COATED =					98,220

*Indicates Epoxy Coated Bars.

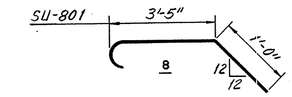

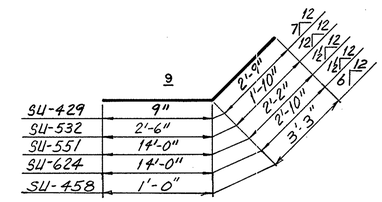

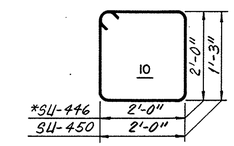

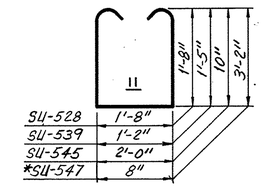

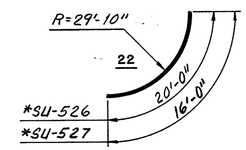

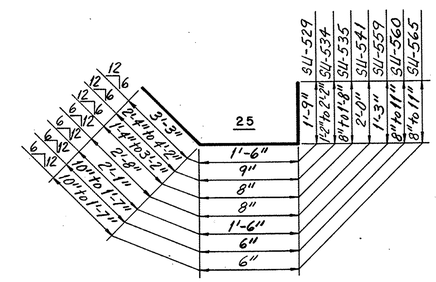

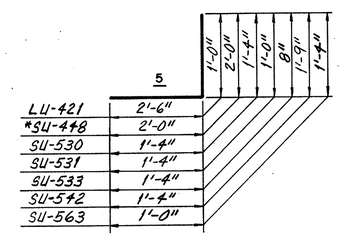

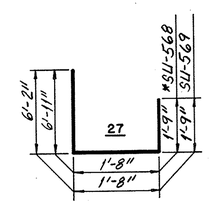

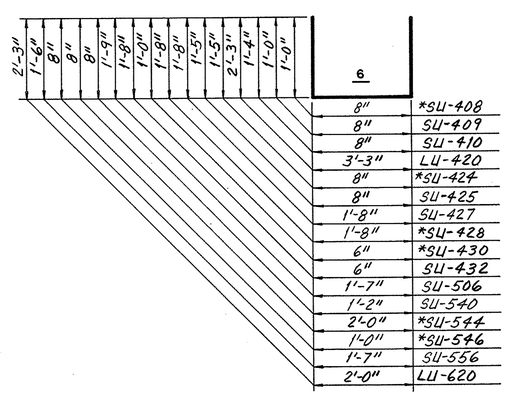

FHWA REGION	STATE	PROJECT	
5	OHIO	IX-ID99(9)	

126A
170

CUYAHOGA COUNTY
HURON/PROSPECT BRIDGE

REINFORCING STEEL SAMPLES

REFER TO CMS SECTIONS 106.03, 700, 709.01 THROUGH 709.05 AND 709.08. SUFFICIENT ADDITIONAL REINFORCING STEEL SHALL BE PROVIDED FOR SAMPLING. RANDOM SAMPLES SHALL BE REPLACED IN THE STRUCTURES BY THE ADDITIONAL STEEL, SPLICED IN ACCORDANCE WITH 509.08.

Revised JSC 3-12-86
Revised LJD 1-30-86

2	
SU-415	9'-8" to 10'-9"
SU-417	5'-5" to 7'-5"
SU-419	7'-7" to 9'-4"
SU-603	13'-8"
SU-604	14'-8"
SU-618	13'-1" to 14'-6"
SU-628	10'-3" to 12'-9"
SU-629	9'-7"
SU-630	8'-10"

Sheet added 3-26-86

EUTHENICS INC.
CONSULTING ENGINEERS
CLEVELAND OHIO

REHABILITATION OF TOWER CITY BRIDGES
PROSPECT AVE., HURON ROAD,
WEST 2 ND., 3 RD. & 6 TH. ST. VIADUCTS

REINFORCEMENT SCHEDULE

UNIT 30
HURON RD.

CLEVELAND CUYAHOGA COUNTY OHIO

Made JSC	Trcd. JSC	Ckd. LJD	Rev. RAB	Scale:
Date 2-5-86	Date 2-5-86	Date 2-5-86	Date 2-6-86	Sheet 126 A

ODOT 2-12-86 TES

FHWA REGION	STATE	PROJECT	
5	OHIO	IX-ID99(9)	

126S
170

CUYAHOGA COUNTY
HURON/PROSPECT BRIDGE

MARK	NO.	LENGTH	TYPE	SER. INCR.	WEIGHT (LBS.)
UNIT 28					
SS 401	213	30'-0"	Str.		4,269
SS 402	243	10'-0"	Str.		1,623
SS 404	114	16'-3"	Str.		1,237
SS 405	114	17'-0"	Str.		1,295
SS 406	1 Ser. 15	16'-4" / 22'-0"	Str.	4 7/8"	192
SS 407	7	14'-7"	Str.		68
*SS 408	251	2'-6"	6		*419
SS 409	148	2'-6"	6		247
SS 410	103	3'-2"	6		218
SS 411	1 Ser. 8	8'-8" / 14'-5"	Str.	9 7/8"	62
*SS 430	28	2'-4"	6		*44
SS 432	18	3'-8"	6		44
SS 501	286	30'-0"	Str.		8,949
SS 502	276	22'-2"	Str.		6,381
SS 506	74	16'-7"	Str.		1,280
SS 507	74	17'-8"	Str.		1,364
SS 508	83	2'-2"	5		188
*SS 509	2	4'-8"	Str.		*10
*SS 510	1	18'-2"	24		*19
SS 511	61	5'-7"	11		355
SS 512	16	4'-0"	Str.		67
SS 601	276	30'-0"	Str.		12,437
SS 602	138	14'-6"	Str.		3,006
SS 604	172	15'-4"	2		3,961
SS 605	1 Ser. 8	9'-2" / 14'-6"	Str.	9 1/8"	142
SS 606	1 Ser. 5	2'-8" / 7'-6"	Str.	1'-2 1/2"	38
*SS 609	4	36'-4"	Str.		*218
SS 610	4	36'-4"	Str.		218
*SS 611	4	14'-8"	Str.		*88
SS 612	2	14'-8"	Str.		44
*TOTAL WEIGHT EPOXY COATED =					*798
TOTAL WEIGHT NON-EPOXY COATED =					47,685
UNIT 29					
ST 401	228	30'-0"	Str.		4,569
ST 402	243	10'-0"	Str.		1,623
ST 403	99	36'-9"	Str.		2,430
*ST 408	251	2'-6"	6		*419
ST 409	148	2'-6"	6		247
ST 410	103	3'-2"	6		218
ST 412	15	37'-6"	Str.		376
*ST 430	28	2'-4"	6		*44
ST 432	18	3'-8"	6		44

MARK	NO.	LENGTH	TYPE	SER. INCR.	WEIGHT (LBS.)
ST 501	292	30'-0"	Str.		9,137
ST 502	288	22'-2"	Str.		6,659
ST 503	74	37'-5"	Str.		2,888
*ST 504	2	30'-0"	Str.		*63
*ST 505	1	37'-5"	Str.		*39
ST 511	64	5'-7"	11		373
ST 601	288	30'-0"	Str.		12,977
ST 602	144	14'-6"	Str.		3,136
ST 603	144	14'-4"	2		3,100
ST 604	42	15'-4"	2		967
*ST 609	4	36'-4"	Str.		*218
ST 610	4	36'-4"	Str.		218
*ST 611	4	14'-8"	Str.		*88
ST 612	2	14'-8"	Str.		44
2 LIGHT POLE PULL BOXES					
LT 420	6	7'-7"	6		30
LT 421	20	3'-5"	5		46
LT 422	20	2'-0"	Str.		27
LT 423	20	3'-3"	Str.		43
LT 620	8	6'-2"	6		74
1 LIGHT SPLICE CHAMBER					
LT 413	34	9'-0"	Str.		204
LT 414	11	6'-8"	Str.		49
LT 415	16	11'-0"	Str.		118
LT 416	32	6'-6"	5		139
LT 512	8	5'-0"	Str.		42
LT 608	11	6'-8"	Str.		110
LT 613	11	8'-3"	Str.		136
LT 614	4	3'-6"	56		21
LT 615	4	2'-11"	61		18
*TOTAL WEIGHT EPOXY COATED =					*871
TOTAL WEIGHT NON-EPOXY COATED =					50,063

*Indicates Epoxy Coated Bars.

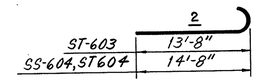

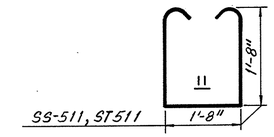

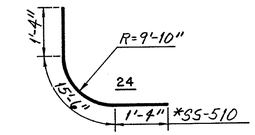

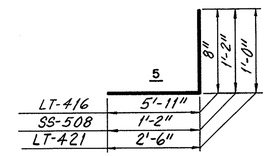

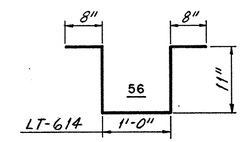

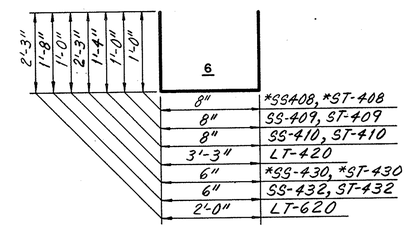

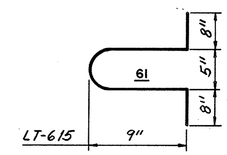

REINFORCING STEEL SAMPLES

REFER TO CMS SECTIONS 106.03, 700, 709.01 THROUGH 709.05 AND 709.08. SUFFICIENT ADDITIONAL REINFORCING STEEL SHALL BE PROVIDED FOR SAMPLING. RANDOM SAMPLES SHALL BE REPLACED IN THE STRUCTURES BY THE ADDITIONAL STEEL, SPLICED IN ACCORDANCE WITH 509.08.

Revised LJD 1-30-86

Supersedes sheet 126, 3-26-86

EUTHENICS INC.
CONSULTING ENGINEERS
CLEVELAND OHIO

REHABILITATION OF TOWER CITY BRIDGES
PROSPECT AVE., HURON ROAD,
WEST 2ND., 3RD. & 6TH. ST. VIADUCTS

REINFORCEMENT SCHEDULE

UNITS 28 & 29
HURON RD.

CLEVELAND CUYAHOGA COUNTY OHIO

Made JSC	Trcd. JSC	Ckd. LJD	Rev. RAB	Scale:
Date 1-30-86	Date 1-30-86	Date 1-30-86	Date 2-5-86	Sheet 126S

ODOT 2-12-86 TES

FHWA REGION	STATE	PROJECT	
5	OHIO	M-ID 99 (9)	

127/170

CUYAHOGA COUNTY

HURON / PROSPECT BRIDGE

MARK	NO.	LENGTH	TYPE	SER. INCR.	WEIGHT (LBS.)
UNIT 31					
SV-401	132	30'-0"	Str.		2,645
SV-402	179	8'-0"	Str.		957
SV-403	3 Ser.21	2'-6" / 29'-3"	Str.	16"	668
SV-404	12	36'-0"	Str.		289
SV-405	1 Ser.18	6'-7" / 29'-3"	Str.	16"	215
* SV-406	137	3'-9"	10		* 343
SV-407	1 Ser. 5	4'-2" / 10'-4"	Str.	18½"	24
SV-408	1 Ser. 5	1'-10" / 8'-0"	Str.	18½"	16
SV-501	232	30'-0"	Str.		7,259
SV-502	130	22'-2	Str.		3,006
SV-503	1 Ser.22	5'-8" / 32'-6"	Str.	15⅜"	438
SV-504	1 Ser.18	6'-11" / 28'-9"	Str.	15⅜"	335
SV-505	1 Ser.18	10'-3" / 32'-0"	Str.	15⅜"	397
SV-506	1 Ser.14	14'-4" / 31'-0"	Str.	14¼"	331
SV-507	1 Ser.33	15'-8" / 29'-0"	Str.	5"	769
SV-508	1 Ser.50	9'-2" / 29'-7"	Str.	5"	1,010
SV-509	1 Ser.46	3'-0" / 21'-9"	Str.	5"	594
SV-510	33	15'-0"	Str.		516
SV-516	90	6'-2"	Str.		579
SV-517	132	9'-4"	27		1,285
SV-518	10	10'-1"	27		105
SV-528	79	5'-7"	11		460
SV-601	126	30'-0"	Str.		5,678
SV-602	85	15'-6"	Str.		1,979
SV-603	1 Ser.41	12'-8" / 29'-3"	Str.	5"	1,291
SV-604	1 Ser.25	3'-3" / 13'-3"	Str.	5"	310
SV-605	1 Ser.69	3'-4" / 29'-7"	Str.	5"	1,706
SV-606	2 Ser. 9	2'-10" / 8'-3"	Str.	7¾"	150
SV-607	25	12'-0"	Str.		451
SV-625	137	4'-3"	2		875
SV-627	5	6'-0"	4		45
* SV-628	4	30'-0"	Str.		* 180
* SV-629	2	15'-6"	Str.		* 47
SV-801	90	5'-4"	8		1,282
* TOTAL WEIGHT EPOXY COATED					570
TOTAL WEIGHT NON-EPOXY COATED					35,665

MARK	NO.	LENGTH	TYPE	SER. INCR.	WEIGHT (LBS.)
PROSPECT - WEST APPROACH SLAB					
ASA-401	1 Ser. 3	8'-6" / 14'-0"	Str.	2'-9"	34
ASA-402	11	4'-2"	Str.		48
ASA-403	2	6'-3"	Str.		14
ASA-404	26	2'-3"	5		61
ASA-405	1	5'-6"	Str.		6
ASA-406	1	13'-3"	45		14
ASA-407	1	2'-3"	Str.		2
ASA-501	44	30'-0"	Str.		1,377
ASA-502	11	21'-4"	Str.		245
ASA-503	92	4'-2"	Str.		400
ASA-504	2	3'-6"	Str.		7
ASA-505	4	5'-6"	Str.		23
ASA-506	2	4'-0"	Str.		8
ASA-507	2	8'-9"	25		18
ASA-508	2	6'-6"	25		14
ASA-1001	164	5'-7"	2		3,940
* TOTAL WEIGHT EPOXY COATED					—
TOTAL WEIGHT NON-EPOXY COATED					6,218
HURON RD-WEST APPROACH SLAB					
ASC-501	22	30'-0"	Str.		688
ASC-502	11	25'-3"	Str.		290
ASC-503	55	4'-2"	Str.		239
ASC-504	4	4'-6"	Str.		19
ASC-505	2	6'-0"	Str.		13
ASC-506	2	6'-6"	25		14
ASC-507	2	9'-1"	5		19
ASC-1001	99	5'-7"	2		2,378
* TOTAL WEIGHT EPOXY COATED					—
TOTAL WEIGHT NON-EPOXY COATED					3,660
HURON RD.-EAST APPROACH SLAB					
ASD-401	47	2'-4"	5		73
ASD-402	1 Ser. 3	32'-0" / 39'-0"	Str.	3'-6"	71
ASD-403	25	4'-2"	Str.		70
ASD-404	1	6'-0"	Str.		4
ASD-501	66	30'-0"	Str.		2,065
ASD-502	123	4'-2"	Str.		535
ASD-503	1	2'-8"	Str.		3
ASD-504	2	5'-4"	9		11
ASD-505	2	3'-4"	9		7
ASD-506	1 Ser. 4	8'-0" / 12'-6"	Str.	1'-6"	43
ASD-507	1 Ser. 5	8'-0" / 12'-6"	Str.	1'-1½"	53
ASD-508	2	11'-0"	Str.		23
ASD-509	6	6'-0"	Str.		38

MARK	NO.	LENGTH	TYPE	SER. INCR.	WEIGHT (LBS.)
ASD-510	4	2'-4"	5		10
ASD-1001	214	5'-7"	2		5,141
ASD-1002	1	4'-1"	2		18
* TOTAL WEIGHT EPOXY COATED					—
TOTAL WEIGHT NON-EPOXY COATED					8,165

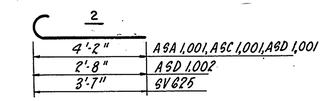

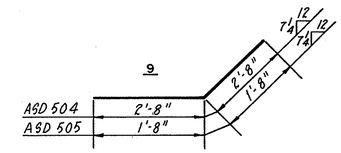

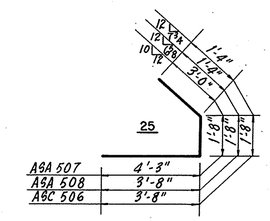

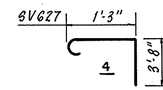

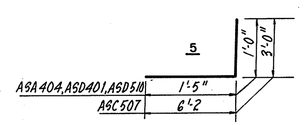

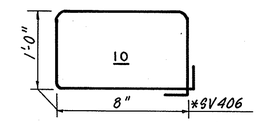

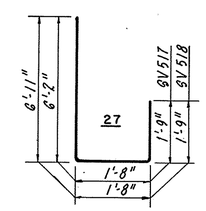

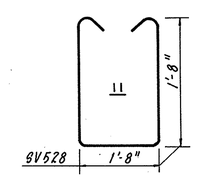

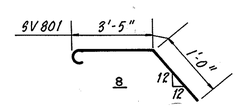

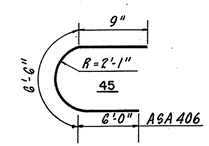

Superseded by sheet 127S, 3-26-86

EUTHENICS INC.
CONSULTING ENGINEERS
CLEVELAND OHIO

REHABILITATION OF TOWER CITY BRIDGES
PROSPECT AVE., HURON ROAD,
WEST 2ND., 3RD. & 6TH. ST. VIADUCTS
REINFORCEMENT SCHEDULE

UNIT 31 HURON RD. &
APPROACH SLABS

CLEVELAND CUYAHOGA COUNTY OHIO

Made KRD	Trcd. TLW	Ckd. LJD	Rev. RAB	Revised
Date 5-5-82	Date 10-19-82	Date 10-20-82	Date 10-25-82	Sheet 127/170

FHWA REGION	STATE	PROJECT	
5	OHIO	M-ID 99 (9)	

127S
170

CUYAHOGA COUNTY

HURON / PROSPECT BRIDGE

MARK	NO.	LENGTH	TYPE	SER, INCR.	WEIGHT (LBS.)
UNIT 31					
SV-401	132	30'-0"	Str.		2,645
SV-402	179	8'-0"	Str.		957
SV-403	3 Ser.21	2'-6" / 29'-3"	Str.	16"	668
SV-404	12	36'-0"	Str.		289
SV-405	1 Ser.18	6'-7" / 29'-3"	Str.	16"	215
* SV-406	1 Ser.5	1'-10" / 8'-0"	Str.	18½"	*16
SV-407	1 Ser.5	4'-2" / 10'-4"	Str.	18½"	24
* SV-408	102	2'-6"	6		*170
SV-409	62	2'-6"	6		104
SV-410	40	3'-2"	6		85
*SV-430	5	2'-4"	6		*8
SV-501	226	30'-0"	Str.		7,072
SV-502	126	22'-2"	Str.		2,913
SV-503	1 Ser.22	5'-9" / 32'-6"	Str.	15⅜"	438
SV-504	1 Ser.18	6'-11" / 28'-9"	Str.	15⅜"	335
SV-505	1 Ser.18	10'-3" / 32'-0"	Str.	15⅜"	397
SV-506	1 Ser.14	14'-4" / 31'-0"	Str.	15⅜"	331
SV-507	1 Ser.33	15'-8" / 29'-0"	Str.	5"	769
SV-508	1 Ser.50	9'-2" / 29'-7"	Str.	5"	1,010
SV-509	1 Ser.46	3'-0" / 21'-9"	Str.	5"	594
SV-510	33	15'-0"	Str.		516
SV-516	90	6'-2"	Str.		579
SV-517	132	9'-4"	27		1,285
SV-518	10	10'-1"	27		105
SV-528	79	5'-7"	11		460
SV-601	126	30'-0"	Str.		5,678
SV-602	85	15'-6"	Str.		1,979
SV-603	1 Ser.41	12'-8" / 29'-3"	Str.	5"	1,291
SV-604	1 Ser.25	3'-3" / 19'-3"	Str.	5"	310
SV-605	1 Ser.69	3'-4" / 29'-7"	Str.	4⅝"	1,706
SV-606	1 Ser. 9	2'-10" / 8'-3"	Str.	8⅛"	150
SV-607	25	12'-0"	Str.		451
*SV-609	4	36'-4"	Str.		*218
SV-610	4	36'-4"	Str.		218
SV-625	137	4'-3"	2		875
*SV-627	5	6'-0"	4		*45
*SV-628	1 Ser. 9	2'-10" / 8'-3"	Str.	8⅛"	*75
SV-801	90	5'-4"	8		1,282
* TOTAL WEIGHT EPOXY COATED					*532
TOTAL WEIGHT NON-EPOXY COATED					35,656

MARK	NO.	LENGTH	TYPE	SER, INCR.	WEIGHT (LBS.)
PROSPECT - WEST APPROACH SLAB					
ASA-401	1 Ser.3	8'-6" / 14'-0"	Str.	2'-9"	34
ASA-402	11	4'-2"	Str.		48
ASA-403	2	6'-3"	Str.		14
ASA-404	26	2'-3"	5		61
ASA-405	1	5'-6"	Str.		6
ASA-406	1	13'-3"	45		14
ASA-407	1	2'-3"	Str.		2
ASA-501	44	30'-0"	Str.		1,377
ASA-502	11	21'-4"	Str.		245
ASA-503	92	4'-2"	Str.		400
ASA-504	2	3'-6"	Str.		7
ASA-505	4	5'-6"	Str.		23
ASA-506	2	4'-0"	Str.		8
ASA-507	2	8'-9"	25		18
ASA-508	2	6'-6"	25		14
ASA-1001	164	5'-7"	2		3,940
* TOTAL WEIGHT EPOXY COATED					—
TOTAL WEIGHT NON-EPOXY COATED					6,218
HURON RD-WEST APPROACH SLAB					
ASC-501	22	30'-0"	Str.		688
ASC-502	11	25'-3"	Str.		290
ASC-503	55	4'-2"	Str.		239
ASC-504	4	4'-6"	Str.		19
ASC-505	2	6'-0"	Str.		13
ASC-506	2	6'-6"	25		14
ASC-507	2	9'-1"	5		19
ASC-1001	99	5'-7"	2		2,378
* TOTAL WEIGHT EPOXY COATED					—
TOTAL WEIGHT NON-EPOXY COATED					3,660
HURON RD.-EAST APPROACH SLAB					
ASD-401	47	2'-4"	5		73
ASD-402	1 Ser. 3	32'-0" / 39'-0"	Str.	3'-6"	71
ASD-403	25	4'-2"	Str.		70
ASD-404	1	6'-0"	Str.		4
ASD-501	66	30'-0"	Str.		2,065
ASD-502	123	4'-2"	Str.		535
ASD-503	1	2'-8"	Str.		3
ASD-504	2	5'-4"	9		11
ASD-505	2	3'-4"	9		7
ASD-506	1 Ser. 4	8'-0" / 12'-6"	Str.	1'-6"	43
ASD-507	1 Ser. 5	8'-0" / 12'-6"	Str.	1'-1½"	53
ASD-508	2	11'-0"	Str.		23
ASD-509	6	6'-0"	Str.		38

MARK	NO.	LENGTH	TYPE	SER, INCR.	WEIGHT (LBS.)
ASD-510	4	2'-4"	5		10
ASD-1001	214	5'-7"	2		5,141
ASD-1002	1	4'-1"	2		18
* TOTAL WEIGHT EPOXY COATED					—
TOTAL WEIGHT NON-EPOXY COATED					8,165

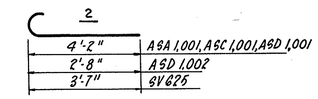

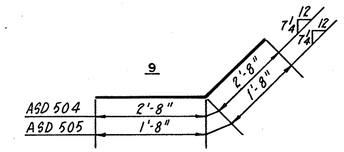

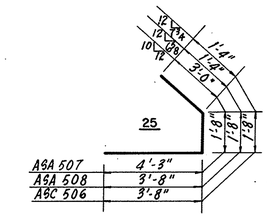

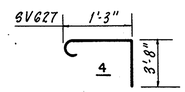

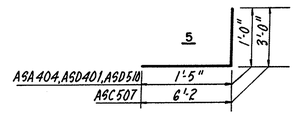

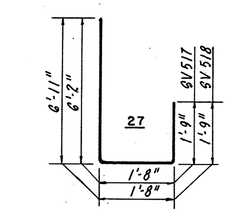

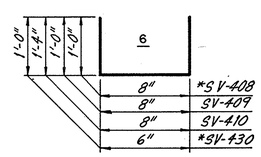

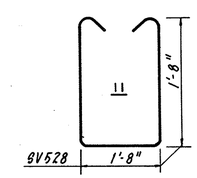

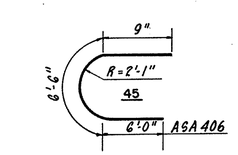

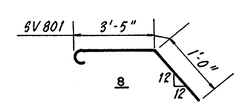

EUTHENICS INC.
CONSULTING ENGINEERS
CLEVELAND OHIO

REHABILITATION OF TOWER CITY BRIDGES
PROSPECT AVE., HURON ROAD,
WEST 2 ND., 3 RD. & 6 TH. ST. VIADUCTS
REINFORCEMENT SCHEDULE

UNIT 31 HURON RD. &
APPROACH SLABS

CLEVELAND CUYAHOGA COUNTY OHIO

Mode KRD	Trcd. TLW	Ckd. LJD	Rev. RAB	Revised LJD-1-30-86
Date 5-5-82	Date 1-29-86	Date 1-29-86	Date 1-30-86	Sheet 127S

Supersedes sheet 127, 3-26-86

ODOT 2-12-86 TES

FHWA REGION	STATE	PROJECT	
5	OHIO	M-ID 99 (9)	

128/170

CUYAHOGA COUNTY
HURON / PROSPECT BRIDGE

MARK	NO.	LENGTH	TYPE	SER. INCR.	WEIGHT (LBS.)
WEST 6TH ST. - PHASE III					
8Y-401	126	30'-0"	Str.		2,525
8Y-402	126	14'-8"	Str.		1,234
8Y-403	49	14'-10"	5		486
8Y-404	49	13'-8"	Str.		447
*8Y-405	6	2'-6"	5		*10
*8Y-406	119	3'-9"	10		*298
8Y-407	49	3'-4"	25		109
8Y-408	1 Ser.8	10'-4" / 14'-7"	5	7'4"	67
8Y-409	59	14'-2"	2		558
8Y-410	90	15'-10"	5		952
8Y-411	90	3'-7"	25		215
8Y-412	139	2'-6"	9		232
*8Y-414	66	3'-7"	10		*158
*8Y-419	48	4'-3"	10		*136
LIGHT PULL BOX 1 EACH					
LY-421	8	3'-5"	5		18
LY-422	10	3'-0"	Str.		20
LY-423	12	1'-10"	Str.		15
LY-424	3	6'-7"	6		13
LY-425	6	5'-7"	6		22
8Y-501	90	30'-0"	Str.		2,816
8Y-502	90	15'-0"	Str.		1,408
8Y-503	42	14'-0"	Str.		613
*8Y-504	139	4'-6"	57		*652
*8Y-505	139	2'-7"	6		*374
8Y-601	61	32'-2"	Str.		2,947
8Y-602	113	36'-8"	Str.		6,223
8Y-603	64	25'-8"	Str.		2,467
8Y-604	75	26'-3"	Str.		2,957
8Y-605	77	36'-0"	Str.		4,164
8Y-606	9	27'-0"	Str.		365
8Y-607	14	18'-0"	Str.		379
8Y-608	56	11'-0"	Str.		925
8Y-609	576	9'-3"	Str.		8,003
8Y-610	354	8'-0"	Str.		4,254
8Y-611	15	15'-6"	Str.		3,492
*8Y-612	6	32'-2"	Str.		*290
*8Y-613	3	36'-8"	Str.		*165
*8Y-614	3	25'-8"	Str.		*116
*8Y-615	3	23'-0"	Str.		*104
*8Y-616	4	11'-0"	Str.		*66
*8Y-617	22	8'-0"	Str.		*264
8Y-618	4	35'-0"	Str.		210
8Y-619	70	13'-2"	2		1,384
8Y-620	10	24'-10"	Str.		373
8Y-701	2	19'-6"	Str.		80
8Y-702	2	24'-10"	Str.		102

MARK	NO.	LENGTH	TYPE	SER. INCR.	WEIGHT (LBS.)
*8Y-703	4	23'-10"	Str.		*195
8Y-704	8	13'-8"	Str.		223
* TOTAL WEIGHT EPOXY COATED					2,828
TOTAL WEIGHT NON-EPOXY COATED					50,210
WEST 6TH ST. - PHASE IV					
8Z-401	210	30'-0"	Str.		4,208
8Z-402	406	14'-8"	Str.		3,978
8Z-403	67	14'-2"	2		634
*8Z-404	1 Ser.12	11'-5" / 14'-0"	Str.	12¾"	*102
*8Z-406	119	3'-9"	10		*298
*8Z-407	1 Ser. 9	2'-6" / 10'-6"	Str.	12"	*39
*8Z-408	128	15'-2"	5		*1,297
*8Z-409	1 Ser.5	11'-6" / 14'-0"	Str.	7'2"	*43
8Z-410	149	15'-10"	5		1,576
8Z-411	149	3'-7"	25		357
8Z-412	149	2'-6"	9		249
*8Z-413	14	4'-9"	6		*44
*8Z-414	75	3'-7"	10		*180
*8Z-415	129	1'-8"	5		*144
*8Z-419	48	4'-3"	10		*136
LIGHT POLE BOX 2 EACH					
LZ-421	16	3'-5"	5		37
LZ-422	20	3'-0"	Str.		40
LZ-423	24	1'-10"	Str.		29
LZ-424	6	6'-7"	6		26
LZ-425	12	5'-7"	6		45
8Z-501	149	30'-0"	Str.		4,662
8Z-502	149	15'-0"	Str.		2,331
8Z-503	149	14'-0"	Str.		2,176
*8Z-504	149	4'-6"	57		*699
*8Z-505	149	2'-7"	6		*401
8Z-506	94	3'-5"	25		335
8Z-601	64	24'-3"	Str.		2,331
8Z-602	308	36'-8"	Str.		16,962
8Z-603	50	20'-3"	Str.		1,521
*8Z-604	1 Ser.14	11'-6" / 22'-1"	5	9¾"	*353
8Z-605	14	31'-0"	Str.		652
*8Z-606	37	36'-8"	Str.		*2,038
*8Z-607	17	20'-3"	Str.		*517
8Z-608	47	11'-0"	Str.		777
8Z-609	888	9'-3"	Str.		12,337
8Z-610	577	8'-0"	Str.		6,933
8Z-611	77	37'-4"	Str.		4,318
8Z-612	79	37'-10"	Str.		4,489
*8Z-613	3	24'-3"	Str.		*109
8Z-614	15	14'-8"	9		330

MARK	NO.	LENGTH	TYPE	SER. INCR.	WEIGHT (LBS.)
*8Z-616	15	11'-0"	Str.		*248
*8Z-617	128	8'-0"	Str.		*1,538
8Z-618	2	38'-9"	Str.		116
8Z-619	74	13'-2"	2		1,463
*8Z-620	2	38'-9"	Str.		*117
8Z-701	2	19'-6"	Str.		80
8Z-702	2	24'-10"	Str.		102
*8Z-703	4	23'-10"	Str.		*195
8Z-704	8	13'-8"	Str.		224
* TOTAL WEIGHT EPOXY COATED					8,498
TOTAL WEIGHT NON-EPOXY COATED					73,318

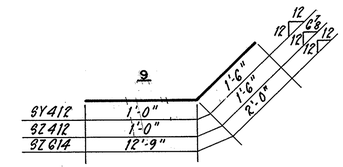

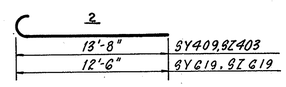

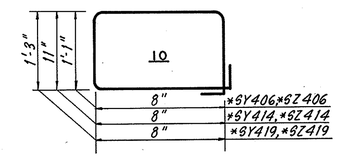

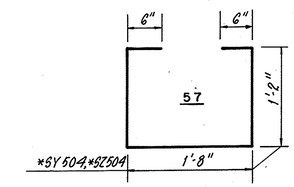

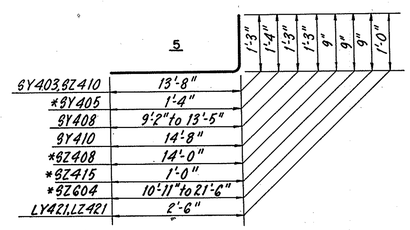

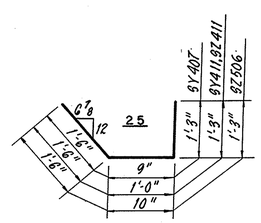

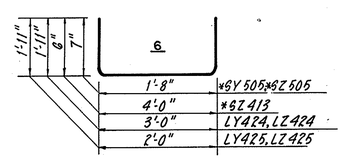

REINFORCING STEEL SAMPLES

REFER TO CMS SECTIONS 106.03, 700, 709.01 THROUGH 709.05 AND 709.08. SUFFICIENT ADDITIONAL REINFORCING STEEL SHALL BE PROVIDED FOR SAMPLING. RANDOM SAMPLES SHALL BE REPLACED IN THE STRUCTURES BY THE ADDITIONAL STEEL, SPLICED IN ACCORDANCE WITH 509.08.

Note:
* = Indicates Epoxy Coated

EUTHENICS INC.
CONSULTING ENGINEERS
CLEVELAND OHIO

REHABILITATION OF TOWER CITY BRIDGES
PROSPECT AVE., HURON ROAD,
WEST 2ND., 3RD. & 6TH. ST. VIADUCTS
REINFORCEMENT SCHEDULE
PHASE III & PHASE IV
WEST 6TH STREET

CLEVELAND CUYAHOGA COUNTY OHIO

Made KRD	Trcd. TLW	Ckd. LJD	Rev. RAB	Revised
Date 5-7-82	Date 10-20-82	Date 10-21-82	Date 10-25-82	Sheet 128 / 170

FHWA REGION	STATE	PROJECT	
5	OHIO	M-ID 99 (9)	

129/170

CUYAHOGA COUNTY
HURON / PROSPECT BRIDGE

MARK	NO.	LENGTH	TYPE	SER. INCR.	WEIGHT (LBS.)
UNIT-1					
RA-501	30	6'-5"	6		201
RA-502	2	3'-6"	Str.		7
RA-503	9	5'-2"	Str.		48
RA-504	18	6'-8"	Str.		125
RA-505	6	6'-2"	Str.		39
RA-506	3	5'-6"	Str.		17
RA-507	3	3'-1"	Str.		10
RA-508	3	3'-4"	Str.		10
RA-509	3	2'-8"	9		8
* TOTAL WEIGHT EPOXY COATED					—
TOTAL WEIGHT NON-EPOXY COATED					465
UNIT 2					
RB-501	65	6'-5"	6		435
RB-503	54	5'-2"	Str.		291
RB-504	30	6'-8"	Str.		209
RB-505	6	4'-10"	Str.		30
* TOTAL WEIGHT EPOXY COATED					—
TOTAL WEIGHT NON-EPOXY COATED					965
UNIT 3					
RC-501	63	6'-5"	6		422
RC-503	60	5'-2"	Str.		323
RC-504	18	6'-8"	Str.		125
RC-505	12	4'-10"	Str.		60
* TOTAL WEIGHT EPOXY COATED					—
TOTAL WEIGHT NON-EPOXY COATED					930
UNIT 4					
RD-502	78	3'-6"	Str.		285
RD-503	12	5'-2"	Str.		65
RD-504	6	7'-2"	Str.		45
RD-505	6	6'-2"	Str.		39
RD-506	3	4'-8"	10		15
RD-507	12	14'-5"	Str.		180
* TOTAL WEIGHT EPOXY COATED					—
TOTAL WEIGHT NON-EPOXY COATED					629

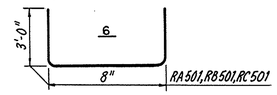

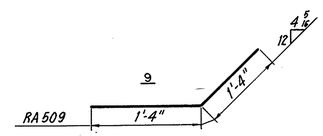

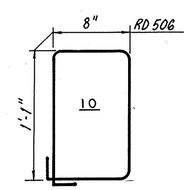

REINFORCING STEEL SAMPLES

REFER TO CMS SECTIONS 106.03, 700, 709.01 THROUGH 709.05 AND 709.08. SUFFICIENT ADDITIONAL REINFORCING STEEL SHALL BE PROVIDED FOR SAMPLING. RANDOM SAMPLES SHALL BE REPLACED IN THE STRUCTURES BY THE ADDITIONAL STEEL, SPLICED IN ACCORDANCE WITH 509.08.

EUTHENICS INC.
CONSULTING ENGINEERS
CLEVELAND OHIO

REHABILITATION OF TOWER CITY BRIDGES
PROSPECT AVE., HURON ROAD,
WEST 2ND., 3RD. & 6TH. ST. VIADUCTS
REINFORCEMENT SCHEDULE
PARAPET
UNITS 1 THRU 4
PROSPECT AVE.

CLEVELAND CUYAHOGA COUNTY OHIO

Made LJD	Trcd. TLW	Ckd. LJD	Rev. RAB	Revised
Date 8-23-82	Date 9-27-82	Date 10-17-82	Date 10-28-82	Sheet 129/170

FHWA REGION	STATE	PROJECT	
5	OHIO	M-ID 99 (9)	

130/170

CUYAHOGA COUNTY
HURON / PROSPECT BRIDGE

MARK	NO.	LENGTH	TYPE	SER. INCR.	WEIGHT (LBS.)
UNIT 14					
*RE-501	56	6'-5"	G		*375
RE-502	6	5'-2"	Str.		32
*RE-502	6	5'-2"	Str.		*32
RE-503	6	5'-5"	Str.		34
*RE-503	6	5'-5"	Str.		*34
RE-504	6	6'-0"	Str.		38
*RE-504	6	6'-0"	Str.		*38
RE-505	6	9'-3"	Str.		10
*RE-505	6	9'-3"	Str.		*10
RE-506	6	10'-0"	Str.		63
*RE-506	6	10'-0"	Str.		*63
*RE-511	45	2'-9"	G		*129
RE-512	1	8'-0"	Str.		8
*RE-512	1	8'-0"	Str.		*8
RE-513	1	30'-0"	Str.		31
*RE-513	2	30'-0"	Str.		*63
RE-514	1	37'-10"	Str.		39
*RE-514	2	37'-10"	Str.		*79
RE-515	2	4'-9"	Str.		10
*RE-515	2	4'-9"	Str.		*10
1-LIGHT BLISTER					*79 / 94
* TOTAL WEIGHT EPOXY COATED					920
TOTAL WEIGHT NON-EPOXY COATED					359
UNIT 15					
*RF-501	100	6'-5"	G		*670
RF-503	6	5'-5"	Str.		34
*RF-503	6	5'-5"	Str.		*34
RF-504	12	6'-0"	Str.		75
*RF-504	12	6'-0"	Str.		*75
RF-506	6	10'-0"	Str.		63
*RF-506	6	10'-0"	Str.		*63
RF-507	24	5'-8"	Str.		142
*RF-507	24	5'-8"	Str.		*142
RF-508	6	10'-6"	Str.		66
*RF-508	6	10'-6"	Str.		*66
*RF-511	86	2'-9"	G		*247
RF-512	10	5'-3"	Str.		55
*RF-512	10	5'-3"	Str.		*55
RF-513	4	30'-0"	Str.		125
*RF-513	8	30'-0"	Str.		*250
RF-514	1	13'-3"	Str.		14
*RF-514	2	13'-3"	Str.		*28
1-LIGHT BLISTER					*79 / 94
* TOTAL WEIGHT EPOXY COATED					1,709
TOTAL WEIGHT NON-EPOXY COATED					668

MARK	NO.	LENGTH	TYPE	SER. INCR.	WEIGHT (LBS.)
UNIT-16					
*RG-501	96	6'-5"	G		*643
RG-502	54	5'-2"	Str.		291
*RG-502	54	5'-2"	Str.		*291
RG-503	18	5'-5"	Str.		102
*RG-503	18	5'-5"	Str.		*102
*RG-511	90	2'-9"	G		*258
RG-512	11	4'-6"	Str.		52
*RG-512	11	4'-6"	Str.		*52
RG-513	4	30'-0"	Str.		125
*RG-513	8	30'-0"	Str.		*250
RG-514	1	19'-10"	Str.		21
*RG-514	2	19'-10"	Str.		*41
2-LIGHT BLISTERS					*158 / 188
* TOTAL WEIGHT EPOXY COATED					1,795
TOTAL WEIGHT NON-EPOXY COATED					779
UNIT-17					
*RH-501	96	6'-5"	G		*616
RH-502	30	5'-2"	Str.		162
*RH-502	30	5'-2"	Str.		*162
RH-507	6	5'-8"	Str.		35
*RH-507	6	5'-8"	Str.		*35
RH-509	18	5'-11"	Str.		111
*RH-509	18	5'-11"	Str.		*111
RH-510	6	6'-11"	Str.		43
*RH-510	6	6'-11"	Str.		*43
*RH-511	84	2'-9"	G		*241
RH-512	4	5'-3"	Str.		22
*RH-512	4	5'-3"	Str.		*22
RH-513	3	30'-0"	Str.		94
*RH-513	6	30'-0"	Str.		*188
RH-514	1	38'-3"	Str.		40
*RH-514	2	38'-3"	Str.		*80
RH-515	3	4'-10"	Str.		15
*RH-515	3	4'-10"	Str.		*15
RH-516	4	7'-6"	Str.		19
*RH-516	4	7'-6"	Str.		*19
2-LIGHT BLISTERS					*158 / 188
* TOTAL WEIGHT EPOXY COATED					1,690
TOTAL WEIGHT NON-EPOXY COATED					729

MARK	NO.	LENGTH	TYPE	SER. INCR.	WEIGHT (LBS.)
UNIT-18					
*RI-501	130	6'-5"	G		*870
RI-502	48	5'-2"	Str.		259
*RI-502	48	5'-2"	Str.		*259
RI-503	33	6'-8"	Str.		230
*RI-503	33	6'-8"	Str.		*230
*RI-511	111	2'-9"	G		*318
RI-512	8	12'-0"	Str.		100
*RI-512	8	12'-0"	Str.		*100
RI-513	5	30'-0"	Str.		156
*RI-513	10	30'-0"	Str.		*313
RI-514	1	21'-9"	Str.		23
*RI-514	2	21'-9"	Str.		*45
2-LIGHT BLISTERS					*158 / 188
* TOTAL WEIGHT EPOXY COATED					2,293
TOTAL WEIGHT NON-EPOXY COATED					956
UNIT-19					
*RJ-501	90	6'-5"	G		*603
RJ-502	27	5'-2"	Str.		146
*RJ-502	27	5'-2"	Str.		*146
RJ-504	15	9'-0"	Str.		141
*RJ-504	15	9'-0"	Str.		*141
RJ-505	3	10'-2"	Str.		32
*RJ-505	3	10'-2"	Str.		*32
RJ-506	3	12'-7"	Str.		39
*RJ-506	3	12'-7"	Str.		*39
*RJ-511	81	2'-9"	G		*232
RJ-512	3	12'-0"	Str.		38
*RJ-512	3	12'-0"	Str.		*38
RJ-513	3	30'-0"	Str.		94
*RJ-513	6	30'-0"	Str.		*188
RJ-514	1	33'-6"	Str.		35
*RJ-514	2	33'-6"	Str.		*70
1-LIGHT BLISTER					*79 / 94
* TOTAL WEIGHT EPOXY COATED					1,568
TOTAL WEIGHT NON-EPOXY COATED					619

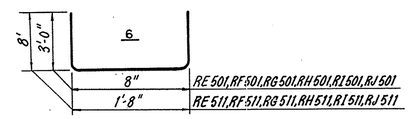

Note:
For Light Blister Bending Diagrams See Sheet 133.

REINFORCING STEEL SAMPLES

REFER TO CMS SECTIONS 106.03, 700, 709.01 THROUGH 709.05 AND 709.08. SUFFICIENT ADDITIONAL REINFORCING STEEL SHALL BE PROVIDED FOR SAMPLING. RANDOM SAMPLES SHALL BE REPLACED IN THE STRUCTURES BY THE ADDITIONAL STEEL, SPLICED IN ACCORDANCE WITH 509.08.

EUTHENICS INC.
CONSULTING ENGINEERS
CLEVELAND OHIO

REHABILITATION OF TOWER CITY BRIDGES
PROSPECT AVE., HURON ROAD,
WEST 2ND., 3RD. & 6TH. ST. VIADUCTS
REINFORCEMENT SCHEDULE
PARAPET
UNITS 14 THRU 19
HURON RD.

CLEVELAND CUYAHOGA COUNTY OHIO

Made LJD	Trcd. TLW	Ckd. LJD	Rev. RAB	Revised
Date 8-24-82	Date 9-28-82	Date 10-17-82	Date 10-28-82	Sheet 130/170

FHWA REGION	STATE	PROJECT	
5	OHIO	M-ID 99 (9)	

131/170

CUYAHOGA COUNTY
HURON/ PROSPECT BRIDGE

MARK	NO.	LENGTH	TYPE	SER. INCR.	WEIGHT (LBS.)
UNIT-20					
*RK-501	70	6'-5"	G		*469
RK-502	18	5'-2"	Str.		97
*RK-502	18	5'-2"	Str.		*97
RK-503	3	6'-8"	Str.		21
*RK-503	3	6'-8"	Str.		*21
RK-505	12	10'-2"	Str.		127
*RK-505	12	10'-2"	Str.		*127
RK-507	3	9'-9"	Str.		31
*RK-507	3	9'-9"	Str.		*31
*RK-511	62	2'-9"	G		*178
RK-512	3	12'-0"	Str.		38
*RK-512	3	12'-0"	Str.		*38
RK-513	2	30'-0"	Str.		63
*RK-513	4	30'-0"	Str.		*125
RK-514	1	34'-6'	Str.		36
*RK-514	2	34'-6"	Str.		*72
1 - LIGHT BLISTER					*79/94
* TOTAL WEIGHT EPOXY COATED					1,237
TOTAL WEIGHT NON-EPOXY COATED					507
UNIT-21					
*RL-501	79	6'-5"	G		*529
RL-502	18	5'-2"	Str.		97
*RL-502	18	5'-2"	Str.		*97
RL-508	15	10'-10"	Str.		169
*RL-508	15	10'-10"	Str.		*169
RL-509	3	13'-6"	Str.		42
*RL-509	3	13'-6"	Str.		*42
*RL-511	70	2'-9"	G		*201
RL-512	2	12'-0"	Str.		25
*RL-512	2	12-0"	Str.		*25
RL-513	3	30'-0"	Str.		94
*RL-513	6	30'-0"	Str.		*188
RL-514	1	17'-9"	Str.		19
*RL-514	2	17'-9"	Str.		*37
2 - LIGHT BLISTERS					*158/188
* TOTAL WEIGHT EPOXY COATED					1,446
TOTAL WEIGHT NON-EPOXY COATED					634

MARK	NO.	LENGTH	TYPE	SER. INCR.	WEIGHT (LBS.)
UNIT-22					
*RM-501	79	6'-5"	G		*529
RM-502	30	5'-2"	Str.		162
*RM-502	30	5'-2"	Str.		*162
RM-503	3	9'-8"	Str.		30
*RM-503	3	9'-8"	Str.		*30
RM-504	3	9'-2"	Str.		29
*RM-504	3	9'-2"	Str.		*29
RM-505	6	8'-2"	Str.		51
*RM-505	6	8'-2"	Str.		*51
RM-506	3	12'-10"	Str.		40
*RM-506	3	12'-10"	Str.		*40
*RM-511	71	2'-9"	G		*204
RM-512	4	12'-0"	Str.		50
*RM-512	4	12'-0"	Str.		*50
RM-513	3	30'-0"	Str.		94
*RM-513	6	30'-0"	Str.		*188
RM-514	1	19'-0"	Str.		20
*RM-514	2	19'-0"	Str.		*40
1 - LIGHT BLISTER					*79/94
* TOTAL WEIGHT EPOXY COATED					1,402
TOTAL WEIGHT NON-EPOXY COATED					570
UNIT-23					
*RN-501	96	6'-5"	G		*643
RN-502	24	5'-2"	Str.		129
*RN-502	24	5'-2"	Str.		*129
RN-503	18	9'-8"	Str.		182
*RN-503	18	9'-8"	Str.		*182
RN-507	6	10'-10"	Str.		68
*RN-507	6	10'-10"	Str.		*68
*RN-511	86	2'-9"	G		*247
RN-512	4	12'-0"	Str.		50
*RN-512	4	12'-0"	Str.		*50
RN-513	4	30'-0"	Str.		125
*RN-513	8	30'-0"	Str.		*250
RN-514	1	12'-4"	Str.		13
*RN-514	2	12'-4"	Str.		*26
2 - LIGHT BLISTERS					*158/188
* TOTAL WEIGHT EPOXY COATED					1,753
TOTAL WEIGHT NON-EPOXY COATED					755

MARK	NO.	LENGTH	TYPE	SER. INCR.	WEIGHT (LBS.)
UNIT-24					
*RO-501	79	6'-5"	G		*529
RO-502	30	5'-2"	Str.		162
*RO-502	30	5'-2"	Str.		*162
RO-503	3	9'-8"	Str.		30
*RO-503	3	9'-8"	Str.		*30
RO-504	3	9'-2"	Str.		29
*RO-504	3	9'-2"	Str.		*29
RO-505	6	8'-2"	Str.		51
*RO-505	6	8'-2"	Str.		*51
RO-506	3	12'-10"	Str.		40
*RO-506	3	12'-10"	Str.		*40
*RO-511	71	2'-9"	G		*204
RO-512	4	12'-0"	Str.		50
*RO-512	4	12'-0"	Str.		*50
RO-513	3	30'-0"	Str.		94
*RO-513	6	30'-0"	Str.		*188
RO-514	1	19'-0"	Str.		20
*RO-514	2	19'-0'	Str.		*40
1 - LIGHT BLISTER					*79/94
* TOTAL WEIGHT EPOXY COATED					1,402
TOTAL WEIGHT NON-EPOXY COATED					570
UNIT-25					
*RP-501	94	6'-5"	G		*629
RP-502	21	5'-2"	Str.		113
*RP-502	21	5'-2"	Str.		*113
RP-505	12	8'-2"	Str.		102
*RP-505	12	8'-2"	Str.		*102
RP-508	6	11'-2"	Str.		70
*RP-508	6	11'-2"	Str.		*70
RP-509	6	12'-4"	Str.		77
*RP-509	6	12'-4"	Str.		*77
*RP-511	82	2'-9"	G		*235
RP-512	3	12'-0"	Str.		38
*RP-512	3	12'-0"	Str.		*38
RP-513	3	30'-0"	Str.		94
*RP-513	6	30'-0"	Str.		*188
RP-514	1	35'-2"	Str.		37
*RP-514	2	35'-2"	Str.		*73
2 - LIGHT BLISTERS					*158/188
* TOTAL WEIGHT EPOXY COATED					1,683
TOTAL WEIGHT NON-EPOXY COATED					719

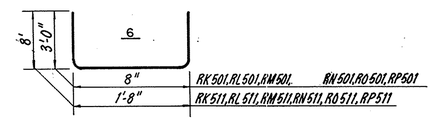

Note:
For Light Blister Bending Diagrams See Sheet 133.

REINFORCING STEEL SAMPLES

REFER TO CMS SECTIONS 106.03, 700, 709.01 THROUGH 709.05 AND 709.08. SUFFICIENT ADDITIONAL REINFORCING STEEL SHALL BE PROVIDED FOR SAMPLING. RANDOM SAMPLES SHALL BE REPLACED IN THE STRUCTURES BY THE ADDITIONAL STEEL, SPLICED IN ACCORDANCE WITH 509.08.

EUTHENICS INC.
CONSULTING ENGINEERS
CLEVELAND OHIO

REHABILITATION OF TOWER CITY BRIDGES
PROSPECT AVE., HURON ROAD,
WEST 2ND., 3RD. & 6TH. ST. VIADUCTS
REINFORCEMENT SCHEDULE
PARAPET
UNITS 20 THRU 25
HURON RD.

CLEVELAND CUYAHOGA COUNTY OHIO

Made LJD	Trcd. TLW	Ckd. LJD	Rev. RAB	Revised
Date 8-25-82	Date 9-29-82	Date 10-18-82	Date 10-28-82	Sheet 131/170

MARK	NO.	LENGTH	TYPE	SER. INCR.	WEIGHT (LBS.)
UNIT-26					
*RQ-501	111	6'-5"	G		*743
RQ-502	30	5'-2"	Str.		162
*RQ-502	30	5'-2	Str.		*162
RQ-503	6	8'-8"	Str.		54
*RQ-503	6	8'-8"	Str.		*54
RQ-504	6	9'-8"	Str.		61
*RQ-504	6	9'-8"	Str.		*61
RQ-505	3	10'-8"	Str.		33
*RQ-505	3	10'-8"	Str.		*33
RQ-506	6	14'-3"	Str.		89
*RQ-506	6	14'-3"	Str.		*89
RQ-507	3	15'-4"	Str.		48
*RQ-507	3	15'-4"	Str.		*48
*RQ-511	100	2'-9"	G		*287
RQ-512	4	12'-0"	Str.		50
*RQ-512	4	12'-0"	Str.		*50
RQ-513	4	30'-0"	Str.		125
*RQ-513	8	30'-0"	Str.		*250
RQ-514	1	33'-10"	Str.		35
*RQ-514	2	33'-10"	Str.		*71
2-LIGHT BLISTERS					*158/188
* TOTAL WEIGHT EPOXY COATED					2,006
TOTAL WEIGHT NON-EPOXY COATED					845
UNIT-27					
*RR-501	79	6'-5"	G		*529
RR-502	21	5'-2"	Str.		113
*RR-502	21	5'-2"	Str.		*113
RR-503	9	8'-8"	Str.		81
*RR-503	9	8'-8"	Str.		*81
RR-507	6	15'-4"	Str.		96
*RR-507	6	15'-4"	Str.		*96
RR-508	3	10'-4"	Str.		32
*RR-508	3	10'-4"	Str.		*32
*RR-511	73	2'-9"	G		*209
RR-512	3	12'-0"	Str.		38
*RR-512	3	12'-0"	Str.		*38
RR-513	3	30'-0"	Str.		94
*RR-513	6	30'-0"	Str.		*188
RR-514	1	22'-0"	Str.		23
*RR-514	2	22'-0"	Str.		*46
1-LIGHT BLISTER					*79/94
* TOTAL WEIGHT EPOXY COATED					1,411
TOTAL WEIGHT NON-EPOXY COATED					571

MARK	NO.	LENGTH	TYPE	SER. INCR.	WEIGHT (LBS.)
UNIT-28					
*RS-501	53	6'-5"	G		*355
RS-502	18	5'-2"	Str.		97
*RS-502	18	5'-2"	Str.		*97
RS-503	15	8'-8"	Str.		136
*RS-503	15	8'-8"	Str.		*136
RS-509	3	12'-4"	Str.		39
*RS-509	3	12'-4"	Str.		*39
*RS-511	61	2'-9"	G		*175
RS-512	3	12'-0"	Str.		38
*RS-512	3	12'-0"	Str.		*38
RS-513	2	30'-0"	Str.		63
*RS-513	4	30'-0"	Str.		*125
RS-514	1	32'-11"	Str.		34
*RS-514	2	32'-11"	Str.		*69
1-LIGHT BLISTER					*79/94
* TOTAL WEIGHT EPOXY COATED					1,113
TOTAL WEIGHT NON-EPOXY COATED					501
UNIT-29					
*RT-501	62	6'-5"	G		*415
RT-502	18	5'-2"	Str.		97
*RT-502	18	5'-2"	Str.		*97
RT-503	9	8'-8"	Str.		81
*RT-503	9	8'-8"	Str.		*81
RT-505	6	10'-8"	Str.		67
*RT-505	6	10'-8"	Str.		*67
RT-510	3	12'-9"	Str.		40
*RT-510	3	12'-9"	Str.		*40
*RT-511	64	2'-9"	G		*184
RT-512	3	12'-0"	Str.		38
*RT-512	3	12'-0"	Str.		*38
RT-513	2	30'-0"	Str.		63
*RT-513	4	30'-0"	Str.		*125
RT-514	1	37'-5"	Str.		39
*RT-514	2	37'-5"	Str.		*78
1-LIGHT BLISTER					*79/94
* TOTAL WEIGHT EPOXY COATED					1,204
TOTAL WEIGHT NON-EPOXY COATED					519

MARK	NO.	LENGTH	TYPE	SER. INCR.	WEIGHT (LBS.)
UNIT-29N					
*RX-501	56	6'-5"	G		*375
*RX-502	18	5'-2"	Str.		*97
RX-502	18	5'-2"	Str.		97
*RX-503	9	8'-8"	Str.		*81
RX-503	9	8'-8"	Str.		81
*RX-504	3	12'-9"	Str.		*40
RX-504	3	12'-9"	Str.		40
*RX-505	3	4'-8"	10		*15
* TOTAL WEIGHT EPOXY COATED					608
TOTAL WEIGHT NON-EPOXY COATED					218

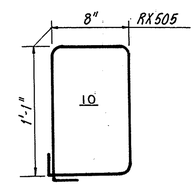

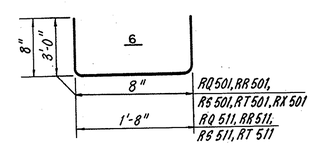

Note:
For Light Blister Bending Diagrams See Sheet 133.

REINFORCING STEEL SAMPLES

REFER TO CMS SECTIONS 106.03, 700, 709.01 THROUGH 709.05 AND 709.08. SUFFICIENT ADDITIONAL REINFORCING STEEL SHALL BE PROVIDED FOR SAMPLING. RANDOM SAMPLES SHALL BE REPLACED IN THE STRUCTURES BY THE ADDITIONAL STEEL, SPLICED IN ACCORDANCE WITH 509.08.

FHWA REGION	STATE	PROJECT	
5	OHIO	M-ID 99(9)	

132/170

CUYAHOGA COUNTY
HURON/ PROSPECT BRIDGE

EUTHENICS, INC.
CONSULTING ENGINEERS
CLEVELAND, OHIO

REHABILITATION OF TOWER CITY BRIDGES
PROSPECT AVE., HURON ROAD,
WEST 2 ND., 3 RD. & 6 TH. ST. VIADUCTS
REINFORCEMENT SCHEDULE
PARAPET
UNITS 26 THRU 29N
HURON RD.

CLEVELAND CUYAHOGA COUNTY OHIO

Made LJD	Trcd. TLW	Ckd. LJD	Rev. RAB	Revised
Date 8-26-82	Date 9-30-82	Date 10-18-82	Date 10-28-82	Sheet 132/170

FHWA REGION	STATE	PROJECT	
5	OHIO	M-ID 99 (9)	

133/170

CUYAHOGA COUNTY
HURON/ PROSPECT BRIDGE

MARK	NO.	LENGTH	TYPE	SER. INCR.	WEIGHT (LBS.)
UNIT-30					
*RU-501	83	6'-5"	6		*556
*RU-502	33	5'-2"	Str.		*178
RU-502	27	5'-2"	Str.		146
*RU-503	3	8'-8"	Str.		*27
RU-503	3	8'-8"	Str.		27
*RU-504	6	11'-7"	Str.		*72
RU-504	6	11'-7"	Str.		72
*RU-505	6	6'-5"	Str.		*42
RU-506	6	6'-0"	Str.		38
RU-507	6	7'-3"	Str.		45
*RU-508	6	3'-5"	50		*21
RU-509	6	2'-8"	9		17
*RU-511	43	2'-9"	6		*123
*RU-512	2	12'-0"	Str.		*25
RU-512	2	12'-0"	Str.		25
*RU-513	2	30'-0"	Str.		*63
RU-513	1	30'-0"	Str.		31
*RU-514	2	16'-0"	Str.		*33
RU-514	1	16'-0"	Str.		17
*RU-515	2	18'-9"	Str.		*39
RU-515	1	18'-9"	Str.		20
2 - LIGHT BLISTERS					*158/188
* TOTAL WEIGHT EPOXY COATED					1,337
TOTAL WEIGHT NON-EPOXY COATED					626
UNIT-30N					
*RY-501	69	6'-5"	6		*462
*RY-502	9	5'-2"	Str.		*48
RY-502	9	5'-2"	Str.		48
*RY-503	12	8'-8"	Str.		*109
RY-503	12	8'-8"	Str.		109
*RY-505	9	7'-6"	Str.		*70
RY-505	6	7'-6"	Str.		47
RY-506	3	7'-2"	Str.		22
*RY-507	3	8'-0"	Str.		*25
RY-508	3	7'-4"	Str.		23
RY-509	3	8'-2"	Str.		26
*RY-509	3	8'-2"	Str.		*26
RY-511	3	8'-4"	Str.		26
*RY-511	3	8'-4"	Str.		*26
*RY-512	3	3'-1"	26		*10
*RY-513	3	3'-4"	26		*10
*RY-514	1	3'-0"	Str.		*3
* TOTAL WEIGHT EPOXY COATED					789
TOTAL WEIGHT NON-EPOXY COATED					301

MARK	NO.	LENGTH	TYPE	SER. INCR.	WEIGHT (LBS.)
UNIT-31					
*RV-501	68	6'-5"	6		*455
*RV-502	30	5'-2"	Str.		*162
RV-502	30	5'-2"	Str.		162
*RV-503	15	8'-8"	Str.		*136
RV-503	15	8'-8"	Str.		136
*RV-505	3	7'-8"	Str.		*24
RV-505	3	7'-8"	Str.		24
*RV-506	3	9'-4"	Str.		*29
RV-506	3	9'-4"	Str.		29
*RV-511	79	2'-9"	6		*227
*RV-512	10	12'-0"	Str.		*125
RV-512	5	12'-0"	Str.		63
*RV-513	6	30'-0"	Str.		*188
RV-513	3	30'-0"	Str.		94
*RV-514	2	31'-3"	Str.		*65
RV-514	1	31'-3"	Str.		33
2 - LIGHT BLISTERS					*158/188
* TOTAL WEIGHT EPOXY COATED					1,569
TOTAL WEIGHT NON-EPOXY COATED					726

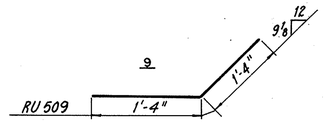

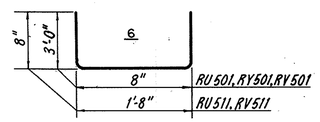

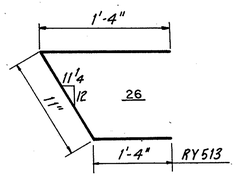

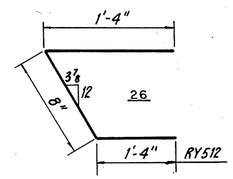

LIGHT BLISTER BENDING DIAGRAMS

MARK	NO.	LENGTH	TYPE	SER. INCR.	WEIGHT (LBS.)
*L531	6	6'-5"	6		*40
*L532	3	6'-7"	16		*21
L533	3	7'-8"	42		24
L534	3	10'-2"	42		32
*L535	4	4'-5"	6		*18
L536	4	7'-8"	57		32
L537	6	1'-0"	Str.		6
* TOTAL WEIGHT EPOXY COATED					*79
TOTAL WEIGHT NON-EPOXY COATED					94

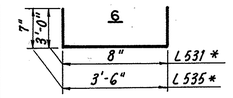

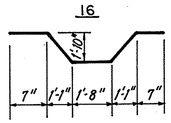

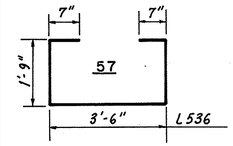

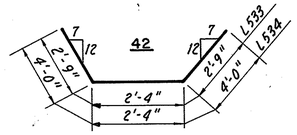

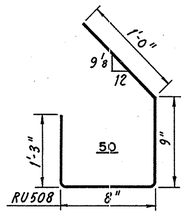

REINFORCING STEEL SAMPLES

REFER TO CMS SECTIONS 106.03, 700, 709.01 THROUGH 709.05 AND 709.08. SUFFICIENT ADDITIONAL REINFORCING STEEL SHALL BE PROVIDED FOR SAMPLING. RANDOM SAMPLES SHALL BE REPLACED IN THE STRUCTURES BY THE ADDITIONAL STEEL, SPLICED IN ACCORDANCE WITH 509.08.

EUTHENICS INC.
CONSULTING ENGINEERS
CLEVELAND OHIO

REHABILITATION OF TOWER CITY BRIDGES
PROSPECT AVE., HURON ROAD,
WEST 2ND., 3RD. & 6TH. ST. VIADUCTS
REINFORCEMENT SCHEDULE
PARAPET
UNITS 30 THRU 31
HURON RD.

CLEVELAND CUYAHOGA COUNTY OHIO

Made LJD	Trcd. TLW	Ckd. LJD	Rev. RAB	Revised
Date 8-27-82	Date 10-1-82	Date 10-19-82	Date 10-28-82	Sheet 133/170

CUYAHOGA COUNTY
HURON/PROSPECT BRIDGE

ITEM 630 - BREAKAWAY SIGN CONNECTION, AS PER PLAN

THIS WORK SHALL CONSIST OF PROVIDING A BREAKAWAY SIGN CONNECTION AS DETAILED IN THE PLANS. THE PROPOSED STRUCTURE MOUNTED SIGN SUPPORT SHALL BE PLACED IN A SLEEVE AND GROUTED. THE POST SHALL BE PAID FOR UNDER ITEM 630 - GROUND MOUNTED SUPPORTS, BY TYPE. CUTTING, SPOT WELDING, DRILLING, SETTING AND GROUTING THE POST SHALL BE PAID FOR UNDER ITEM 630 - BREAKAWAY SIGN CONNECTION, AS PER PLAN AND SHALL INCLUDE ALL LABOR, MATERIAL, EQUIPMENT AND INCIDENTALS NECESSARY TO COMPLETE THIS WORK ITEM.

ITEM 630 - SIGNS CITY OF CLEVELAND

NO PARKING SIGNS SHALL MATCH EXISTING CITY OF CLEVELAND SIGNS BY TYPE, STYLE AND COLOR AND SHALL BE ALUMINUM.

ITEM 614 MAINTENANCE OF TRAFFIC (SIGNS WITHIN PROJECT LIMITS)

SIGN CODE NO. AND SIZE

Construction Phase Number	Project Sign 96"x48"	Road Closed 48"x30"	Road Closed Local Traffic Only 60"x30"	Detour 48"x24"	Detour 48"x24"	Detour 30"x24"	Detour 30"x24"	Detour 30"x24"	Detour 30"x24"	Detour 30"x24"	Detour 24"x12"	Road Closed Ahead 36"x36"	Detour Ahead 36"x36"	Keep Left 30"x30"		One Way 36"x12"	One Way 36"x12"	Stop 30"x30"	Do Not Enter 30"x30"	Prospect Ave. 30"x8"	Huron Rd. 30"x8"				Prospect Closed West of W. 2nd. St. 48"x48"	Prospect Closed West of W. 3rd. St. 48"x48"	Huron Rd. will be Closed East of West 3rd. St. Date ____ 66"x42"	Huron Rd. Closed East of W. 3rd. St. 66"x42"	Huron Rd. will be Closed East of W. 2nd. St. Date ____ 66"x42"	Huron Rd. Closed East of W. 2nd. St. 66"x42"	Signs Flat Sheet Type Sq. Ft.
		R-75	R-76A	OC-14R	OC-14L	OC-29	OC-29R	OC-29L	OC-29 Special	OM-23		OW-120-36	OW-127-36	OC-39L-30		R-43L-36	R-43R-36	R-1-30	R-41B-30	D-14	D-14				OC(Special)	OC(Special)	OC(Special)	OC(Special)	OC(Special)	OC(Special)	
I-A & I	3	4	2	4	3	1		1		1	2	2		1				4		5											286.60
II	3	3	1	1	1		3	2	1			1						2		5					1						230.35
III	3	3	1	1		1	1					1	1			4	4	4	4							1					238.50
IV	3	5	2	1	1	1	1	1								2	2	2	2		2										242.34
V	3	3	2	1	1	1	1	1				1	1			2	2	2	2		3						1	1			310.50
VI	2	3	1	2	1	2	2	2				2	1								6								1	1	236.00

Notes: For location of maintenance of traffic signing see Sheets 4 thru 9. For maintenance of traffic Notes see Sheets 3A & Sheets 4 thru 9.

ITEM 614 - ALTERNATE ROUTE SIGNING QUANTITIES
MAINTENANCE OF TRAFFIC (OFF PROJECT)

REF. NO.	DESCRIPTION	CODE	NUMBER	UNIT	QUANTITY
1	ROAD CONSTRUCTION AHEAD	OW-128-36	1	SQ. FT.	9.0
2	ROAD WORK AHEAD	OW-134-36	3	SQ. FT.	27.0
3	DETOUR AHEAD	OW-127-36	1	SQ. FT.	9.0
4	ROAD CLOSED AHEAD	OW-120-36	1	SQ. FT.	9.0
6	WEST	OC(24"x12")	1	SQ. FT.	2.0
5,7,12,13	PROSPECT AVENUE	OC(48"x18")	5	SQ. FT.	30.0
6,8,11,14	HURON ROAD	OC(48"x18")	4	SQ. FT.	24.0
5	CLOSED WEST OF ONTARIO ST. USE HURON ROAD	SPECIAL OC(48"x48")	1	SQ. FT.	16.0
6	ROAD CLOSED TO THRU TRAFFIC	OC(48"x36")	1	SQ. FT.	12.0
7	CLOSED EAST OF WEST 3RD ST.	OC(48"x36")	3	SQ. FT.	36.0
7	CLOSED EAST OF WEST 6TH ST.	OC(48"x36")	3	SQ. FT.	36.0
7	ROAD CLOSED	OC(48"x36")	3	SQ. FT.	36.0
8	ROAD CLOSED USE PROSPECT AVE.	OC(48"x48")	2	SQ. FT.	32.0
8	ROAD CLOSED EAST OF WEST 3RD STREET	OC(48"x48")	2	SQ. FT.	32.0
8	ROAD CLOSED EAST OF WEST 2ND STREET	OC(48"x48")	2	SQ. FT.	32.0
9	HURON ROAD CLOSED WEST OF ONTARIO STREET	OC(48"x48")	2	SQ. FT.	32.0
10	HURON ROAD WILL BE CLOSED WEST OF ONTARIO (DATE)	OC(54"x54")	2	SQ. FT.	40.5
11	DETOUR	OC-29R	1	SQ. FT.	5.0
12	CLOSED WEST OF WEST 2ND ST.	OC(48"x48")	1	SQ. FT.	16.0
13	CLOSED WEST OF WEST 3RD ST.	OC(48"x48")	1	SQ. FT.	16.0
	SIGN SUPPORT ASSEMBLY POLE MOUNTED		40	EACH	40
14	CLOSED WEST OF WEST 6TH. ST.	OC(48"x 48")	1	SQ. FT.	16.0

Note: For Alternate Route Signing Plan & Sign Layouts see Sheet 3A.

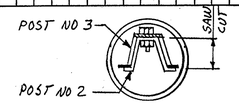

NOTE: 4"ϕ SLEEVE SHALL BE DRILLED, SET AND GROUTED INTO STRUCTURAL DECK PRIOR TO POURING THE 4" SIDEWALK SURFACE COURSE

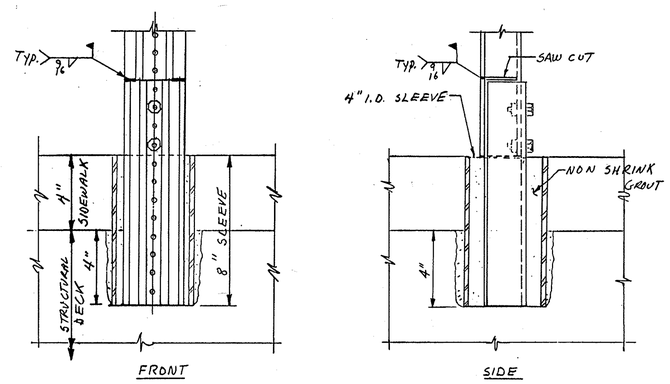

BREAKAWAY SIGN CONNECTION
No Scale

SCALE No Scale
MADE. LJD DATE 10-5-82
TRCD. TJ DATE 10-6-82
CKD. RAB DATE 10-11-82

EUTHENICS INC.
CONSULTING ENGINEERS
CLEVELAND OHIO

TEMPORARY PAVEMENT MARKINGS

GENERAL

THE CONTRACTOR SHALL FURNISH, INSTALL, MAINTAIN, AND WHEN NECESSARY, REMOVE TEMPORARY RETROREFLECTIVE PAVEMENT MARKINGS ON EXISTING, RECONSTRUCTED, RESURFACED OR TEMPORARY ROADS WITHIN THE WORK LIMITS, IN ACCORDANCE WITH THE FOLLOWING REQUIREMENTS.

THE MARKINGS SHALL BE MAINTAINED IN GOOD CONDITION DURING THE REQUIRED SERVICE PERIOD TO PROVIDE DAY AND NIGHT VISIBILITY. THE MARKINGS SHALL BE REPAIRED OR REPLACED AS DIRECTED BY THE ENGINEER TO MAINTAIN REQUIRED VISIBILITY AND/OR REFLECTIVITY AT NO ADDITIONAL COST TO THE STATE.

MATERIALS

UNLESS OTHERWISE INDICATED ON THE PLANS, TEMPORARY PAVEMENT MARKINGS MAY BE OF PAINT, PAVEMENT MARKING TAPE OR REMOVABLE PAVEMENT MARKING TAPE (TYPE R TAPE).

A. PAINT

PAINT SHALL COMPLY WITH 708.14 AND SHALL BE APPLIED IN ACCORDANCE WITH 621 EXCEPT AS MODIFIED HEREIN.

B. PAVEMENT MARKING TAPE

FLEXIBLE RETROREFLECTIVE PREFORMED PRESSURE SENSITIVE TAPE SHALL HAVE STRAIGHT EDGES AND BE FREE OF CRACKS. THE TAPE SHALL CONSIST OF PIGMENT AND FILLERS WITH SUFFICIENT BINDER AND PLASTICIZER TO RETAIN GLASS BEADS HAVING A REFRACTIVE INDEX MEETING THE MINIMUM REFLECTIVE INTENSITY STANDARD STATED IN THE MANUFACTURERS INFORMATION. THE TAPE SHALL BE FLEXOLITE "WET REFLECTIVE", 3M "SCOTCHLANE", OR AN APPROVED EQUAL.

THE GLASS BEADS SHALL BE DISTRIBUTED UNIFORMLY THROUGHOUT THE TAPE WITH SUFFICIENT SURFACE BEADS TO PROVIDE OPTIMUM REFLECTORIZATION AT ALL TIMES.

PAVEMENT MARKING TAPE SHALL COMPLY WITH THE COLOR REQUIREMENTS OF 708.14.

THE TAPE SHALL HAVE A PRECOATED ADHESIVE LAYER FOR PAVEMENT APPLICATION WITHOUT THE USE OF HEAT, SOLVENTS OR ADDITIONAL ADHESIVES. THE ADHESIVE SHALL BE SUFFICIENT TO RETAIN COMPLETE MARKINGS ON THE PAVEMENT SURFACE THROUGHOUT THE USEFUL LIFE OF THE MARKINGS.

IN ADDITION TO THE FOREGOING, ALL TEMPERATURE APPLICATION REQUIREMENTS AND OTHER APPLICABLE MANUFACTURERS MATERIAL AND APPLICATION INSTRUCTIONS SHALL BE FOLLOWED.

WHEN APPROVED BY THE ENGINEER THE CONTRACTOR MAY USE REMOVABLE PAVEMENT MARKING TAPE (TYPE R TAPE), IN LIEU OF THAT DESCRIBED ABOVE, TO FACILITATE REMOVAL OF MARKINGS.

C. REMOVABLE PAVEMENT MARKING TAPE (TYPE R TAPE)

THE MARKING MATERIAL SHALL BE A MIXTURE OF POLYMERIC MATERIALS, PIGMENTS, REINFORCING MEDIUM TO FACILITATE REMOVAL, GLASS BEADS THROUGHOUT THE PIGMENTED PORTION, AND A RETROREFLECTIVE LAYER OF GLASS BEADS BONDED TO THE TOP SURFACE.

THE TAPE SHALL BE PRECOATED WITH A PRESSURE SENSITVE ADHESIVE CAPABLE OF TEMPORARILY BONDING TO ASPHALT CONCRETE OR PORTLAND CEMENT CONCRETE PAVEMENT AT AN AMBIENT TEMPERATURE OF NOT LESS THAN 50° F AND RISING, AT A PAVEMENT TEMPERATURE OF NOT LESS THAN 50° F NOR MORE THAN 150° F, WITHOUT THE USE OF HEAT, SOLVENTS, AND ADDITIONAL ADHESIVES OR ACTIVATORS.

MATERIALS SHALL CONFORM TO THE COLOR REQUIREMENTS OF 708.14.

THE TAPE SHALL BE REMOVABLE FROM APSHALT AND PORTLAND CEMENT CONCRETE INTACT OR IN LARGE PIECES AT TEMPERATURES ABOVE 40° F WITHOUT USE OF HEAT, SOLVENTS, GRINDING, OR SANDBLASTING. REMOVAL SHALL NOT RESULT IN DAMAGE TO OR OBJECTIONABLE STAINING OF THE PAVEMENT.

GLASS BEADS SHALL BE PROVIDED IN A PROPER SIZE, QUANTITY AND DISTRIBUTION TO ASSURE OPTIMUM RETROREFLECTIVITY AS THE FILM WEARS. THE FOLLOWING INITIAL AVERAGE REFLECTANCE VALUES AT 86.0 ENTRANCE ANGLE AS MEASURED IN ACCORDANCE WITH THE TESTING PROCEDURES OF FEDERAL TEST METHOD 370 SHALL BE CERTIFIED:

	WHITE		YELLOW	
OBSERVATION ANGLE	0.2	0.5	0.2	0.5
SPECIFIC LUMINANCE	1770	1270	1310	810

$(MCD/FT^2)/FC$

THE TAPE SHALL BE 3-M COMPANY'S "STAMARK, DETOUR GRADE (SERIES 57L0, 5711, 6270, 6211)" OR AN APPROVED EQUAL.

THE CONTRACTOR SHALL FURNISH TO THE ENGINEER CERTIFICATION THAT THE MATERIAL SUPPLIED MEETS THE PROPERTIES SPECIFIED HEREIN.

LAYOUT

THE TEMPORARY MARKINGS SHALL BE ACCURATELY LAID OUT IN CONFORMANCE WITH 621.051 AND SHALL BE LOCATED IN A TRUE LINE ON THE CENTER LINE, LANE LINE, EDGE LINE, OR CHANNELIZING LINE WHERE PERMANENT MARKINGS WOULD LIE UNLESS OTHERWISE SPECIFIED IN THE PLANS.

PLACEMENT

TEMPORARY MARKINGS SHALL BE PLACED IN ACCORDANCE WITH LAYOUTS ON SHEETS 4 & 5 AND THE FOLLOWING REQUIREMENTS, UNLESS OTHERWISE SPECIFIED IN THE PLANS.

TEMPORARY MARKINGS SHALL BE COMPLETE AND IN PLACE ON ALL PAVEMENT PRIOR TO EXPOSING IT TO TRAFFIC. WHEN TEMPORARY MARKINGS ARE NO LONGER NEEDED, THEY SHALL BE REMOVED BY THE CONTRACTOR IN ACCORDANCE WITH 621.134 AND NECESSARY PAVEMENT MARKINGS INSTALLED BEFORE THE FLOW OF TRAFFIC IS CHANGED TO THE NEXT PHASE OR RETURNED TO ITS NORMAL CHANNEL.

WHERE PERMANENT PAVEMENT MARKINGS ARE CALLED FOR IN THE PLANS, THE CONTRACTOR SHALL FURNISH AND PLACE THE PERMANENT MARKINGS WITHIN 30 CALENDAR DAYS FOLLOWING COMPLETION OF ALL SURFACE COURSES IN A SINGLE ROADWAY OR PRIOR TO THE END OF THE CONSTRUCTION SEASON, WHICHEVER COMES FIRST. PERMANENT MARKINGS SHALL NOT BE PLACED OVER ANY TAPE MARKINGS.

A. CLASS I MARKINGS

CLASS I MARKINGS SHALL BE AS DEFINED IN 621, EXCEPT AS FOLLOWS:
1) LANE LINES SHALL BE 4-INCHES IN WIDTH.
2) TRANSVERSE LINES SHALL BE 8-INCHES IN WIDTH.
3) STOP LINES SHALL BE 12-INCHES IN WIDTH.
4) CROSS WALK LINES SHALL BE 8-INCHES IN WIDTH.

GORE MARKINGS SHALL CONSIST OF TWO CHANNELIZING LINES PLACED AT THE THEORETICAL OR TEMPORARY GORE OF RAMPS AND DIVERGING OR CONVERGING ROADWAYS.

THE PAINT APPLICATION RATE SHALL BE NOT LESS THAN 16 GALLONS PER MILE FOR SOLID 4-INCH LINES, 24 GALLONS PER MILE FOR SOLID 6-INCH LINES, 48 GALLONS PER MILE FOR SOLID 12-INCH LINES, AND 4 GALLONS PER MILE FOR 4-INCH DASHED LINES.

B. CLASS II MARKINGS

CENTER LINES SHALL CONSIST OF SINGLE, YELLOW 12-INCH BY 4-INCH DASHES SPACED AT A MAXIMUM OF 40-FOOT INTERVALS.

LANE LINES SHALL CONSIST OF WHITE 12-INCH BY 4-INCH DASHES SPACED AT A MAXIMUM OF 40-FOOT INTERVALS.

CHANNELIZING LINES SHALL CONSIST OF WHITE 12-INCH BY 4-INCH DASHES SPACED AT A MAXIMUM OF 20-FOOT INTERVALS.

GORE MARKINGS SHALL BE TWO CONTINUOUS, WHITE 50-FOOT BY 4-INCH LINES PLACED AT THE THEORETICAL GORE OF AN EXIT RAMP OR DIVERGING ROADWAYS.

THE PAINT APPLICATION RATE SHALL BE NOT LESS THAN 16 GALLONS PER MILE FOR GORE MARKINGS, 0.8 GALLONS PER MILE FOR CHANNELIZING LINE, AND 0.4 GALLONS PER MILE FOR LANE LINE AND CENTER LINE.

CONFLICTING MARKINGS

THE CONTRACTOR SHALL, PRIOR TO PLACING TEMPORARY MARKINGS, REMOVE ALL EXISTING CONFLICTING MARKINGS VISIBLE TO THE TRAVELING PUBLIC DURING DAYLIGHT OR NIGHTTIME HOURS IN ACCORDANCE WITH 621.134. THE COST FOR REMOVAL OF CONFLICTING MARKINGS SHALL BE INCIDENTAL TO THE VARIOUS PAY ITEMS.

METHOD OF MEASUREMENT

TEMPORARY PAVEMENT MARKINGS WILL BE MEASURED COMPLETE IN PLACE, BY CLASS AND MATERIAL, IN THE UNITS DESIGNATED. DASHED LINE QUANTITIES WILL BE THE LENGTH OF THE COMPLETED STRIPE, INCLUDING GAPS, INTERSECTIONS, AND OTHER SECTIONS OF PAVEMENT NOT NORMALLY MARKED, IN ACCORDANCE WITH 621.15.

TEMPORARY PAVEMENT MARKINGS WILL INCLUDE THE LAYOUT, APPLICATION AND REMOVAL OF THE MARKINGS, WHEN REQUIRED.

BASIS OF PAYMENT

PAYMENT FOR ACCEPTED QUANTITIES COMPLETE IN PLACE WILL BE MADE AT THE CONTRACT UNIT PRICE. PAYMENT SHALL BE FULL COMPENSATION FOR ALL MATERIALS, LABOR, INCIDENTALS AND EQUIPMENT FOR PLACEMENT, MAINTENANCE AND NECESSARY REMOVAL OF THE MARKINGS.

ITEM	UNIT	DESCRIPTION
614	MILES	TEMPORARY LANE LINES, CLASS ____, (PAINT, TAPE OR TYPE R TAPE)
614	MILES	TEMPORARY CENTER LINES, CLASS ____, (PAINT, TAPE OR TYPE R TAPE)
614	MILES/LIN. FT.	TEMPORARY CHANNELIZING LINES, CLASS ____, (PAINT, TAPE OR TYPE R TAPE)
614	MILES	TEMPORARY EDGE LINES, CLASS I, (PAINT, TAPE OR TYPE R TAPE)
614	LIN.. FT.	TEMPORARY GORE MARKING, CLASS II, (PAINT, TAPE OR TYPE R TAPE)
614	LIN. FT.	TEMPORARY STOP LINES, CLASS I, (PAINT, TAPE OR TYPE R TAPE)
614	LIN. FT.	TEMPORARY CROSSWALK LINES, CLASS I, (PAINT, TAPE OR TYPE R TAPE)
614	EACH	TEMPORARY LANE ARROWS, CLASS I, (PAINT, TAPE OR TYPE R TAPE)
614	EACH	TEMPORARY WORD "ONLY" ON PAVEMENT, 72-INCH, CLASS I, (PAINT OR TAPE)
614	LIN. FT.	TEMPORARY TRANSVERSE LINES, CLASS I, (PAINT, TAPE OR TYPE R TAPE)

621 PAVEMENT MARKING, POLYESTER, AS PER PLAN

POLYESTER PAVEMENT MARKINGS SHALL CONFORM TO 621 EXCEPT AS FOLLOWS:

ALL REFERENCES TO PAINT SHALL BE CONSIDERED TO READ POLYESTER MATERIAL.

ITEM 621.02 MATERIALS IS HEREBY DELETED-EXCEPT FOR GLASS BEAD REQUIREMENTS. IN ADDITION, PAVEMENT MARKING MATERIAL SHALL BE RETROREFLECTORIZED POLYESTER COMPOUND AS MANUFACTURED BY THE GLIDDEN-DURKEE CO., MOBIL CHEMICAL CO., DESANTIS COATING, INC., OR APPROVED EQUAL.

ITEM 621.05 APPLICATION IS HEREBY MODIFIED AS FOLLOWS:

PARAGRAPH 1 THE FIFTH SENTENCE IS DELETED AND THE FOLLOWING SUBSTITUTED:

*

PAVEMENT MARKINGS SHALL BE APPLIED ONLY WHEN THE SURFACE IS CLEAN AND DRY AND WHEN THE AIR TEMPERATURE IS ABOVE 50 F.

PARAGRAPH 4 IS HEREBY DELETED.

THE APPLICATION RATE TABLE IS HEREBY DELETED AND THE FOLLOWING SUBSTITUTED:

THE MATERIAL SHALL BE APPLIED AT THE RATE OF 16 GALLONS PER MILE FOR A SOLID LINE OF 4 INCHES IN WIDTH TO PROVIDE A UNIFORM WET FILM THICKNESS OF 15 MILS. APPLICATION RATES FOR DASHED OR DOTTED LINES AND FOR LINES WIDER THAN 4 INCHES SHALL BE PROPORTIONAL TO THE SOLID LINE RATES.

PARAGRAPH 5 IS HEREBY MODIFIED AS FOLLOWS:

GLASS BEADS SHALL BE APPLIED TO THE WET POLYESTER SO THAT THE BEADS ARE EMBEDDED AND RETAINED IN THE POLYESTER AND UNIFORMLY COVER THE POLYESTER SURFACE. THE RATE OF APPLICATION SHALL BE 15 POUNDS OF GLASS BEADS PER GALLON OF POLYESTER MATERIAL APPLIED.

PARAGRAPH 6 IS HEREBY DELETED AND THE FOLLOWING SUBSTITUTED:

THE MARKING MATERIAL SHALL DRY TO A "NO-TRACKING" CONDITION IN NOT MORE THAN FORTY-FIVE (45) MINUTES.

ITEM 621.051 LAYOUT AND PREMARKING IS MODIFIED BY THE FOLLOWING ADDITIONAL REQUIREMENTS.

(A) THE GAPS NOT MARKED AS A RESULT OF TEMPLATE USE SHALL BE FILLED WITH MARKING MATERIAL AFTER TEMPLATE REMOVAL.

(B) "T" MARKING OF CENTERLINE NO PASSING ZONES SHALL BE CONSIDERED INCIDENTAL TO APPLYING THE LINE.

ITEM 621.08 CENTER LINES IS MODIFIED BY THE FOLLOWING ADDITIONAL REQUIREMENTS: CENTER LINE MARKING SHALL ALSO INCLUDE TWO-WAY LEFT-TURN STRIPING AND THE OUTLINE OF YELLOW MARKED ISLANDS.

ITEM 621.12, 621.131 AND 621.132 RATES OF APPLICATION ARE HEREBY MODIFIED AS FOLLOWS:

POLYESTER MATERIAL SHALL BE APPLIED AT A RATE OF 1 GALLON PER 100 SQUARE FEET OF MARKING SURFACE.

ITEM 621.14 DEDUCTION FOR DEFICIENCY SHALL BE MODIFIED BY THE FOLLOWING ADDITIONAL REQUIREMENTS:

THE QUANTITY OF POLYESTER MARKING MATERIAL OR GLASS BEADS APPLIED PER UNIT OF MEASUREMENT WILL BE COMPUTED BY THE ENGINEER AT THE END OF EACH DAY'S WORK.

A DAY'S APPLIED QUANTITY OF LESS THAN 5 GALLONS OF MARKING MATERIAL MAY BE INCLUDED IN THE NEXT DAY'S APPLIED MARKINGS FOR THE PURPOSE OF COMPUTING MARKING MATERIAL AND BEAD APPLICATION RATES.

THE CONTRACTOR SHALL PROVIDE A CALIBRATED MEASURING DEVICE TO MEASURE THE POLYESTER RESIN IN THE TANKS.

THE QUANTITY OF POLYESTER MARKING MATERIAL USED SHALL BE DETERMINED BY MEASURING THE POLYESTER RESIN IN THE TANKS BEFORE AND AFTER MARKING MATERIAL IS APPLIED. THE CONTRACTOR SHALL PERMIT THE ENGINEER TO TAKE MEASUREMENTS WHENEVER REQUESTED. THE MARKING MATERIAL APPLICATION RATE SHALL BE DETERMINED BY DIVIDING THE TOTAL GALLONS USED BY THE APPROPRIATE MARKING UNIT OF MEASURE. ANY DETERMINATION OF PAY DEDUCTION RESULTING FROM SHORTAGES IN MARKING MATERIALS SHALL BE BASED ON THE MEASUREMENTS OBTAINED BY THIS METHOD. THE AMOUNT OF GLASS BEADS APPLIED SHALL BE ASCERTAINED BY THE ENGINEER BY OBSERVATION AND FROM INFORMATION SUPPLIED BY THE CONTRACTOR AS TO QUANTITY USED.

ITEM 621.16 BASIS OF PAYMENT SHALL BE MODIFIED BY ADDING THE WORDS "POLYESTER, AS PER PLAN" TO EACH ITEM DESCRIPTION.

EQUIPMENT

THE CONTRACTOR'S STRIPER SHALL BE EQUIPPED WITH AN ODOMETER GRADUATED TO 1/100 OF A MILE. THE ENGINEER SHALL DETERMINE THE DEGREE OF ACCURACY OF THE CONTRACTOR'S ODOMETER AND ESTABLISH AN ADJUSTMENT FACTOR AS MAY BE REQUIRED TO ACCURATELY DETERMINE THE PAY ITEM QUANTITIES. THE ENGINEER SHALL PERIODICALLY CHECK THE ODOMETER OPERATION TO ASSURE MAINTENANCE OF ACCURATE MEASUREMENTS.

FAILURE OF THE ODOMETER TO FUNCTION PROPERLY SHALL BE CAUSE TO STOP THE WORK UNTIL THE ODOMETER IS MADE TO FUNCTION PROPERLY. IF MEASUREMENT OF THE WORK HAS TO BE PERFORMED BY THE DEPARTMENT, THE COST OF THE DEPARTMENT LABOR AND EQUIPMENT PLUS 10 PERCENT SHALL BE DEDUCTED FROM PAYMENT DUE THE CONTRACTOR FOR THE WORK.

THE PAVEMENT MARKING EQUIPMENT SHALL BE EQUIPPED WITH A PRESSURE REGULATED AIR JET WHICH SHALL REMOVE ALL DEBRIS FROM THE PAVEMENT IN ADVANCE OF THE APPLICATOR GUN. THE AIR JET SHALL OPERATE WHEN MARKING MATERIAL IS BEING APPLIED AND SHALL BE SYNCHRONIZED WITH MARKING MATERIAL APPLICATION OR REMAIN "ON" AT ALL TIMES.

THE CONTRACTOR SHALL USE AN ACCURATE DASHING MECHANISM, CAPABLE OF BEING EASILY ADJUSTED, TO RETRACE EXISTING LANE OR CENTERLINE MARKINGS AS SPECIFIED IN THE PLANS OR AS DIRECTED BY THE ENGINEER.

PROVISIONS FOR THE DESCRIBED SPECIAL EQUIPMENT BY THE CONTRACTOR SHALL BE INCIDENTAL TO THE APPLICATION.

* POLYESTER PAVEMENT MARKINGS SHALL NOT BE APPLIED TO NEW ASPHALT CONCRETE SURFACES UNTIL AT LEAST 14 CALENDAR DAYS HAVE ELAPSED.

AUGUST 13, 1979
NOVEMBER 18, 1980
JANUARY 8, 1982

FHWA REGION	STATE	PROJECT	
5	OHIO	M-ID 99 (9)	

135 / 170

CUYAHOGA COUNTY
HURON / PROSPECT BRIDGE

SIGNING SUB-SUMMARY

Location	Side	R-1-30 30"x30"	R-2-36 36"x36"	R-31-24 24"x36"	R-10-24 24"x30"	R-38R-24 24"x30"	R-37R-24 24"x30"	R-41B-30 30"x30"	R-43R-36 36"x12"	R-43L-36 36"x12"	R-55-12* 12"x18"	R-56-12 SPECIAL 12"x18"	R-56A-12 12"x18"	R-57-12* 12"x18"	R-58-12 12"x18"	R-62-12* 12"x18"	R-67A-20* 20"x18"	R-67B-20* 20"x18"	R-67C-20* 20"x18"	R-68-12 12"x6"	R-121-24 24"x24"	W76A-30 30"x30"	SPECIAL 24"x36"	W. 2ND. ST. D-14 24"x8"	PROSPECT AVE. D-14 24"x8"	HURON RD. D-14 24"x8"	W. 6TH. ST. D-14 24"x8"	W. 3RD. ST. D-14 24"x8"	630 SIGN. DOUBLE FACED, (STREET NAME) EACH	REMOVAL OF GROUND MOUNTED SIGN SUPPORT EACH	GROUND MOUNTED SUPPORT No. 4 POST LIN. FT.	GROUND MOUNTED SUPPORT No. 2 POST LIN. FT.	GROUND MOUNTED SUPPORT No. 3 POST LIN. FT.	SIGN SUPPORT ASSEMBLY POLE MOUNTED EACH	SIGNS FLAT SHEET TYPE SQ. FT.	BREAKAWAY SIGN CONNECTION, AS PER PLAN EACH
Prospect Ave.																																				
9+90	℄						1																											1	5.00	
10+07	Rt.																	1		1						1		1		2				4	5.66	
10+20	℄						1																								1		10.17		5.00	1
10+90	℄						1																								1		10.17		5.00	1
10+94	Lt.			1									1																					2	7.50	
11+44	Rt.										1					1																	8.67		3.00	1
11+70	Lt.												1				1																	2	4.00	
11+76	℄																														1					—
11+83	℄				1																												10.17		5.00	1
12+31	Rt.																														1					
12+50	Rt.															1																		1	1.50	
12+65	Rt.																														1					
13+36	Lt.															1																		1	1.50	
14+14	Rt.										1					1																		2	3.00	
14+96	Lt.										1						1																	2	4.00	
15+70	Rt.										1					1									1			1						4	5.66	
16+10	Lt.										1				1																		10.67		3.00	1
17+16	Rt.										1					1																		2	3.00	
17+91	Rt.										1					1																	10.67		3.00	1
17+91	Lt.														1																			1	1.50	
18+63	Rt.															1																		1	1.50	
19+17	Rt.										1					1																	10.67		3.00	1
19+41	Lt.														1			1																2	4.00	
20+14	Lt.																	1				2											10.17		15.00	-1
20+57	Rt.										1			1																			10.67		3.00	1
20+88	Rt.													1																				1	1.50	
21+22	Rt.													1																				1	1.50	
21+22	Lt.												1					1																2	4.00	
22+10	Rt.										1			1																				2	3.00	
22+10	Lt.				1							1																						2	6.50	
19+41	Rt.																				1	1												2	2.66	
West 6th St.																																				
0+52	Lt.	1																															10.17		6.25	1
1+00	Lt.																	1		1														2	3.00	
1+70	Lt.																	1		1														2	3.00	
2+40	Lt.																	1		1														2	3.00	
2+40	Rt.																	1															9.17		2.50	1
2+87	Rt.	1																															10.17		6.25	1
Huron Rd.																																				
10+20	Rt.										1					1																		2	3.00	1
11+42	Lt.										1									1														2	2.00	
11+79	Rt.															1																		1	1.50	
13+37	Lt.										1									1														2	2.00	
13+39	Rt.															1																		1	1.50	
14+97	Rt.															1																		1	1.50	
16+61	Rt															1																		1	1.50	
16+62	Lt.																	1																1	2.50	
18+21	Rt.															1																		1	1.50	
19+77	Rt.															1																		1	1.50	
21+20	Rt.															1																		1	1.50	
22+66	Rt.															1																		1	1.50	
Sub-Totals - Lt.			2		1	1	1	3				13	1	3	4		3	18	3	8		6			2		1	3		1	1		2	5	60.52	61.02	56	157.48	13

* AS PER PLAN (SIGN ARROWS VARY)

SIGNING SUB-SUMMARY

Location	Side	R-1-30 30"x30"	R-2-36 36"x36"	R-31-24 24"x36"	R-10-24 24"x30"	R-38R-24 24"x30"	R-37R-24 24"x30"	R-41B-30 30"x30"	R-43R-36 36"x12"	R-43L-36 36"x12"	R-31-D SPECIAL 48"x30"	R-55-12* 12"x18"	R-56-12 SPECIAL 12"x18"	R-56A-12 12"x18"	R-57-12* 12"x18"	R-58-12 12"x18"	R-62-12* 12"x18"	R-67A-20* 20"x18"	R-67B-20* 20"x18"	R-67C-20* 20"x18"	R-68-12 12"x6"	R-121-24 24"x24"	W76A-30 30"x30"	SPECIAL 24"x36"	W. 2ND. ST. D-14 24"x8"	PROSPECT AVE. D-14 24"x8"	HURON RD. D-14 24"x8"	W. 6TH ST. D-14 24"x8"	W. 3RD. ST. D-14 24"x8"	630 SIGN. DOUBLE FACED, (STREET NAME) EACH	REMOVAL OF GROUND MOUNTED SIGN SUPPORT EACH	GROUND MOUNTED SUPPORT No. 4 POST LIN. FT.	GROUND MOUNTED SUPPORT No. 2 POST LIN. FT.	GROUND MOUNTED SUPPORT No. 3 POST LIN. FT.	SIGN SUPPORT ASSEMBLY POLE MOUNTED EACH	SIGNS FLAT SHEET TYPE SQ. FT.	BREAKAWAY SIGN CONNECTION, AS PER PLAN EACH
Huron Rd.																																				
9+25	℄																				1		1													
10+00	℄						1																									10.17			5.00	1
10+47	Lt.											1								1														2	2.00	
12+42	Lt.											1								1														2	2.00	
14+25	Lt.																		1								1	1		2				3	5.16	
15+80	Lt.																	1																1	2.50	
17+41	Lt.																	1																1	2.50	
18+00	Lt.																	1														9.17			2.50	1
19+26	Lt.																1		1														10.67		4.00	1
20+52	Lt.																	1																1	2.50	
21+92	Lt.																	1																1	2.50	
23+81	Lt.																1		1													10.67			4.00	1
25+30	Lt.																			1														1	2.50	
27+29	Lt.																1		1															2	4.00	
27+47	Rt.											1						1																1	1.50	
28+60	Lt.																	1		1														2	4.00	
29+00	Lt.		1					1																							1		11.00		10.15	1
29+20	Rt.										1	1																						2	11.50	
29+38	Lt.		1					1																							1		11.00		10.15	1
29+93	Rt.											1																						1	1.50	
30+95	Rt.			1																												10.67			6.00	1
18+38	Lt.																										1	1						2	2.66	
23+46	Lt.																							1		1								2	2.66	
24+33	Rt.																1																	1	1.50	
25+93	Rt.																1																	1	1.50	
28+24	Rt											1																						1	1.50	
30+58	Rt.											1																						1	1.50	
West 3rd. St.																																				
0+52	Lt.	1						1	1	1																					1	11.67			18.50	1
0+52	Rt.	1						1	1	1																						11.67			18.50	1
0+74	Lt.											1					1																10.67			3.00	1
0+74	Rt.											1					1																10.67			3.00	1
1+70	Lt.																1																9.17			1.50	1
1+70	Rt.																1																		1	1.50	
2+75	Lt.											1					1																10.67			3.00	1
2+75	Rt.											1					1																10.67			3.00	1
West 2ND St.																																				
0+64	Lt.											1			1																		10.67			3.00	1
0+64	Rt.											1					1																10.67			3.00	1
1+70	Lt.														1																				1	1.50	
1+70	Rt.																1																		1	1.50	
2+65	Lt.											1			1																		10.67			3.00	1
2+65	Rt.											1					1																10.67			3.00	1
2+87	Lt.	1						1	1	1																						11.67			18.50	1
2+87	Rt.	1						1	1	1																					1	11.67			18.50	1
Sub-Totals - Rt.			4	2	1		1		6	4	4	1	15			3		2	14	6	4	1	2	1		1	1		3	1	1		2	4	46.68	105.20	62.68	33	211.28	20
Sub-Totals - Lt.			2		1	1	1	3					13	1	3	4		3	17	4	8				2		1	3		1	1		2	5		60.52	61.02	56	157.48	13
Totals			6	2	2	1	2	3	6	4	4	1	28	1	3	7		5	31	10	12	1	6	1	2	1	2	3	3	2	2		4	9	46.68	165.72	123.70	89	368.76	33

* AS PER PLAN (SIGN ARROWS VARY)

SCALE
MADE. REM DATE 11-1-82
TRCD. REM DATE 11-1-82
CKD. WJO DATE 11-2-82

EUTHENICS INC.
CONSULTING ENGINEERS
CLEVELAND OHIO

FHWA REGION	STATE	PROJECT	
5	OHIO	M-ID 99 (9)	

136
170

CUYAHOGA COUNTY
HURON / PROSPECT BRIDGE

① 4" CENTER LINES, DOUBLE SOLID

Station From	Station To	Side	Calculations	Lin. Ft.
Prospect Ave.				
11+90	15+02	℄	1502 - 1190	312
15+86	19+31	℄	1931 - 1586	345
20+17	22+53	℄	2253 - 2017	236
Huron Road				
10+01	13+49	℄	1349 - 1001	348
14+09	18+31	℄	1831 - 1409	422
18+90	22+74	℄	2274 - 1890	384
23+34	28+35	℄	2835 - 2334	501
29+05	30+42	℄	3042 - 2905	137
West 6th Street				
0+48	1+38	℄	138 - 48	90
2+40	2+95	℄	295 - 240	55
			Total Lin. Ft	2,830
			Miles	0.54

② 4" LANE LINES

Station From	Station To	Side	Calculations	Lin. Ft.
Prospect Ave.				
10+20	22+53	Lt.	(2253-1020) x 2	2466
9+70	22+53	Rt.	(2253-9+70) x 2	2566
Huron Road				
8+80	30+00	Lt.	(3000-880) x 2	4240
9+00	30+70	Rt.	(3070-900) x 2	4340
			Total Lin. Ft.	13,612
			Miles	2.58

③ 4" EDGE LINES, YELLOW

Station From	Station To	Side	Calculations	Lin. Ft.
Prospect Ave.				
9+90	10+35	℄	1035 - 990	45
10+80	11+90	℄	1190 - 1080	110
Huron Road				
9+15	10+00	℄	1000 - 915	85
			Total Lin. Ft.	240
			Miles	0.05

④ 6" CROSSWALK LINES

Station From	Station To	Side	Calculations	Lin. Ft.
Prospect Ave.				
9+80		℄	126 x 2	252
10+72		℄	108 x 2	216
20+10		℄	68 x 2	136
22+65		℄	68 x 2	136
Huron Road				
29+05	29+35	Lt.	30 x 2	60
29+10	29+39	Lt.	30 x 2	60
			Total Lin. Ft.	660

④ 6" CROSSWALK LINES

Station From	Station To	Side	Calculations	Lin. Ft.
West 6th Street				
0+39		℄	40 x 2	80
3+00		℄	40 x 2	80
West 3rd Street				
0+39		℄	35 x 2	70
3+00		℄	35 x 2	70
West 2nd Street				
0+39		℄	35 x 2	70
3+00		℄	35 x 2	70
			Total Lin. Ft.	440

8" CHANNALIZING LINE

Station From	Station To	Side	Calculations	Lin. Ft.
Huron Road				
29+90	30+90	Rt.	100 x 1	100
			Total Lin. Ft.	100

⑤ 18" STOP LINES

Station From	Station To	Side	Calculations	Lin. Ft.
Prospect Ave.				
10+20		Lt.	45 x 1	45
10+60		Lt.	15 x 1	15
10+80		Lt.	34 x 1	34
22+55		Rt.	34 x 1	34
Huron Road				
9+35		Lt.	60 x 1	60
30+60		Rt.	74 x 1	74
			Total Lin. Ft.	262

⑤ 18" STOP LINES

Station From	Station To	Side	Calculations	Lin. Ft.
West 6th Street				
0+45		Lt.		
2+93		Rt.	40 x 1	40
West 3rd. Street				
0+45		℄	35 x 1	35
West 2nd Street				
2+93		℄	35 x 1	35
			Total Lin. Ft.	110

⑥ LANE ARROWS, AS PER PLAN

Station From	Station To	Side	Calculations	Each
Huron Rd.				
30+30		Rt.	1	1
30+45		Rt.	1	1
30+65		Rt.	1	1
			Total Each	3

WORD "ONLY" ON PAVEMENT

Station From	Station To	Side	Calculations	Each
Huron Road				
30+10		Rt.	1	1
30+30		Rt.	1	1
			Total Each	2

SCALE
MADE. LJO DATE 10-27-82
TRCD. RCM DATE 11-1-82
CKD. RAB DATE 11-2-82

EUTHENICS INC.
CONSULTING ENGINEERS
CLEVELAND OHIO

GENERAL SUMMARY

FED. RD. DIVISION	STATE	PROJECT	
2	OHIO		

136A
170

CUYAHOGA COUNTY
HURON / PROSPECT BRIDGE

ITEM	SHEET NUMBER (NORMAL PARTICIPATION) 4A	5	135	136	ITEM	QUANT.	UNIT	DESCRIPTION
								TRAFFIC CONTROL
630			4		630	4	EACH	SIGN, DOUBLE FACED (STREET NAME)
630			9		630	9	EACH	REMOVAL OF GROUND MOUNTED SIGN SUPPORT
630			47		630	47	L.F.	GROUND MOUNTED SUPPORT Nº 4 POST
630			124		630	124	L.F.	GROUND MOUNTED SUPPORT Nº 3 POST
630			166		630	166	L.F.	GROUND MOUNTED SUPPORT Nº 2 POST
630			89		630	89	EACH	SIGN SUPPORT ASSEMBLY POLE MOUNTED
630			369		630	369	SQ. FT.	SIGNS, FLAT SHEET
630			33		630	33	EACH	BREAKAWAY SIGN CONNECTION, AS PER PLAN
614	0.05	0.05			614	0.10	MILES	TEMPORARY CENTERLINE, CLASS I, PAINT
621				0.54	621	0.54	MILES	CENTERLINES, POLYESTER, AS PER PLAN
621				2.58	621	2.58	MILES	LANE LINES, 4 IN., POLYESTER, AS PER PLAN
621				0.05	621	0.05	MILES	EDGE LINES, POLYESTER, AS PER PLAN
621				1100	621	1100	L.F.	CROSSWALK LINES, POLYESTER, AS PER PLAN
621				100	621	100	L.F.	CHANNELIZING LINES, POLYESTER, AS PER PLAN
621				372	621	372	L.F.	STOP LINES, POLYESTER, AS PER PLAN
621				3	621	3	EACH	LANE ARROW, POLYESTER, AS PER PLAN
621				2	621	2	EACH	WORD "ONLY" ON PAVEMENT 72 IN. POLYESTER, AS PER PLAN

FHWA REGION	STATE	PROJECT	
5	OHIO	M-ID 99 (9)	

137/170

CUYAHOGA COUNTY
HURON / PROSPECT BRIDGE

Note: Placement of parking signs should be set at an angle of not less than 30° nor more than 45° with a line parallel to the flow of traffic so as to be visible to approaching traffic.

PARKING SIGN PLACEMENT DETAIL

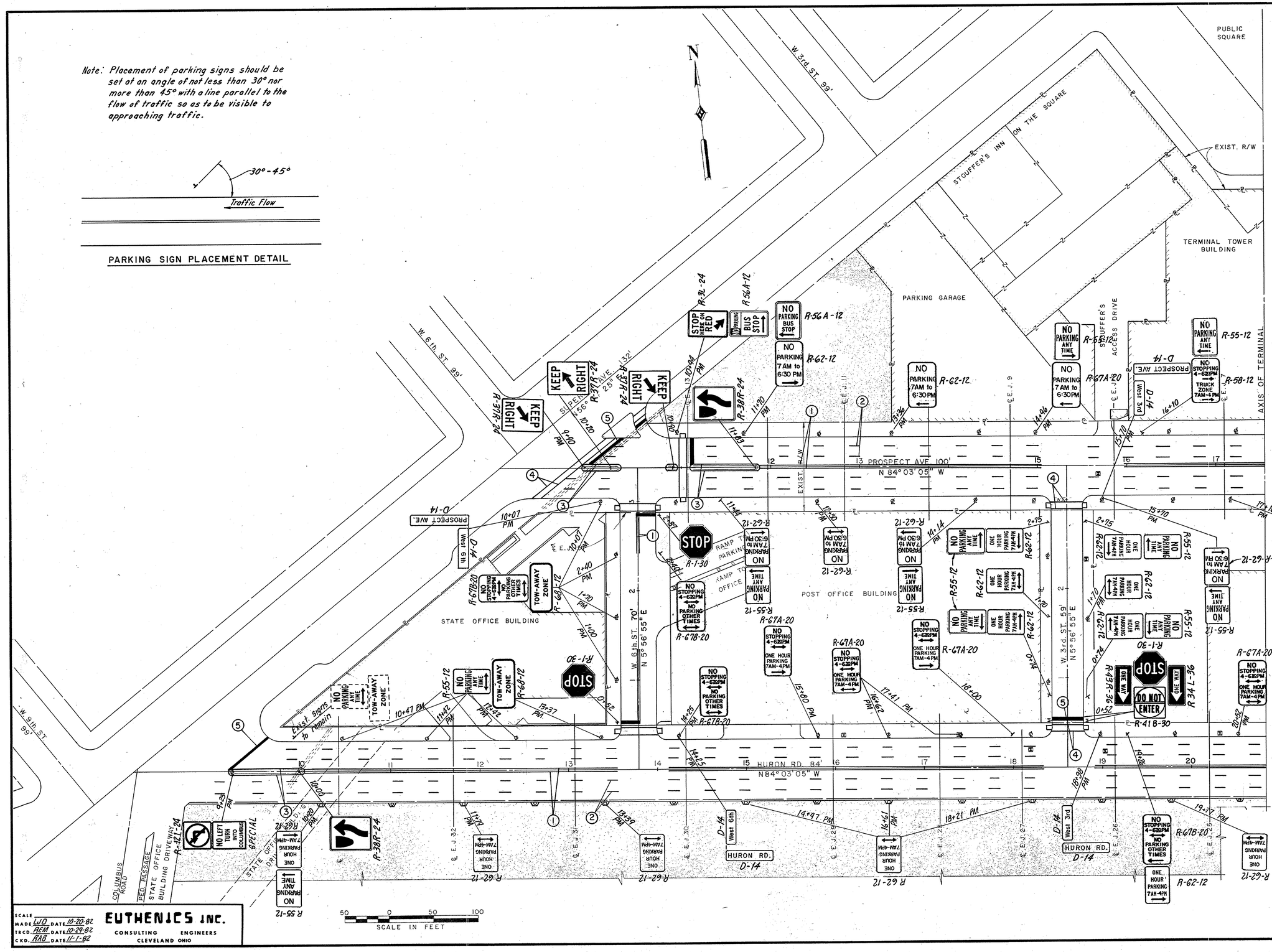

LEGEND

1. CENTER LINES, DOUBLE SOLID
2. 4" LANE LINES
3. EDGE LINES, YELLOW
4. CROSS WALK LINES
5. STOP LINES

PM POLE MOUNTED

SCALE
MADE LJO DATE 10-20-82
TRCD. REM DATE 10-29-82
CKD. RAB DATE 11-1-82

EUTHENICS INC.
CONSULTING ENGINEERS
CLEVELAND OHIO

SIGNING AND STRIPING PLAN

FHWA REGION	STATE	PROJECT	
5	OHIO	M-ID 99 (9)	

138
170

CUYAHOGA COUNTY
HURON / PROSPECT BRIDGE

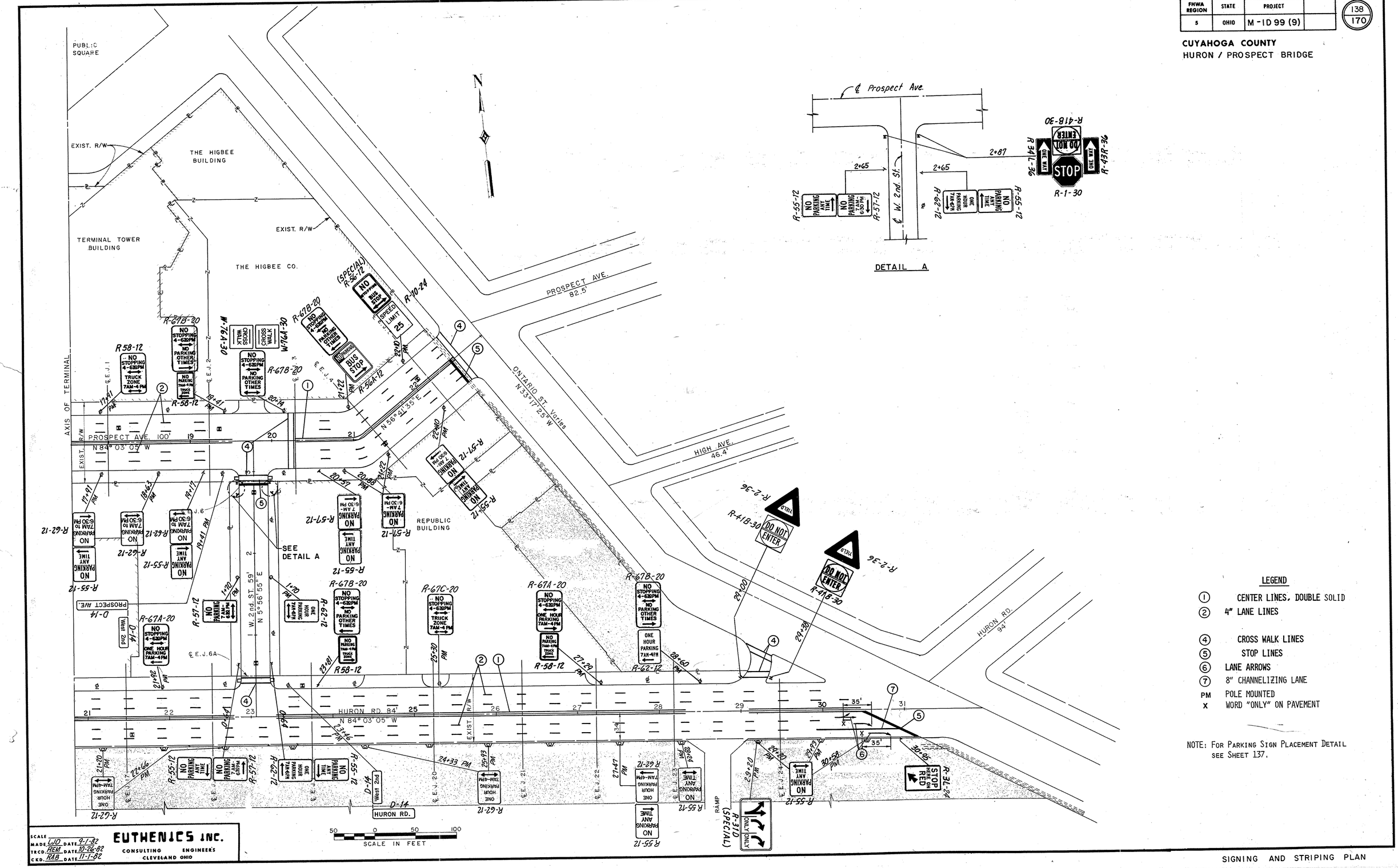

SIGNING AND STRIPING PLAN

FHWA REGION	STATE	PROJECT	
5	OHIO	M-ID99(9)	

139
170

CUYAHOGA COUNTY
HURON/PROSPECT BRIDGE

LEGEND

- • Light Pole Locations
- ○ Manhole Locations
- △ Fire Hydrant Locations
- Type B Exposed Aggregate Concrete
- Type A Scored Grey Concrete
- Type C Patterned Concrete

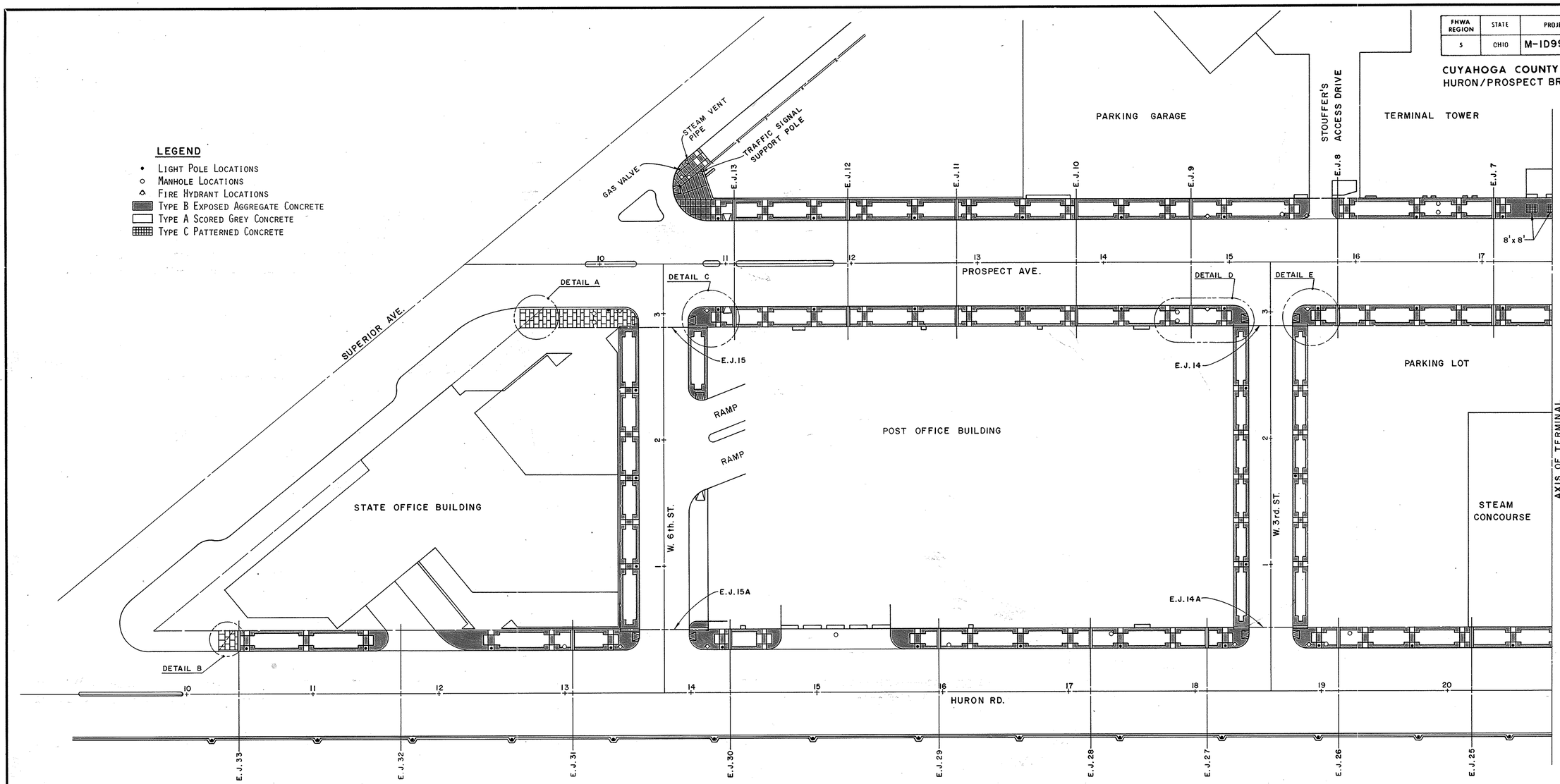

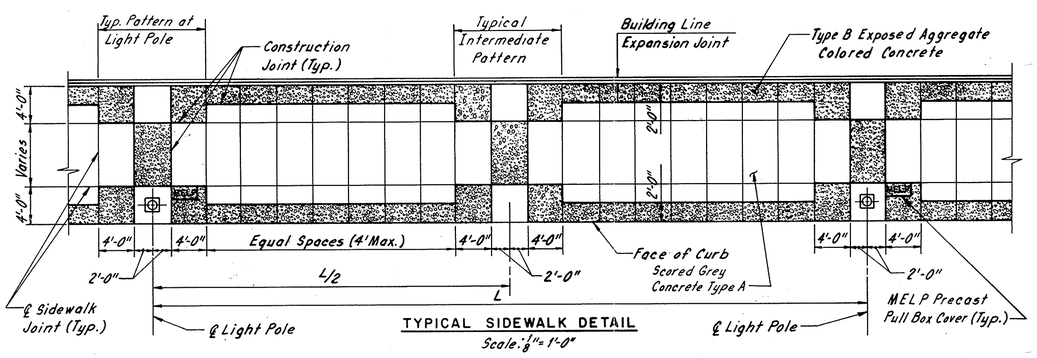

TYPICAL SIDEWALK DETAIL
Scale: 1/8" = 1'-0"

NOTES:

1. For Details A, B, C & D see Sheet 141.
2. For Detail E see Sheet 142.
3. The pattern shall be centered on the Proposed Light Pole locations.
4. Treatment for Type C Patterned Concrete are centered on the Doorways.
5. The Intermediate Patterns shall be adjusted to miss Manhole Covers. Patterns that are less than four feet from the Expansion Joint Blockouts shall be adjusted to abut the Expansion Joint Blockout.
6. Driveway Aprons shall be Type A Scored Grey Concrete.
7. For additional Sidewalk information see General Notes Sheet 14.

EUTHENICS INC.
CONSULTING ENGINEERS
CLEVELAND OHIO

REHABILITATION OF TOWER CITY BRIDGES
PROSPECT AVE., HURON ROAD,
WEST 2ND., 3RD. & 6TH. ST. VIADUCTS

SIDEWALK SURFACE PLAN

CLEVELAND CUYAHOGA COUNTY OHIO

Made JSC	Trcd. JSC	Ckd. LJD	Rev. RAB	Scale: 1" = 4'-0"
Date 2-15-83	Date 2-16-83	Date 2-21-83	Date 3-9-83	Sheet 139/170

FHWA REGION	STATE	PROJECT	
5	OHIO	M-ID99(9)	

140/170

CUYAHOGA COUNTY
HURON/PROSPECT BRIDGE

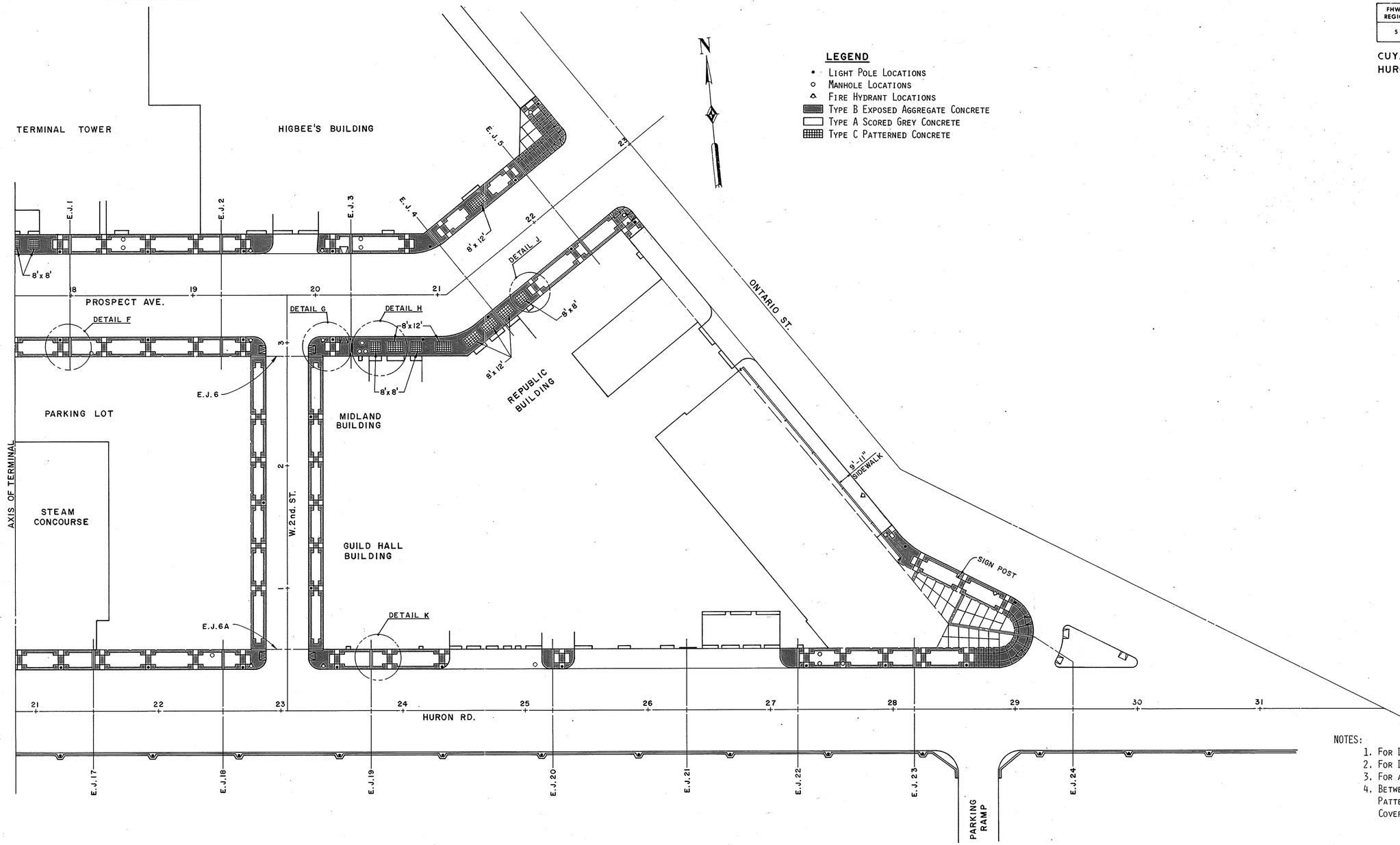

LEGEND

- Light Pole Locations
- Manhole Locations
- Fire Hydrant Locations
- Type B Exposed Aggregate Concrete
- Type A Scored Grey Concrete
- Type C Patterned Concrete

NOTES:

1. For Details F,G & H see Sheet 142.
2. For Details J & K see Sheet 143.
3. For additional notes see Sheet 139.
4. Between E.J. 22 & E.J. 23 the Intermediate Pattern shall be centered on the Manhole Cover.

EUTHENICS INC.
CONSULTING ENGINEERS
CLEVELAND OHIO

REHABILITATION OF TOWER CITY BRIDGES
PROSPECT AVE., HURON ROAD,
WEST 2ND., 3RD. & 6TH. ST. VIADUCTS

SIDEWALK SURFACE PLAN

CLEVELAND CUYAHOGA COUNTY OHIO

Mode JSC	Trcd. JSC	Ckd. LJD	Rev. RAB	Scale: 1"=40'
Date 2-16-83	Date 2-17-83	Date 2-21-83	Date 3-9-83	Sheet 140 / 170

FHWA REGION	STATE	PROJECT	
5	OHIO	M-ID99(9)	

141/170

CUYAHOGA COUNTY
HURON / PROSPECT BRIDGE

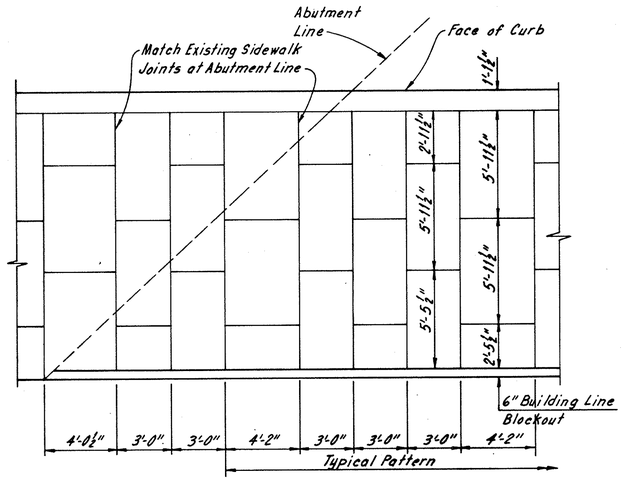

DETAIL A
STATE OFFICE BUILDING
SIDEWALK PATTERN PROSPECT AVE.

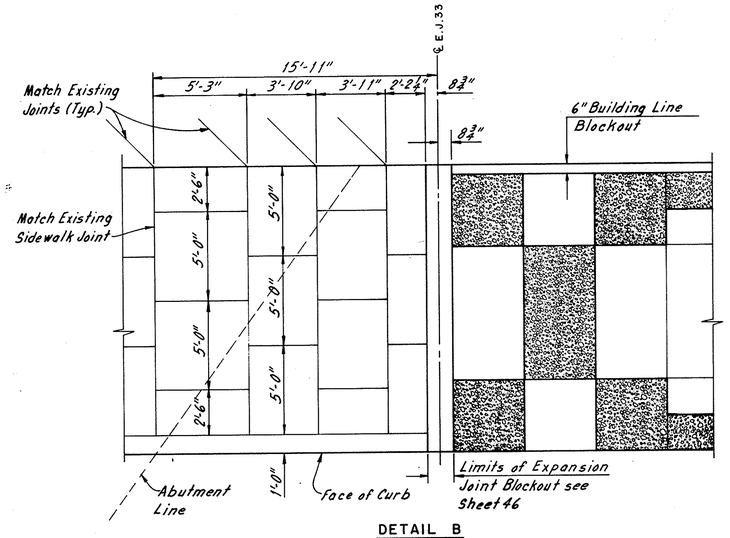

DETAIL B
STATE OFFICE BUILDING
SIDEWALK PATTERN HURON RD.

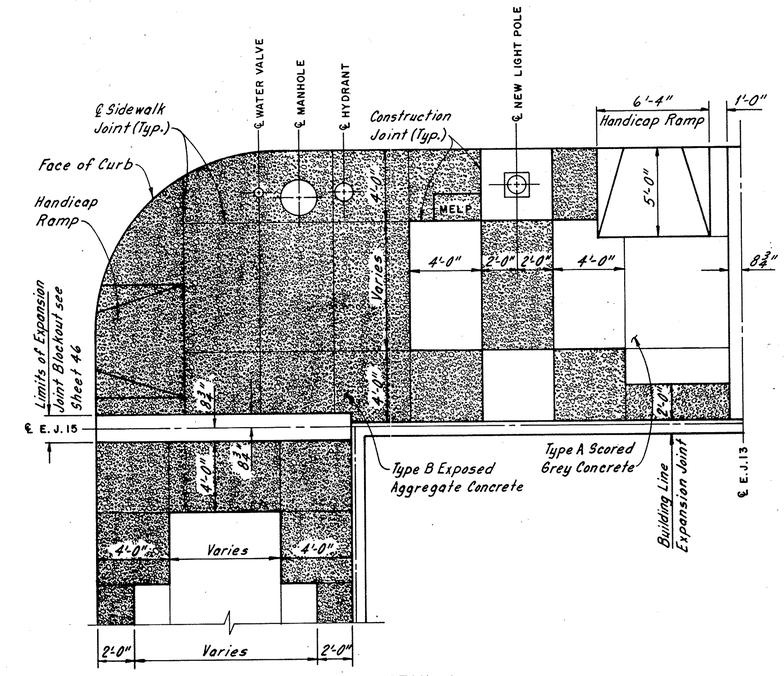

DETAIL C

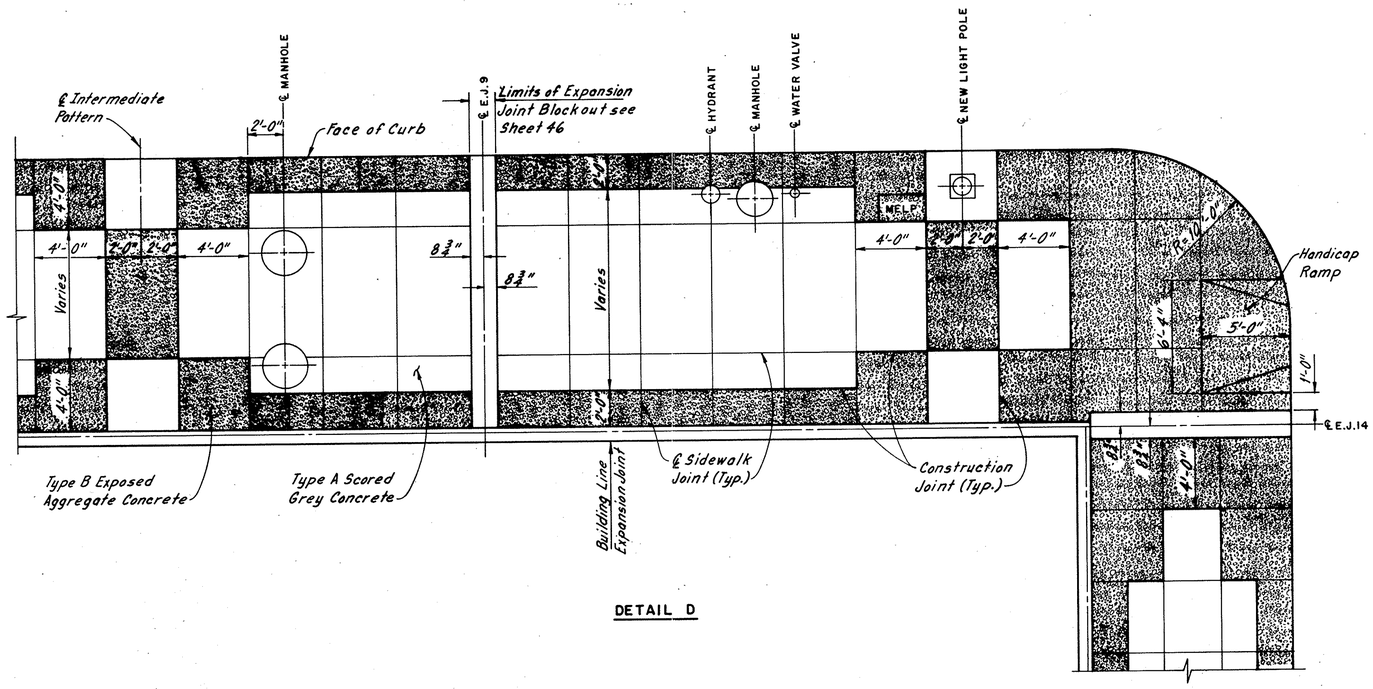

DETAIL D

EUTHENICS INC.
CONSULTING ENGINEERS
CLEVELAND OHIO

REHABILITATION OF TOWER CITY BRIDGES
PROSPECT AVE., HURON ROAD,
WEST 2ND., 3RD. & 6TH. ST. VIADUCTS

SIDEWALK SURFACE DETAILS

CLEVELAND CUYAHOGA COUNTY OHIO

Mode: JSC	Trcd. JSC	Ckd. LJD	Rev. RAB	Scale: ¼"=1'-0"
Date 2-18-83	Date 2-21-83	Date 2-23-83	Date 3-9-83	Sheet 141/170

FHWA REGION	STATE	PROJECT	
5	OHIO	M-1D99(9)	

142/170

CUYAHOGA COUNTY
HURON/PROSPECT BRIDGE

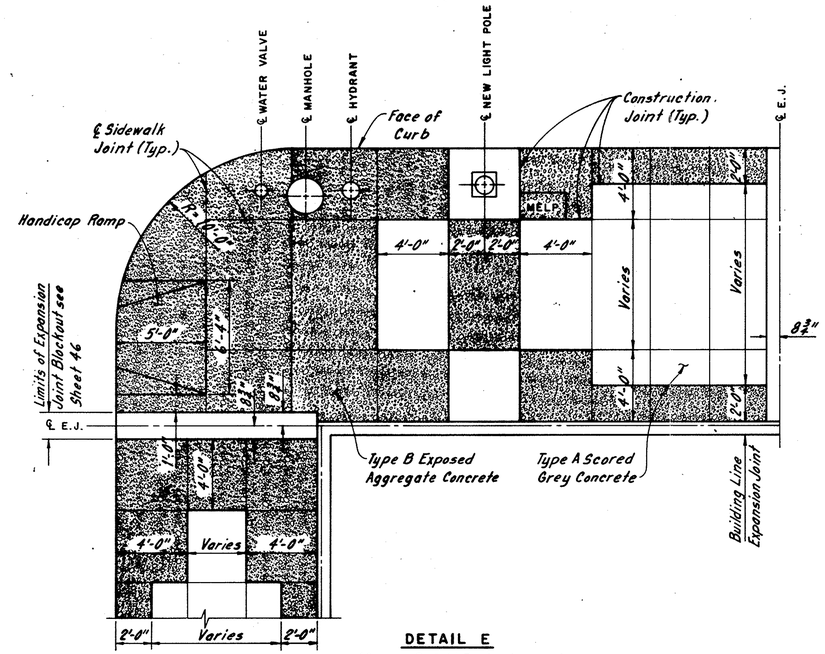

DETAIL E

(Corner Detail Typical except as noted)

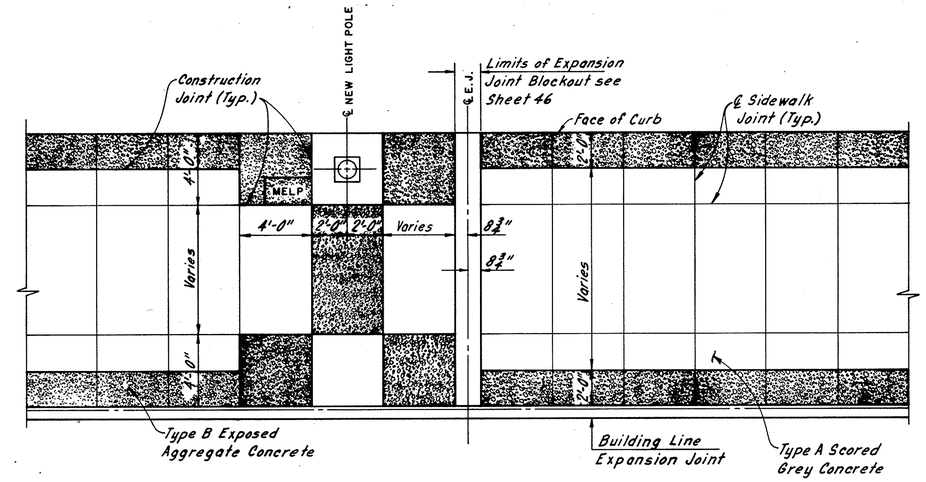

DETAIL F

(Typ. for areas where Light Pole Pattern is adjacent to Expansion Joint)

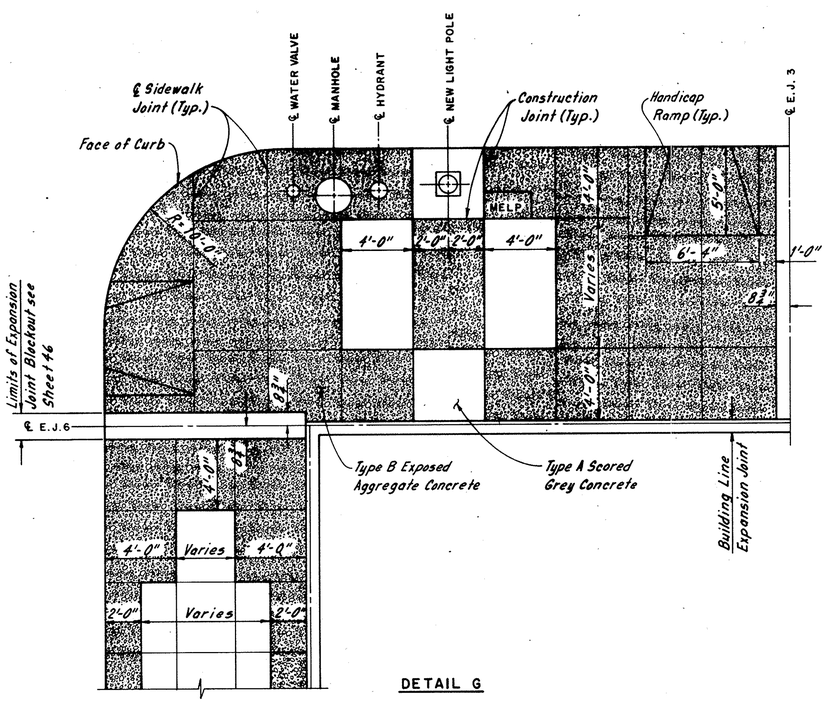

DETAIL G

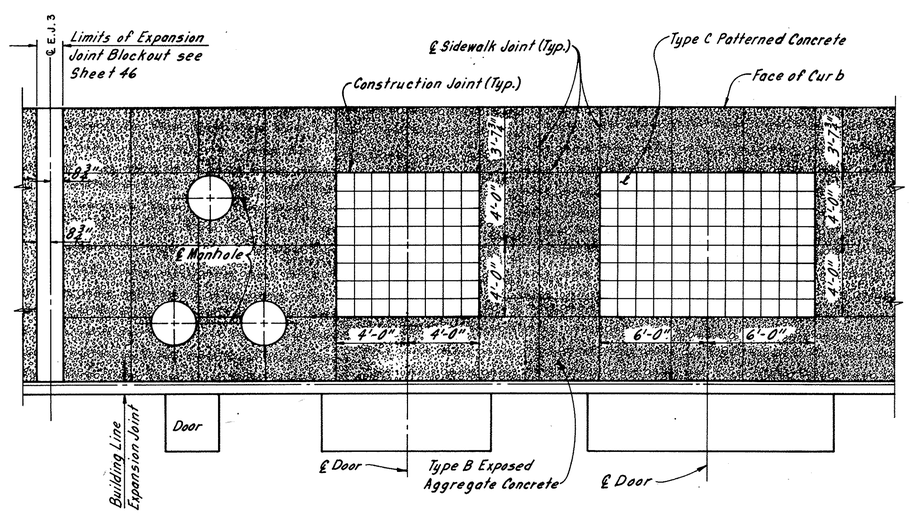

DETAIL H

EUTHENICS INC.
CONSULTING ENGINEERS
CLEVELAND OHIO

REHABILITATION OF TOWER CITY BRIDGES
PROSPECT AVE., HURON ROAD,
WEST 2ND., 3RD. & 6TH. ST. VIADUCTS

SIDEWALK SURFACE DETAILS

CLEVELAND CUYAHOGA COUNTY OHIO

Made JSC	Trcd. JSC	Ckd. LJD	Rev. RAB	Scale: ¼" = 1'-0"
Date 2-22-83	Date 2-23-83	Date 2-24-83	Date 3-9-83	Sheet 142/170

FHWA REGION	STATE	PROJECT	
5	OHIO	M-ID99 (9)	

143
170

CUYAHOGA COUNTY
HURON/PROSPECT BRIDGE

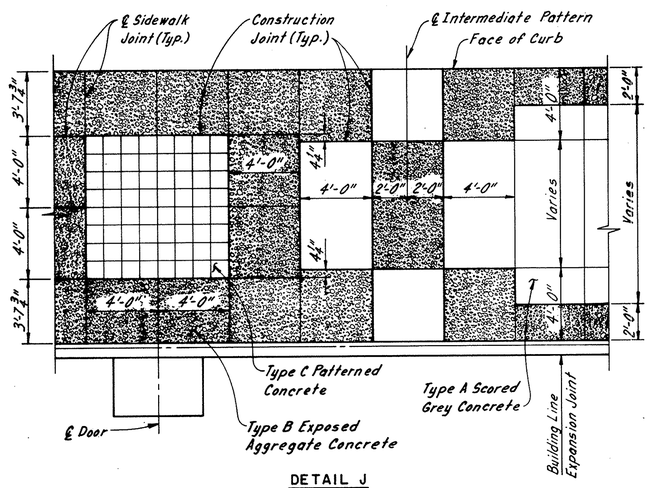

DETAIL J

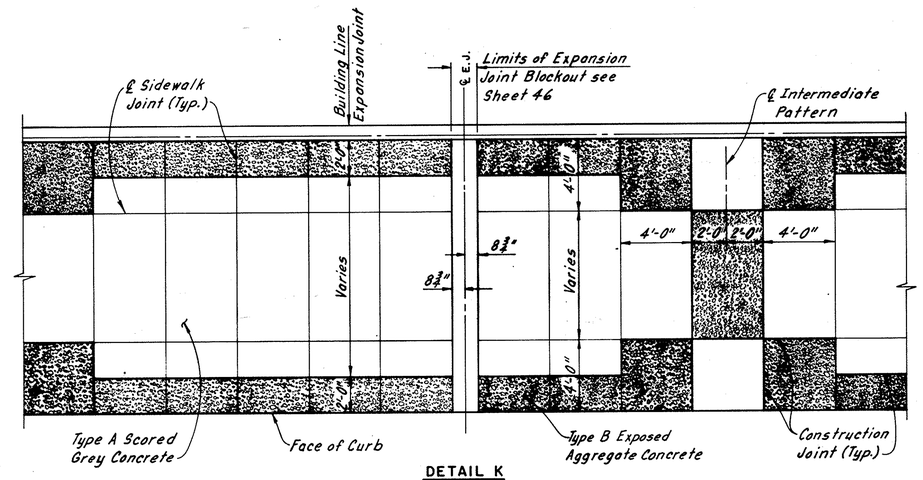

DETAIL K

(Typ. for areas where pattern is between Expansion Joint)

EUTHENICS INC.
CONSULTING ENGINEERS
CLEVELAND OHIO

REHABILITATION OF TOWER CITY BRIDGES
PROSPECT AVE., HURON ROAD,
WEST 2ND., 3RD. & 6TH. ST. VIADUCTS.

SIDEWALK SURFACE DETAILS

CLEVELAND CUYAHOGA COUNTY OHIO

Made JSC	Trcd. JSC	Ckd. LJD	Rev. RAB	Scale: 1"=1'-0"
Date 3-4-83	Date 3-7-83	Date 3-8-83	Date 3-9-83	Sheet 143 / 170

FHWA REGION	STATE	PROJECT	
5	OHIO	M-ID99(9)	

144/170

CUYAHOGA COUNTY
HURON/PROSPECT BRIDGE

FIRE SAFETY PLAN
GENERAL NOTES

GENERAL

THE CONTRACTOR SHALL COMPLY WITH SECTIONS 104.04 & 107.07 OF ODOT CONSTRUCTION AND MATERIAL SPECIFICATIONS AND THE PROVISIONS OF 5517.03 OF THE OHIO REVISED CODE PERTAINING TO PUBLIC SAFETY.

THE CONTRACTOR MUST COMPLY WITH ALL SAFETY REGULATIONS OF THE NATIONAL FIRE PROTECTION ASSOCIATION AND BE IN FULL COMPLIANCE WITH THE NATIONAL FIRE CODE NO. 51B VOLUME 4.

THE CONTRACTOR SHALL ALSO COMPLY WITH CHAPTER 11 OF THE CODIFIED ORDINANCES OF THE CITY OF CLEVELAND.

CONTACT PERSON

A CONTACT PERSON WITH THE AUTHORITY AND RESPONSIBILITY OF CO-ORDINATING THE FIRE SAFETY REQUIREMENTS FOR THE ENTIRE TERM OF THE PROJECT SHALL BE ASSIGNED TO THIS PROJECT BY THE FIRE PROTECTION BUREAU, CITY OF CLEVELAND.

THE CONTRACTOR SHALL, AT ALL TIMES, CO OPERATE WITH THE CONTACT PERSON IN MATTERS OF FIRE SAFETY.

ACCESS FOR FIRE FIGHTING TRUCKS, EQUIPMENT AND PERSONNEL OVER PRE-ARRANGED ROUTES MUST BE MAINTAINED AT ALL TIMES. THE CONTRACTOR MUST NOT STORE MATERIALS OR EQUIPMENT IN OR IN FRONT OF DESIGNATED FIRE EXITS, FIRE ROUTES OR AREAS NORMALLY USED FOR SAFE PASSAGE OF PEOPLE.

THE CONTRACTOR SHALL PROVIDE THE CONTACT PERSON WITH A WORK SCHEDULE TO INFORM HIM OF WHERE WORK WILL BE DONE, THE TYPE OF WORK BEING PERFORMED AND HOW LONG IT WILL TAKE. THE CONTACT PERSON WILL CO ORDINATE THE PROJECTS FIRE SAFETY NEEDS WITH THE CONTRACTOR'S WORK SCHEDULE. THE CONTRACTOR MUST KNOW AND UNDERSTAND WHAT IS REQUIRED OF HIM IN CASE OF AN EMERGENCY SO THAT THE FIRE SAFETY PLAN, AS DESIGNATED BY THE CONTACT PERSON, CAN BE IMPLEMENTED IMMEDIATELY WITHOUT ANY UNNECESSARY DELAYS

THE ASSIGNED CONTACT PERSON FOR THIS PROJECT SHALL BE _____ OR ANOTHER DESIGNATED PERSON. THE CONTACT PERSON OR ANY OTHER ASSIGNED PERSON MUST BE AVAILABLE FOR EMERGENCIES AT ALL TIMES AND MAY BE CONTACTED THRU:

THE FIRE PROTECTION BUREAU
DIVISION OF FIRE
1645 SUPERIOR AVENUE, EAST
CLEVELAND, OHIO 44114
PHONE: 621-1230

THE NAME, ADDRESS AND PHONE NUMBER OF THE CONTACT PERSON MUST BE POSTED IN VARIOUS CONSPICUOUS LOCATIONS ON THE PROJECT AT ALL TIMES SO THE CONTRACTOR, HIS EMPLOYEES, THE ENGINEER OR ANY OTHER INDIVIDUAL ON THE JOB SITE WILL KNOW HOW AND WHERE TO CONTACT HIM DURING AN EMERGENCY. THE CONTACT PERSON WILL INSPECT THE SITE REGULARLY TO INSURE CONFORMANCE WITH THE SAFETY REQUIREMENTS.

THE CONTACT PERSON SHALL BECOME FAMILIAR WITH ALL THE FIRE SAFETY REQUIREMENTS OF ADJOINING PROPERTY OWNERS. HE SHALL HAVE THE NAME AND METHOD OF CONTACTING THE INDIVIDUAL RESPONSIBLE FOR THE FIRE SAFETY PROBLEMS OF THE ADJOINING PROPERTIES AND BUILDINGS. HE SHALL CO-ORDINATE HIS EFFORTS WITH PROPERTY OWNERS TO INSURE COMPLETE COMPLIANCE WITH APPLICABLE SAFETY FIRE CODES. THE CONTRACTOR AND/OR THE CONTACT PERSON SHALL ADVISE ADJACENT PROPERTY OWNERS OF THE CONSTRUCTION PROGRESS AND PHASE OF WORK ON THE PROJECT SITE.

STORAGE OF FLAMMABLE MATERIALS

THE CONTRACTOR SHALL MAKE AVAILABLE TO THE CONTACT PERSON A LIST OF ALL MATERIALS, EQUIPMENT AND SUPPLIES TO BE USED ON THE PROJECT SO THE CONTACT PERSON CAN ADVISE THE CONTRACTOR ABOUT ANY FLAMMABLE MATERIALS, LOCATIONS AND METHODS OF STORAGE AND/OR ANY OTHER FIRE SAFETY HAZARDS INVOLVED WITH THE PARTICULAR ITEMS BEING USED. WHERE FLAMMABLE MATERIALS ARE STORED, SMOKING WILL BE PROHIBITED AND THE AREA CONSPICUOUSLY POSTED, AS APPROVED BY THE CONTACT PERSON. FLAMMABLE OR COMBUSTIBLE LIQUIDS MAY NOT BE STORED IN AREAS USED FOR EXITS, RAMPS OR NORMALLY USED FOR THE SAFE PASSAGE OF PEOPLE

FIRE WATCH

A FIRE WATCH SHALL BE PROVIDED BY THE CONTRACTOR AT ALL TIMES DURING WELDING OPERATIONS OVER OCCUPIED SPACES OR AS DESIGNATED BY THE CONTACT PERSON. THE FIRE WATCH SHALL HAVE FIRE EXTINGUISHING EQUIPMENT READILY AVAILABLE, CONSPICUOUSLY MARKED, MAINTAINED IN OPERATING CONDITION AND BE TRAINED IN ITS USE. THE FIRE WATCH SHALL BE FAMILIAR WITH FACILITIES AND PROCEDURES FOR SOUNDING AN ALARM IN THE EVENT OF A FIRE OR AN EMERGENCY, WATCH FOR FIRES AND TRY TO EXTINGUISH THEM FIRST OR SOUND THE ALARM. THE FIRE WATCH SHALL REMAIN ON THE JOB SITE A MINIMUM OF 1/2 HOUR AFTER COMPLETION OF CUTTING OR WELDING OPERATIONS TO DETECT AND EXTINGUISH POSSIBLE FIRES.

WELDING SAFETY

DURING WELDING OPERATIONS OVER OCCUPIED AREAS, EXTREME CARE MUST BE EXERCISED AND ENFORCED. THE CONTRACTOR SHALL PROVIDE A FIRE RESISTANT MATERIAL TO PROTECT SCAFFOLDING, ROOFS, PIPES AND WIRES BELOW THE WORKING AREAS.

THE CONTRACTOR SHALL PROVIDE EXHAUST FANS FOR SMOKE VENTILATION PURPOSES WHEN WORKING OVER OCCUPIED AREAS. THE NUMBER, SIZE AND TYPE OF EXHAUST FANS SHALL BE ACCEPTABLE TO THE CONTACT PERSON AND/OR THE ENGINEER. THE CONTRACTOR SHALL ACCEPT THE ADVICE OF THE CONTACT PERSON AS TO THE PLACEMENT AND NEED OF THE VENT UNITS

PROPERTY OWNERS RESPONSIBILITY

THE BUILDING OWNERS SHALL PROVIDE THE CONTACT PERSON WITH A SCHEDULE OF SPECIAL EVENTS, WELL IN ADVANCE OF THE EVENTS, WHERE ADDITIONAL PERSONS WILL BE USING THE FACILITIES SO PROVISIONS CAN BE MADE TO ACCOMMODATE THE ADDITIONAL SURGE OF PEOPLE IN CASE OF AN EMERGENCY.

EACH PROPERTY OWNER SHALL PROVIDE PROOF TO THE CONTACT PERSON THAT THEIR INDIVIDUAL FIRE EXTINGUISHING SYSTEMS, STANDPIPES, SIAMESE CONNECTIONS, ETC HAVE BEEN INSPECTED AND ACCEPTED BY THE FIRE DEPARTMENT AND ARE NOW IN OPERABLE CONDITION PRIOR TO BEGINNING ANY WORK IN THEIR PARTICULAR AREA. IF PROOF IS NOT AVAILABLE THE CONTACT PERSON SHALL PROVIDE FOR THE INSPECTION AT THE INDIVIDUAL PROPERTY OWNERS EXPENSE. NO WORK WILL BEGIN UNTIL EVERY PROPERTY OWNER IS IN COMPLIANCE WITH THIS SECTION.

FIRE CONNECTIONS & HYDRANTS

ACCESS TO ALL STANDPIPES, FIRE CONNECTIONS AND FIRE FIGHTING EQUIPMENT MUST BE MAINTAINED AT ALL TIMES. ANY CONNECTIONS MADE INACCESSIBLE DUE TO CONSTRUCTION MAY BE EXTENDED BY AN ACCEPTABLE ALTERNATE SYSTEM OF PIPING AND PROPER FITTINGS. THE CONTRACTOR SHALL SUBMIT HIS PROPOSED METHOD OF EXTENDING THE CONNECTIONS TO THE CONTACT PERSON AND FIRE DEPARTMENT FOR APPROVAL.

ALL FIRE HYDRANTS SHALL BE SUPPORTED DURING CONSTRUCTION AND MAINTAINED IN WORKING ORDER DURING THE DURATION OF THE PROJECT. IF A HYDRANT IS DAMAGED OR BROKEN DURING CONSTRUCTION ITS LOCATION AND CONDITION MUST BE REPORTED TO THE CONTACT PERSON AND THE CITY WATER DEPARTMENT IMMEDIATELY AND PUT BACK IN WORKING ORDER WITHIN 48 HOURS AT THE CONTRACTOR'S EXPENSE.

IF THE HYDRANT IS DAMAGED OR OUT OF ORDER, ALTERNATE PROVISIONS SHALL BE MADE TO PROVIDE FOR FIRE PROTECTION ACCEPTABLE TO THE CONTACT PERSON AND FIRE DEPARTMENT.

THE CONTRACTOR SHALL LIMIT HIS WORK AROUND FIRE HYDRANTS TO ONE HYDRANT AT A TIME OR AN ACCEPTABLE ALTERNATIVE TO PROVIDE ADEQUATE FIRE PROTECTION AND MAINTAIN ACCESS TO THE HYDRANT DURING EMERGENCIES.

FIRE EXITS

TO PROVIDE A SAFE EXIT FOR PEOPLE AT FIRE EXITS WHERE THE SIDEWALK AND/OR DECK IS BEING REPAIRED OR OPENINGS IN THE DECK PROVIDE A HAZARD FOR PEOPLE A TEMPORARY RAMP TO INCLUDE HANDRAILS, WHERE NECESSARY, CAPABLE OF SUPPORTING A LIVE LOAD OF 100 POUNDS PER SQUARE FOOT SHALL BE INSTALLED AND MAINTAINED BY THE CONTRACTOR. THE CONTRACTOR'S DESIGN FOR THE RAMP SHALL BE SUBMITTED TO THE CONTACT PERSON AND ENGINEER FOR APPROVAL. THE RAMP SHALL REMAIN IN PLACE AND IN SERVICE UNTIL THE HAZARD HAS BEEN REMOVED AND THE CONTACT PERSON AND/OR ENGINEER AGREES IT IS NO LONGER NEEDED, AT WHICH TIME THE CONTRACTOR WILL REMOVE AND DISPOSE OF THE RAMP.

THE CONTRACTOR SHALL PROVIDE AND MAINTAIN ADEQUATE LIGHTING WITHIN THE LIMITS OF THE PROJECT, AT ALL FIRE EXITS AND FIRE ROUTES. THE LIGHTING SHALL BE ACCEPTABLE TO THE CONTACT PERSON AND THE ENGINEER.

LIABILITY

NEITHER THE CITY OF CLEVELAND NOR THE CONTACT PERSON SHALL BE LIABLE FOR ANY DAMAGES RESULTING FROM ANY FIRE ON THE PROJECT SITE OR PROPERTY ADJACENT THERETO.

EUTHENICS INC.
CONSULTING ENGINEERS
CLEVELAND OHIO

REHABILITATION OF TOWER CITY BRIDGES
PROSPECT AVE., HURON ROAD,
WEST 2ND., 3RD. & 6TH. ST. VIADUCTS

FIRE SAFETY PLAN
GENERAL NOTES

CLEVELAND CUYAHOGA COUNTY OHIO

Mode LJD	Trcd. LJ	Ckd. LJD	Rev. PAB	Scale
Date 1-28-83	Date 2-1-83	Date 2-2-83	Date 2-3-83	Sheet 144 / 170

FHWA REGION	STATE	PROJECT	
5	OHIO	M-ID99(9)	

145/170

CUYAHOGA COUNTY
HURON/PROSPECT BRIDGE

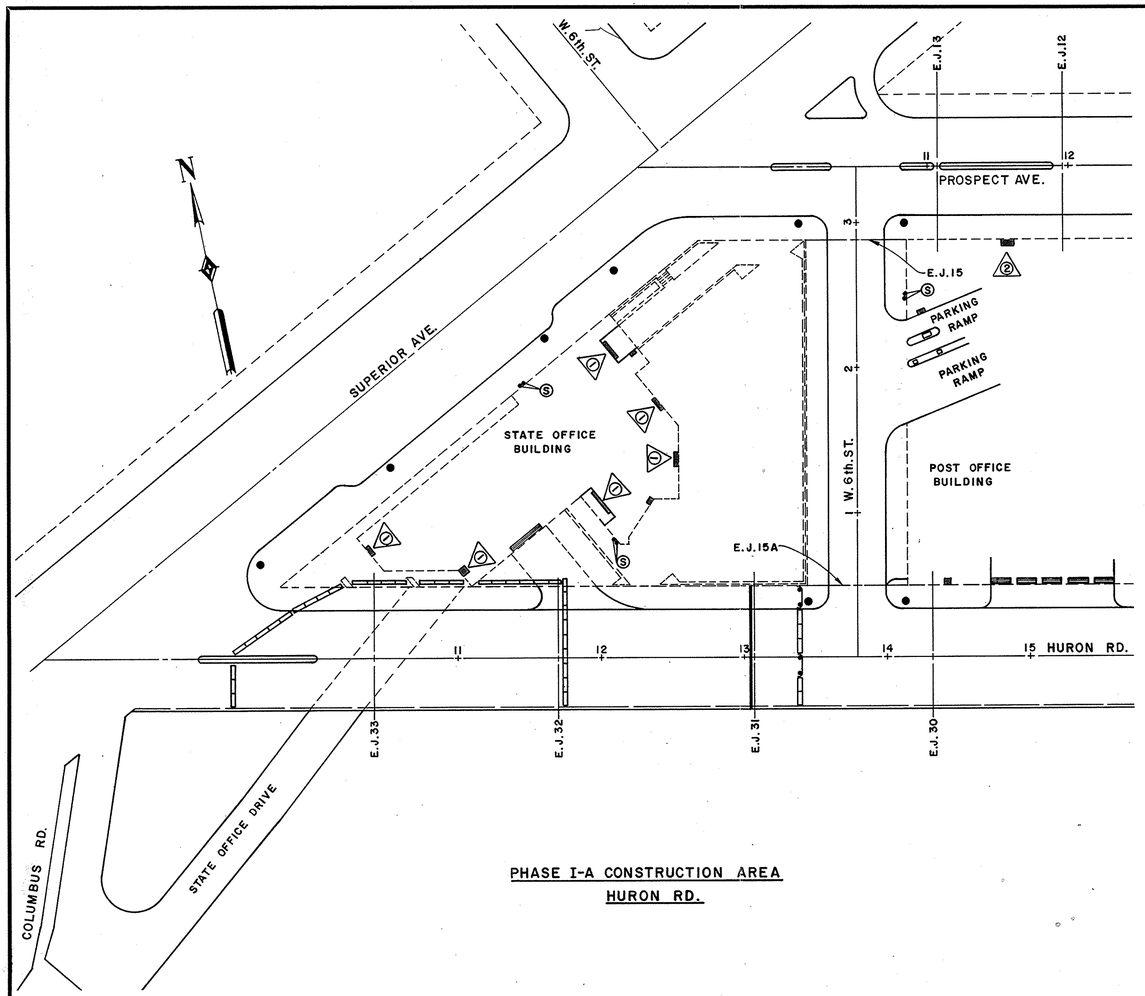

PHASE I-A CONSTRUCTION AREA
HURON RD.

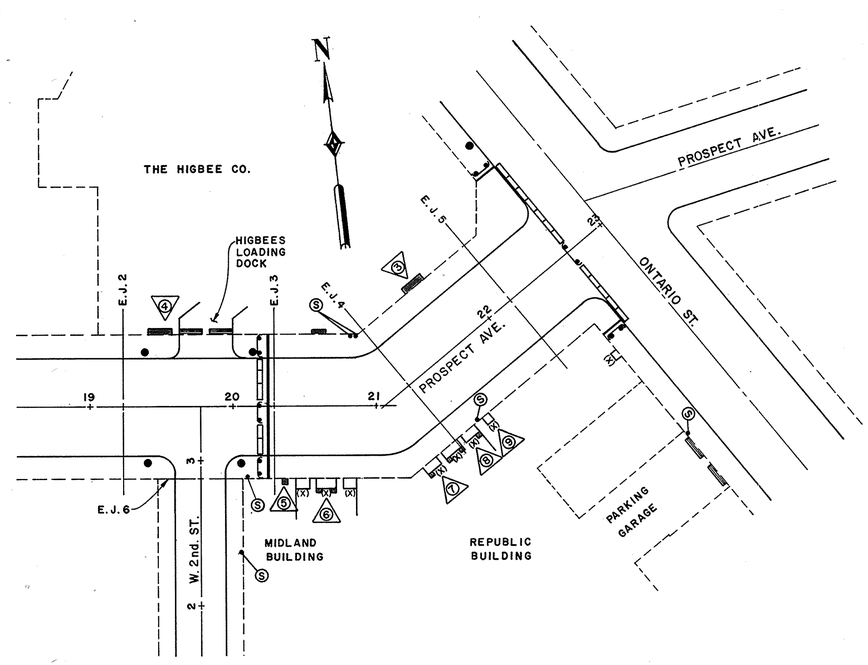

PHASE I-A CONSTRUCTION AREA
PROSPECT AVE.

LEGEND

- Fire Hydrant
- Fire Department Standpipes
- Fire Exits Reference Numbers
- Fire Department Alarm Box
- (X) Revolving Door to Building
- Overhead Door to Building
- Doorway to Building
- Opening to Building
- Sohio Computer Access & Vent
- Temporary Precast Concrete Barrier
- Temporary Beam Rail on Barrels

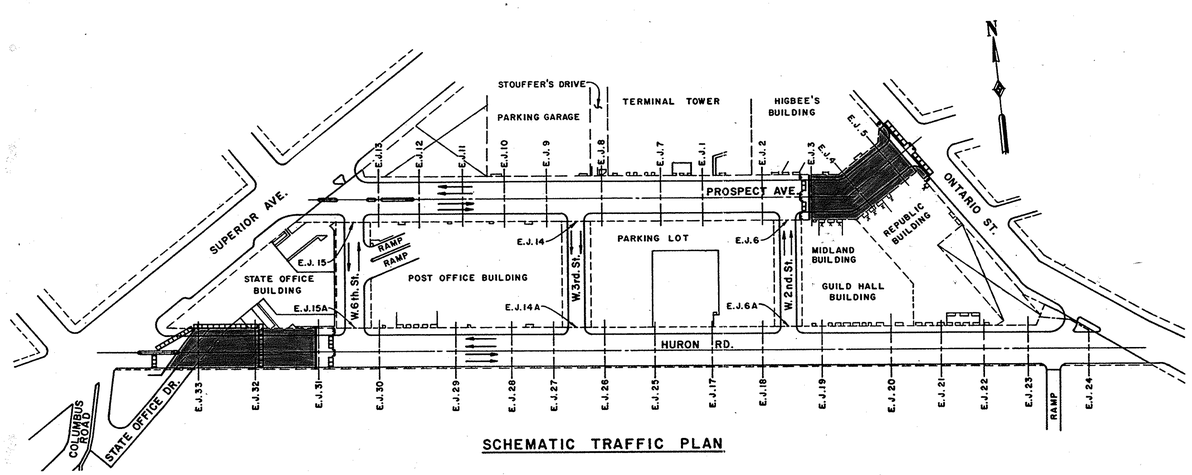

SCHEMATIC TRAFFIC PLAN

PHASE I-A CONSTRUCTION GENERAL NOTES

1. Access must be maintained to all fire hydrants and fire connections unless an acceptable alternate is approved
2. The Contractor shall maintain temporary lighting at all fire exits within the construction phase and provide a temporary safe route with lighting to guide pedestrians to safety outside of the construction phase limits.
3. Cold weather protection for the existing water pipes must be maintained during construction to guarantee availability of water supply for emergencies.
4. Guardrail on barrels shall be used and maintained by Contractor as access openings in the precast concrete barriers for emergency vehicles.
5. For details of Traffic Plans During Construction see Maintenance of Traffic Plans, Sheets 4 thru 9.
6. No materials or construction vehicles are to be stored or parked on streets or sidewalks outside the barricaded areas at any time unless approved by the Engineer.
7. In case of fire at Higbees Building fire fighting equipment should report to the Higbee Loading Dock. One of the loaidng dock doors will remain open at all times.
8. Fire Exits - These exits must be maintained during this phase construction. There are other fire exits not in this construction area that must be maintained by the individual building owners:

- (1) State Office Building
- (2) Old Post Office (Maintain if Building is Occupied)
- (3) Higbee's Building
- (4) Higbee's Building
- (5) Sohio Travel Bureau
- (6) Central National Bank (Maintain 1 Door as Fire Exit)
- (7) Guild Hall & Midland Buildings (Maintain 1 Door as Fire Exit)
- (8) Republic Building
- (9) AmeriTrust Building
- Terminal Tower Delivery Entrance
- Terminal Tower (Maintain 1 Door as Fire Exit)

EUTHENICS INC.
CONSULTING ENGINEERS
CLEVELAND OHIO

REHABILITATION OF TOWER CITY BRIDGES
PROSPECT AVE., HURON ROAD,
WEST 2ND., 3RD. & 6TH. ST. VIADUCTS

FIRE SAFETY PLAN
PHASE I-A CONSTRUCTION

CLEVELAND CUYAHOGA COUNTY OHIO

Mode LJD	Trcd. JSC	Ckd. LJD	Rev. RAB	Scale: No Scale
Date 1-27-83	Date 1-28-83	Date 1-31-83	Date 2-2-83	Sheet 145/170

FHWA REGION	STATE	PROJECT	
5	OHIO	M-ID99(9)	

145A
170

CUYAHOGA COUNTY
HURON/PROSPECT BRIDGE

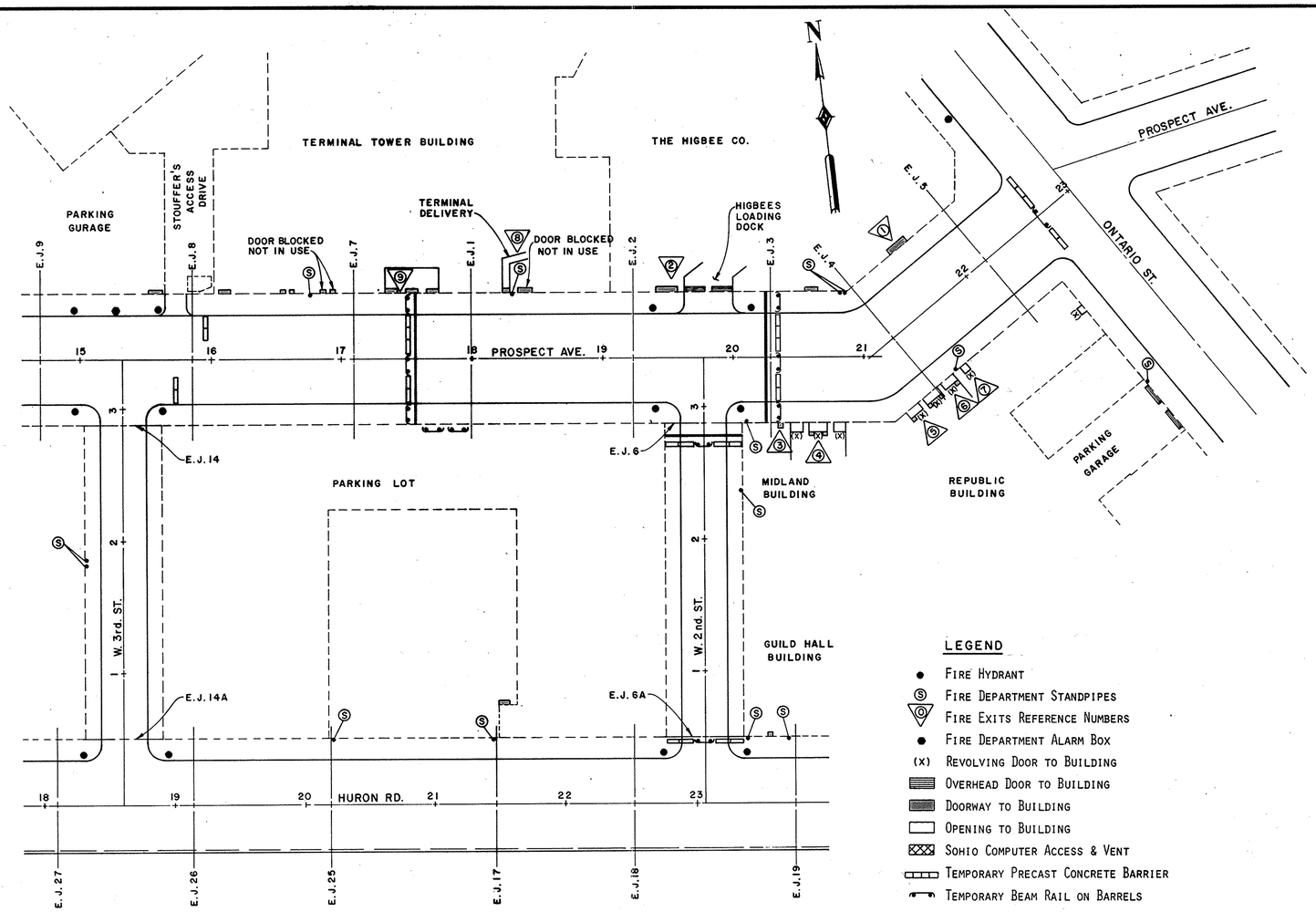

PHASE I CONSTRUCTION AREA

LEGEND

- Fire Hydrant
- Fire Department Standpipes
- Fire Exits Reference Numbers
- Fire Department Alarm Box
- (x) Revolving Door to Building
- Overhead Door to Building
- Doorway to Building
- Opening to Building
- Sohio Computer Access & Vent
- Temporary Precast Concrete Barrier
- Temporary Beam Rail on Barrels

PHASE I CONSTRUCTION GENERAL NOTES

1. Access must be maintained to all fire hydrants and fire connections unless an acceptable alternate is approved.
2. The Contractor shall maintain temporary lighting at all fire exits within the construction phase and provide a temporary safe route with lighting to guide pedestrians to safety outside of the construction phase limits.
3. Cold weather protection for the existing water pipes must be maintained during construction to guarantee availabi lity of water supply for emergencies.
4. Guardrail on barrels shall be used and maintained by Contractor as access openings in the precast concrete barriers for emergency vehicles.
5. For details of Traffic Plans During Construction see Maintenance of Traffic Plans, Sheets 4 thru 9.
6. No materials or construction vehicles are to be stored or parked on Ontario Street or sidewalk or outside the barricaded areas at any time unless approved by the Engineer.
7. In case of fire at Higbees Building fire fighting equipment should report to the Higbee Loading Dock. One of the loaidng dock doors will remain open at all times.
8. Fire Exits - These exits must be maintained during this phase construction. There are other fire exits not in this construction area that must be maintained by the individual building owners:

   1. Higbee's Building
   2. Higbee's Building
   3. Sohio Travel Bureau
   4. Central National Bank (Maintain 1 Door as Fire Exit)
   5. Guild Hall & Midland Buildings (Maintain 1 Door as Fire Exit)
   6. Republic Building
   7. AmeriTrust Building
   8. Terminal Tower Delivery Entrance
   9. Terminal Tower (Maintain 1 Door as Fire Exit)

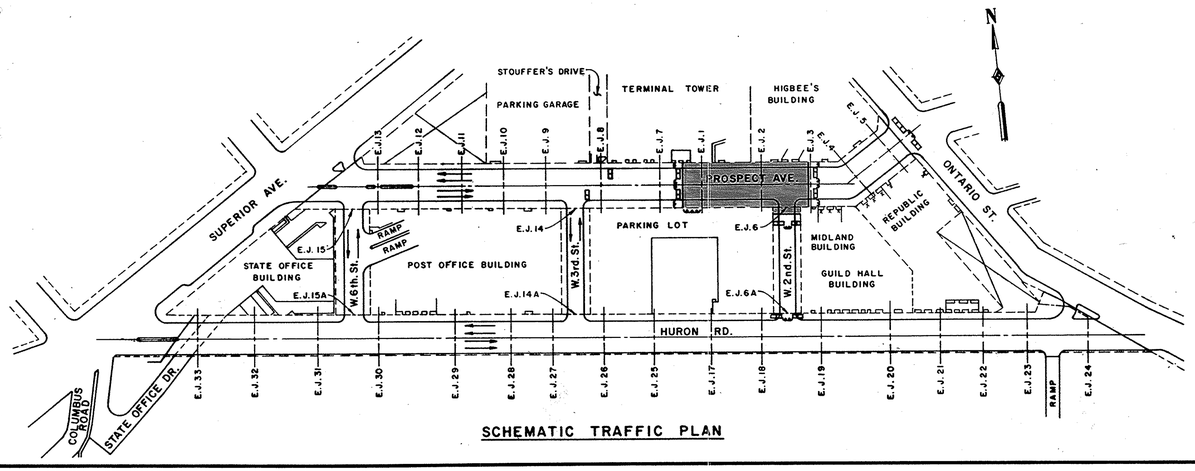

SCHEMATIC TRAFFIC PLAN

EUTHENICS INC.
CONSULTING ENGINEERS
CLEVELAND OHIO

REHABILITATION OF TOWER CITY BRIDGES
PROSPECT AVE., HURON ROAD,
WEST 2ND., 3RD. & 6TH. ST. VIADUCTS

FIRE SAFETY PLAN
PHASE I CONSTRUCTION

CLEVELAND CUYAHOGA COUNTY OHIO

Made LJD	Trcd. JSC	Ckd. LJD	Rev. RAB	Scale: No Scale
Date 1-24-83	Date 1-25-83	Date 1-26-83	Date 1-27-83	Sheet 145A/170

FHWA REGION	STATE	PROJECT	
5	OHIO	M-ID99(9)	

146/170

CUYAHOGA COUNTY
HURON/PROSPECT BRIDGE

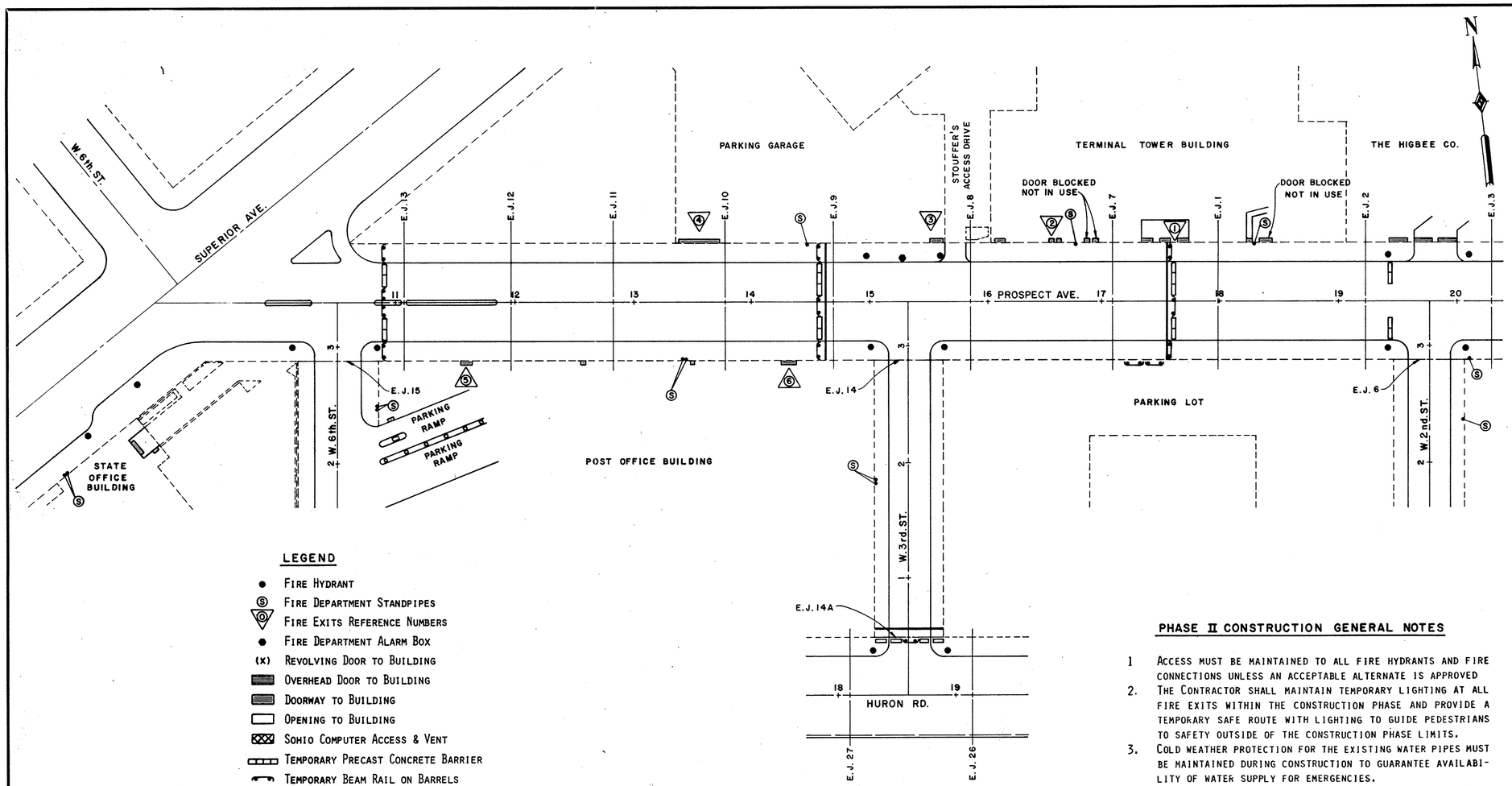

PHASE II CONSTRUCTION AREA

LEGEND

- Fire Hydrant
- Fire Department Standpipes
- Fire Exits Reference Numbers
- Fire Department Alarm Box
- (x) Revolving Door to Building
- Overhead Door to Building
- Doorway to Building
- Opening to Building
- Sohio Computer Access & Vent
- Temporary Precast Concrete Barrier
- Temporary Beam Rail on Barrels

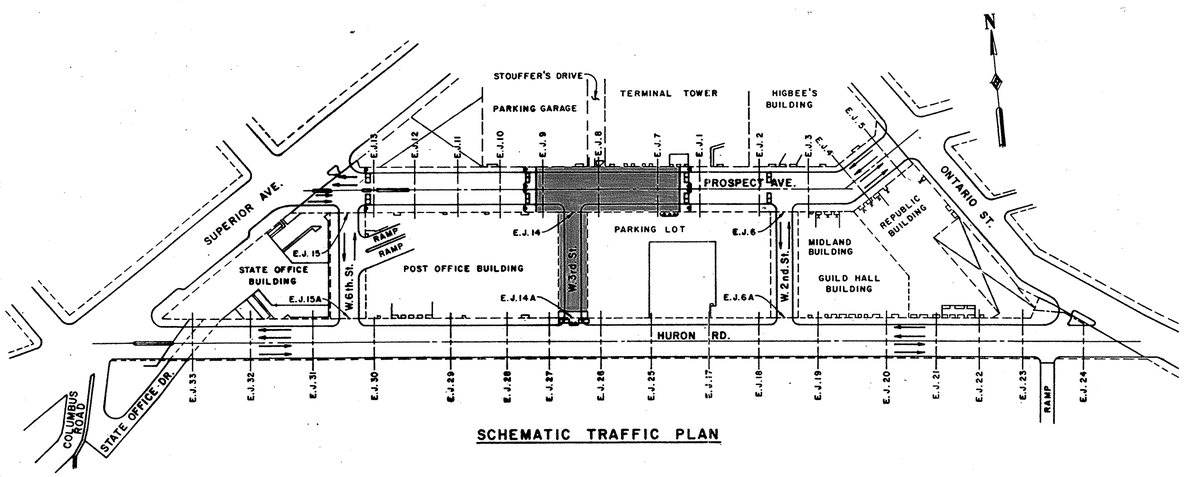

SCHEMATIC TRAFFIC PLAN

PHASE II CONSTRUCTION GENERAL NOTES

1. Access must be maintained to all fire hydrants and fire connections unless an acceptable alternate is approved
2. The Contractor shall maintain temporary lighting at all fire exits within the construction phase and provide a temporary safe route with lighting to guide pedestrians to safety outside of the construction phase limits.
3. Cold weather protection for the existing water pipes must be maintained during construction to guarantee availability of water supply for emergencies.
4. Guardrail on barrels shall be used and maintained by Contractor as access openings in the precast concrete barriers for emergency vehicles.
5. For details of Traffic Plans During Construction see Maintenance of Traffic Plans, Sheets 4 thru 9.
6. No materials or construction vehicles are to be stored or parked outside the barricaded areas at any time unless approved by the Engineer.
7. Fire Exits - These exits must be maintained during this phase construction. There are other fire exits not in this construction area that must be maintained by the individual building owners:

- (1) Terminal Tower (Maintain 1 Door as Fire Exit)
- (2) Terminal Tower. Atrium (Maintain 1 Door as Fire Exit)
- (3) Stouffer's Exhibition Hall
- (4) Stouffer's Main Ball Room
- (5) Old Post Office (Maintain if Building is Occupied)
- (6) Old Post Office (Maintain if Building is Occupied)

EUTHENICS INC.
CONSULTING ENGINEERS
CLEVELAND OHIO

REHABILITATION OF TOWER CITY BRIDGES
PROSPECT AVE., HURON ROAD,
WEST 2ND., 3RD. & 6TH. ST. VIADUCTS

FIRE SAFETY PLAN
PHASE II CONSTRUCTION

CLEVELAND CUYAHOGA COUNTY OHIO

Made LJD	Trcd. JSC	Ckd. LJD	Rev. RAB	Scale: No Scale
Date 1-25-83	Date 1-26-83	Date 1-27-83	Date 1-28-83	Sheet 146/170

FHWA REGION	STATE	PROJECT	
5	OHIO	M-ID99 (9)	

147
170

CUYAHOGA COUNTY
HURON/PROSPECT BRIDGE

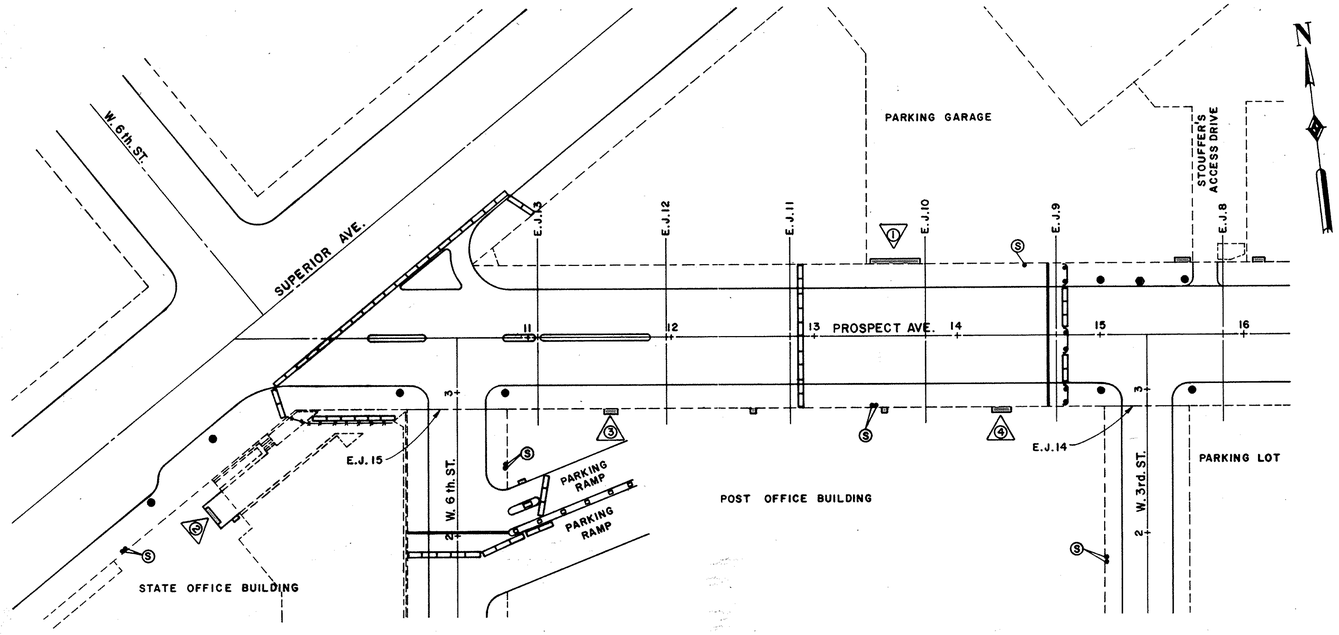

PHASE III CONSTRUCTION AREA

LEGEND

- ● Fire Hydrant
- Ⓢ Fire Department Standpipes
- ▽ Fire Exits Reference Numbers
- ● Fire Department Alarm Box
- (X) Revolving Door to Building
- Overhead Door to Building
- Doorway to Building
- Opening to Building
- Sohio Computer Access & Vent
- Temporary Precast Concrete Barrier
- Temporary Beam Rail on Barrels

PHASE III CONSTRUCTION GENERAL NOTES

1. Access must be maintained to all fire hydrants and fire connections unless an acceptable alternate is approved
2. The Contractor shall maintain temporary lighting at all fire exits within the construction phase and provide a temporary safe route with lighting to guide pedestrians to safety outside of the construction phase limits.
3. Cold weather protection for the existing water pipes must be maintained during construction to guarantee availability of water supply for emergencies.
4. Guardrail on barrels shall be used and maintained by Contractor as access openings in the precast concrete barriers for emergency vehicles.
5. For details of Traffic Plans During Construction see Maintenance of Traffic Plans, Sheets 4 thru 9.
6. No materials or construction vehicles are to be stored or parked outside the barricaded areas at any time unless approved by the Engineer.
7. Fire Exits - These exits must be maintained during this phase construction. There are other fire exits not in this construction area that must be maintained by the individual building owners:

   - ▽ (1) Stouffer's Main Ball Room
   - ▽ (2) State Office Building
   - ▽ (3) Old Post Office (Maintain if Building is Occupied)
   - ▽ (4) Old Post Office (Maintain if Building is Occupied)

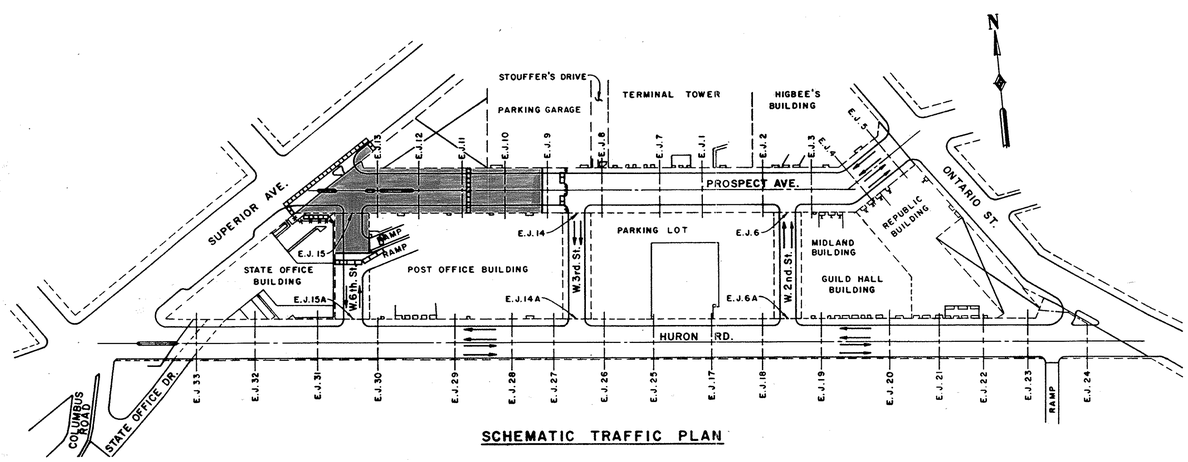

SCHEMATIC TRAFFIC PLAN

EUTHENICS INC.
CONSULTING ENGINEERS
CLEVELAND OHIO

REHABILITATION OF TOWER CITY BRIDGES
PROSPECT AVE., HURON ROAD,
WEST 2ND., 3RD. & 6TH. ST. VIADUCTS

FIRE SAFETY PLAN
PHASE III CONSTRUCTION

CLEVELAND CUYAHOGA COUNTY OHIO

Mode LJD	Trcd. JSC	Ckd. LJD	Rev. RAB	Scale: No Scale
Date 1-26-83	Date 1-27-83	Date 1-28-83	Date 2-1-83	Sheet 147/170

FHWA REGION	STATE	PROJECT	
5	OHIO	M-ID99(9)	

148 / 170

CUYAHOGA COUNTY
HURON/PROSPECT BRIDGE

LEGEND

- Fire Hydrant
- Fire Department Standpipes
- Fire Exits Reference Numbers
- Fire Department Alarm Box
- (X) Revolving Door to Building
- Overhead Door to Building
- Doorway to Building
- Opening to Building
- Sohio Computer Access & Vent
- Temporary Precast Concrete Barrier
- Temporary Beam Rail on Barrels

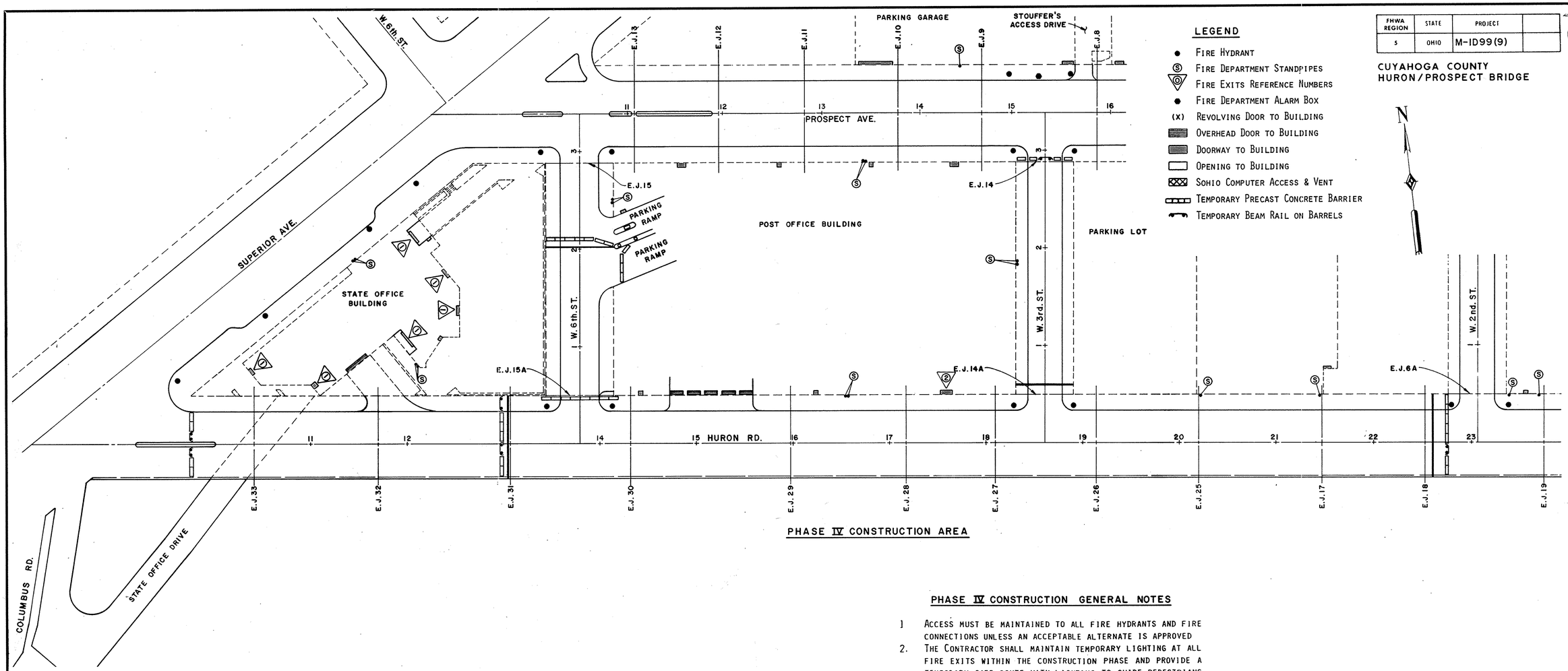

PHASE IV CONSTRUCTION AREA

PHASE IV CONSTRUCTION GENERAL NOTES

1. Access must be maintained to all fire hydrants and fire connections unless an acceptable alternate is approved
2. The Contractor shall maintain temporary lighting at all fire exits within the construction phase and provide a temporary safe route with lighting to guide pedestrians to safety outside of the construction phase limits.
3. Cold weather protection for the existing water pipes must be maintained during construction to guarantee availability of water supply for emergencies.
4. Guardrail on barrels shall be used and maintained by Contractor as access openings in the precast concrete barriers for emergency vehicles.
5. For details of Traffic Plans During Construction see Maintenance of Traffic Plans, Sheets 4 thru 9.
6. No materials or construction vehicles are to be stored or parked outside the barricaded areas at any time unless approved by the Engineer.
7. Fire Exits - These exits must be maintained during this phase construction. There are other fire exits not in this construction area that must be maintained by the individual building owners:
   - (1) State Office Building
   - (2) Old Post Office (Maintain if Building is Occupied)

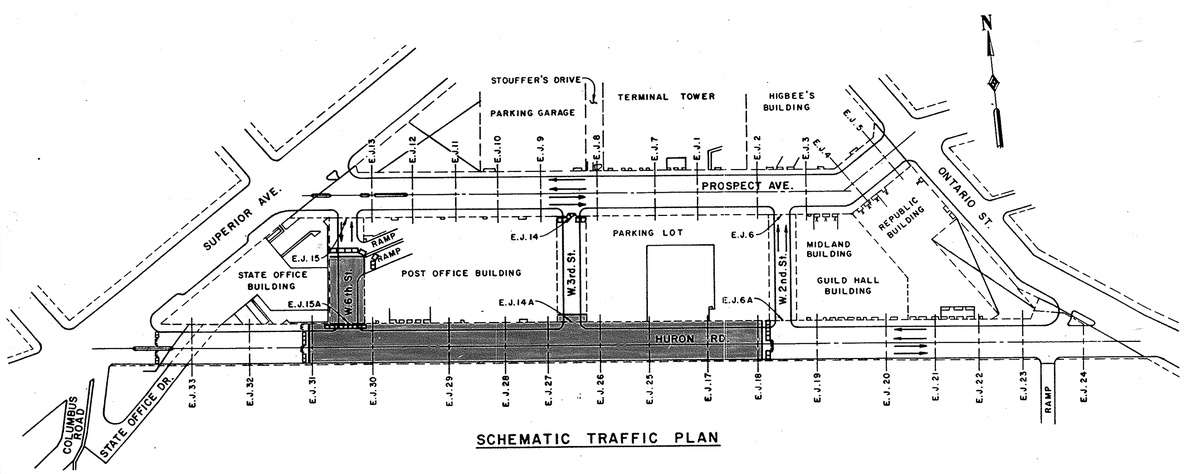

SCHEMATIC TRAFFIC PLAN

EUTHENICS INC.
CONSULTING ENGINEERS
CLEVELAND OHIO

REHABILITATION OF TOWER CITY BRIDGES
PROSPECT AVE., HURON ROAD,
WEST 2ND., 3RD. & 6TH. ST. VIADUCTS

FIRE SAFETY PLAN
PHASE IV CONSTRUCTION

CLEVELAND CUYAHOGA COUNTY OHIO

Made LJD	Trcd. JSC	Ckd. LJD	Rev. RAB	Scale: No Scale
Date 1-27-83	Date 1-28-83	Date 1-31-83	Date 2-2-83	Sheet 148 / 170

FHWA REGION	STATE	PROJECT	
5	OHIO	M-ID99(9)	

149/170

CUYAHOGA COUNTY
HURON/PROSPECT BRIDGE

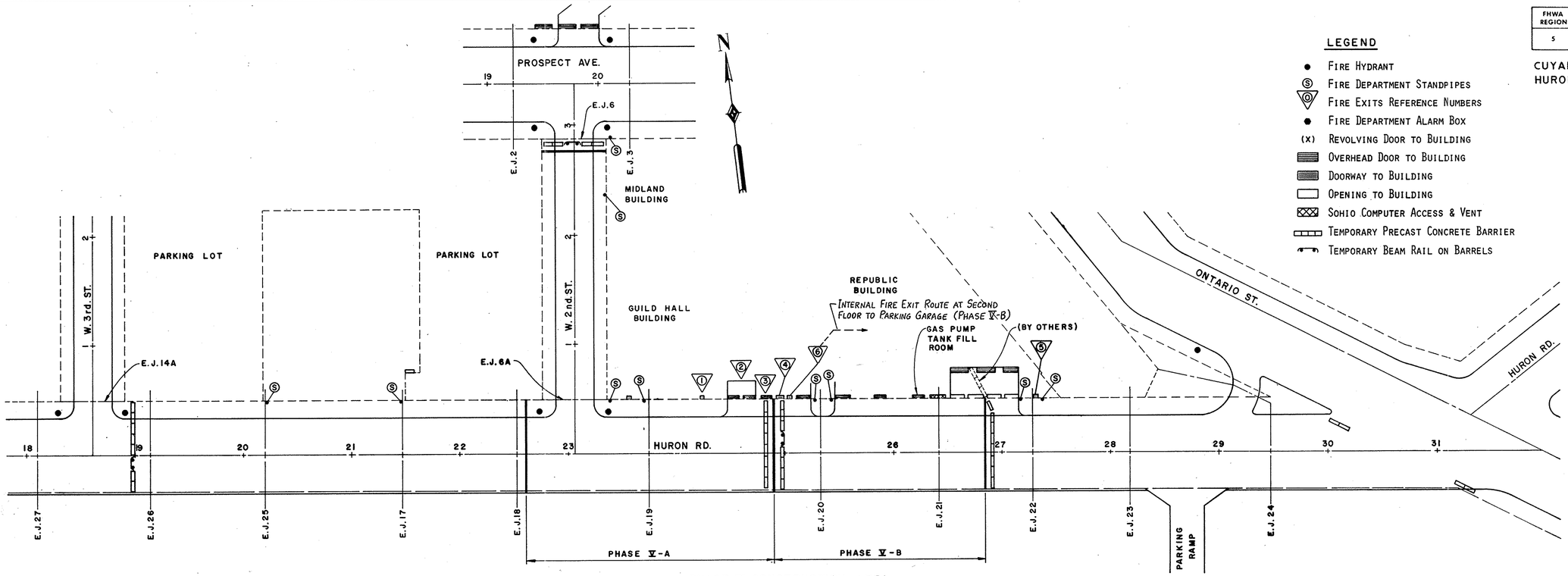

PHASE V CONSTRUCTION AREA

LEGEND

- Fire Hydrant
- Fire Department Standpipes
- Fire Exits Reference Numbers
- Fire Department Alarm Box
- (X) Revolving Door to Building
- Overhead Door to Building
- Doorway to Building
- Opening to Building
- Sohio Computer Access & Vent
- Temporary Precast Concrete Barrier
- Temporary Beam Rail on Barrels

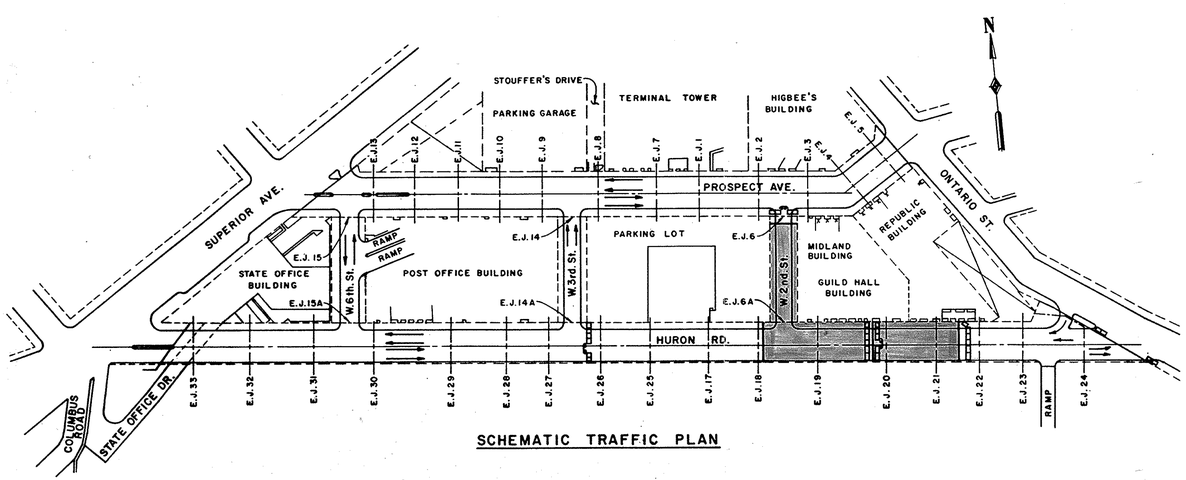

SCHEMATIC TRAFFIC PLAN

PHASE V CONSTRUCTION GENERAL NOTES

1. Access must be maintained to all fire hydrants and fire connections unless an acceptable alternate is approved
2. The Contractor shall maintain temporary lighting at all fire exits within the construction phase and provide a temporary safe route with lighting to guide pedestrians to safety outside of the construction phase limits.
3. Cold weather protection for the existing water pipes must be maintained during construction to guarantee availability of water supply for emergencies.
4. Guardrail on barrels shall be used and maintained by Contractor as access openings in the precast concrete barriers for emergency vehicles.
5. For details of Traffic Plans During Construction see Maintenance of Traffic Plans, Sheets 4 thru 9.
6. No materials or construction vehicles are to be stored or parked outside the barricaded areas at any time unless approved by the Engineer.
7. Fire Exits - These exits must be maintained during this phase construction. There are other fire exits not in this construction area that must be maintained by the individual building owners:
   - (1) Sohio Mail Room
   - (2) Sohio Loading Dock (Maintain 1 Door as Fire Exit)
   - (3) Huron Road Ress Entrance (Phase V-B)
   - (4) Huron Road Ress Entrance (Phase V-A)
   - (5) Republic Building
   - (6) Huron Road Ress Entrance (Phase V-A)

EUTHENICS INC.
CONSULTING ENGINEERS
CLEVELAND OHIO

REHABILITATION OF TOWER CITY BRIDGES
PROSPECT AVE., HURON ROAD,
WEST 2ND., 3RD. & 6TH. ST. VIADUCTS

FIRE SAFETY PLAN
PHASE V CONSTRUCTION

CLEVELAND CUYAHOGA COUNTY OHIO

Mode LJD	Trcd. JSC	Ckd. LJD	Rev. RAB	Scale: No Scale
Date 1-28-83	Date 1-31-83	Date 2-1-83	Date 2-2-83	Sheet 149 / 170

FHWA REGION	STATE	PROJECT	
5	OHIO	M-ID99(9)	

150/170

CUYAHOGA COUNTY
HURON/PROSPECT BRIDGE

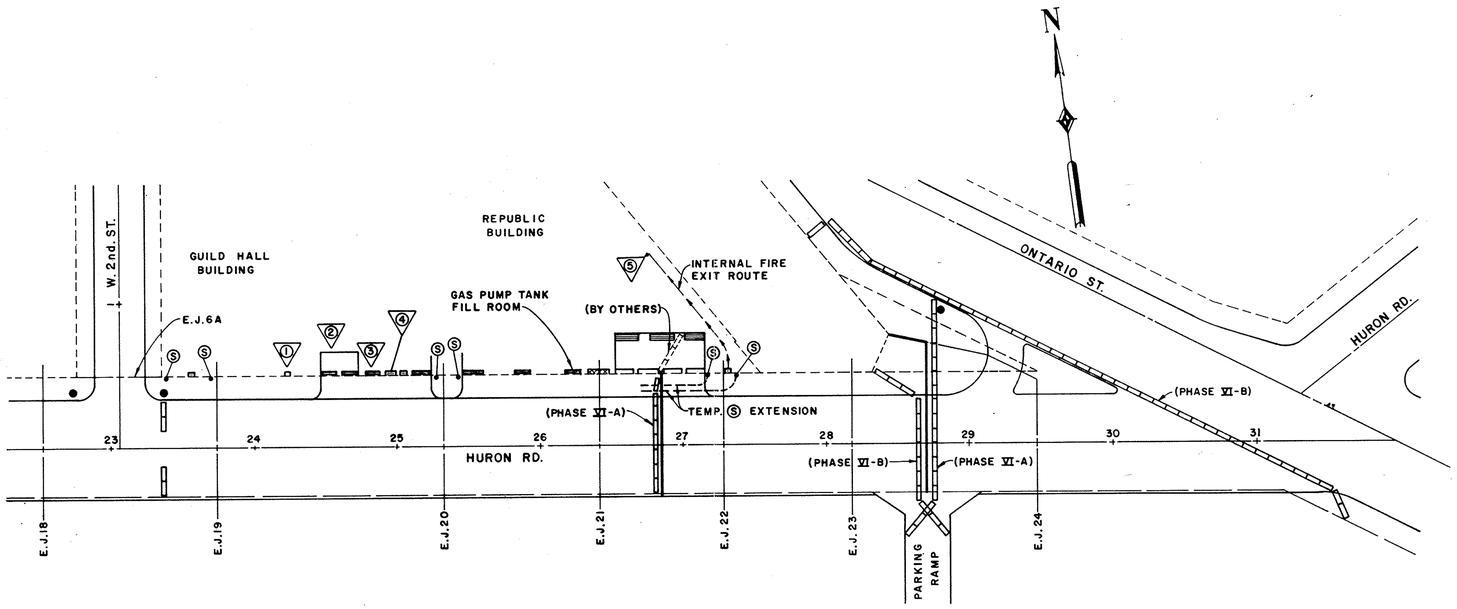

PHASE VI CONSTRUCTION AREA

PHASE VI CONSTRUCTION GENERAL NOTES

1. ACCESS MUST BE MAINTAINED TO ALL FIRE HYDRANTS AND FIRE CONNECTIONS UNLESS AN ACCEPTABLE ALTERNATE IS APPROVED
2. THE CONTRACTOR SHALL MAINTAIN TEMPORARY LIGHTING AT ALL FIRE EXITS WITHIN THE CONSTRUCTION PHASE AND PROVIDE A TEMPORARY SAFE ROUTE WITH LIGHTING TO GUIDE PEDESTRIANS TO SAFETY OUTSIDE OF THE CONSTRUCTION PHASE LIMITS.
3. COLD WEATHER PROTECTION FOR THE EXISTING WATER PIPES MUST BE MAINTAINED DURING CONSTRUCTION TO GUARANTEE AVAILABILITY OF WATER SUPPLY FOR EMERGENCIES.
4. GUARDRAIL ON BARRELS SHALL BE USED AND MAINTAINED BY CONTRACTOR AS ACCESS OPENINGS IN THE PRECAST CONCRETE BARRIERS FOR EMERGENCY VEHICLES.
5. FOR DETAILS OF TRAFFIC PLANS DURING CONSTRUCTION SEE MAINTENANCE OF TRAFFIC PLANS, SHEETS 4 THRU 9.
6. NO MATERIALS OR CONSTRUCTION VEHICLES ARE TO BE STORED OR PARKED OUTSIDE THE BARRICADED AREAS AT ANY TIME UNLESS APPROVED BY THE ENGINEER.
7. FIRE EXITS - THESE EXITS MUST BE MAINTAINED DURING THIS PHASE CONSTRUCTION. THERE ARE OTHER FIRE EXITS NOT IN THIS CONSTRUCTION AREA THAT MUST BE MAINTAINED BY THE INDIVIDUAL BUILDING OWNERS:

   - (1) SOHIO MAIL ROOM
   - (2) SOHIO LOADING DOCK (MAINTAIN 1 DOOR AS FIRE EXIT)
   - (3) HURON ROAD RESS ENTRANCE (PHASE V-A)
   - (4) HURON ROAD RESS ENTRANCE (PHAVE V-B)
   - (5) REPUBLIC BUILDING (RE-ROUTE INTERNALLY TO EXIT INTO PARKING GARAGE)

LEGEND

- ● FIRE HYDRANT
- (S) FIRE DEPARTMENT STANDPIPES
- (0) FIRE EXITS REFERENCE NUMBERS
- ● FIRE DEPARTMENT ALARM BOX
- (X) REVOLVING DOOR TO BUILDING
- OVERHEAD DOOR TO BUILDING
- DOORWAY TO BUILDING
- OPENING TO BUILDING
- SOHIO COMPUTER ACCESS & VENT
- TEMPORARY PRECAST CONCRETE BARRIER
- TEMPORARY BEAM RAIL ON BARRELS

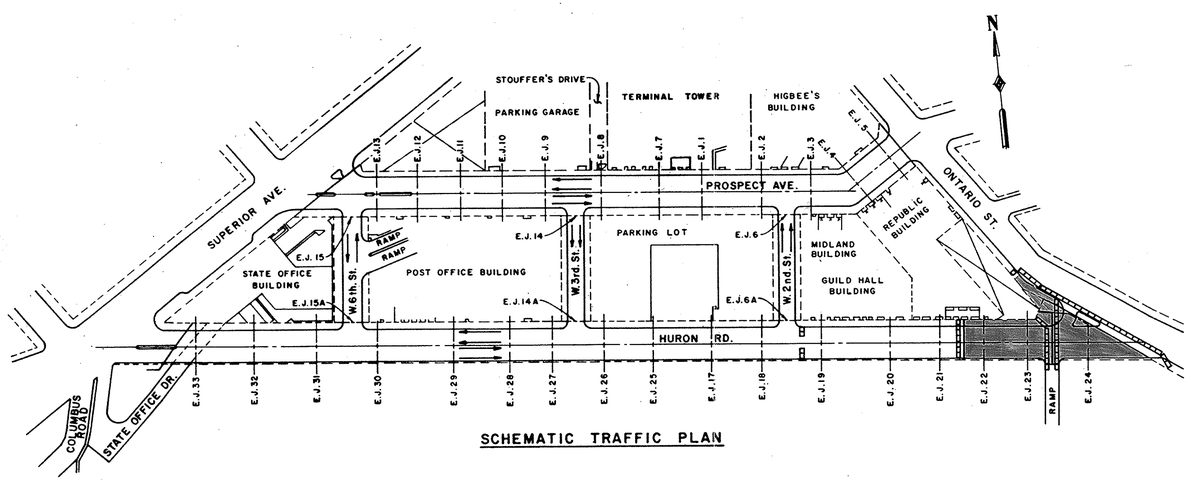

SCHEMATIC TRAFFIC PLAN

EUTHENICS INC.
CONSULTING ENGINEERS
CLEVELAND OHIO

REHABILITATION OF TOWER CITY BRIDGES
PROSPECT AVE., HURON ROAD,
WEST 2ND., 3RD. & 6TH. ST. VIADUCTS

FIRE SAFETY PLAN
PHASE VI CONSTRUCTION

CLEVELAND CUYAHOGA COUNTY OHIO

Mode LJD	Trcd. JSC	Ckd. LJD	Rev. RAB	Scale: No Scale
Date 1-31-83	Date 2-1-83	Date 2-2-83	Date 2-3-83	Sheet 150 / 170

FHWA REGION	STATE	PROJECT	
5	OHIO	M-ID99(9)	

151/170

CUYAHOGA COUNTY
HURON/PROSPECT BRIDGE

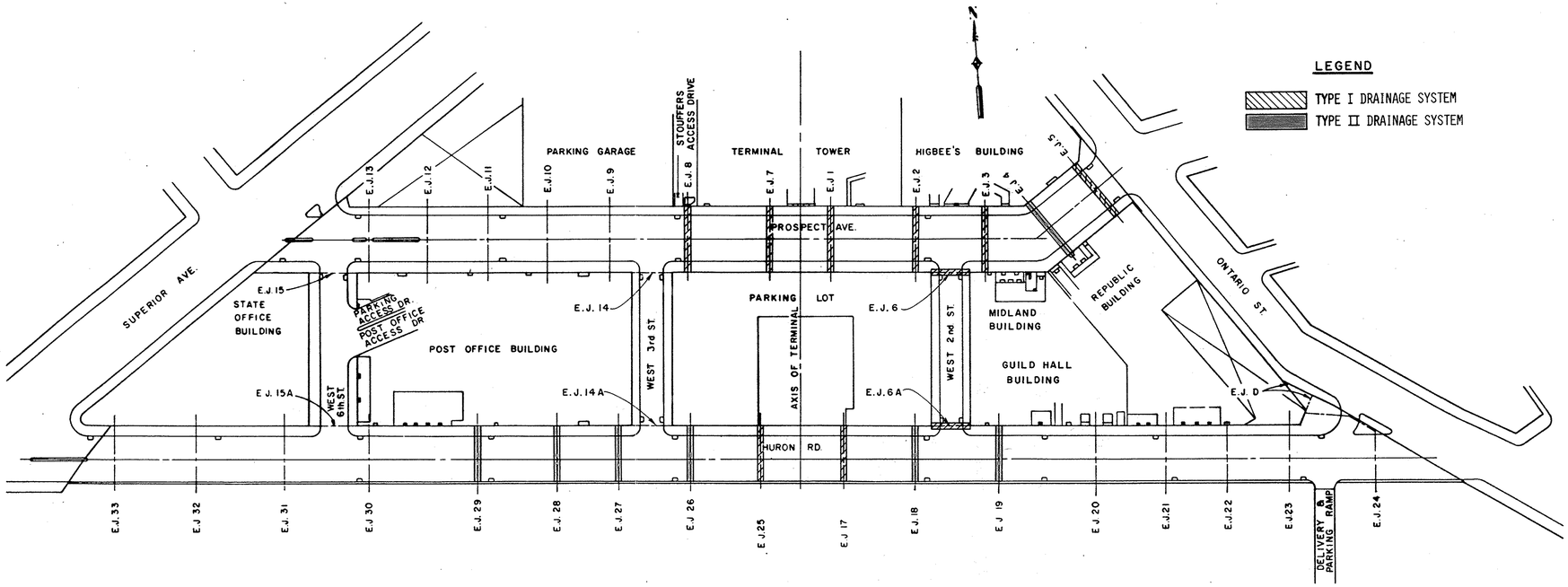

PLAN VIEW
STREET LEVEL

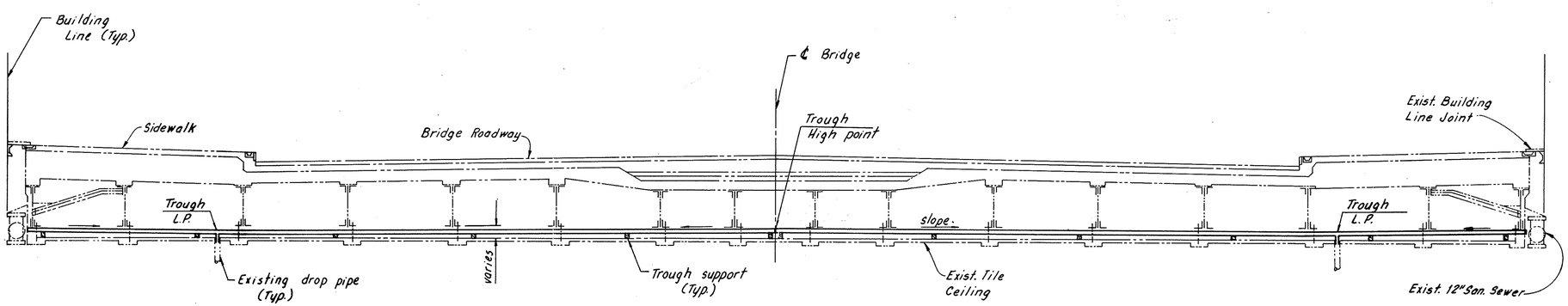

BRIDGE CROSS SECTION
(Typical at most expansion joints)

NOTE: FOR DETAILS OF TYPES I & II DRAINAGE SYSTEMS SEE SHEET 152.

EUTHENICS INC.
CONSULTING ENGINEERS
CLEVELAND OHIO

REHABILITATION OF TOWER CITY BRIDGES
PROSPECT AVE., HURON ROAD,
WEST 2ND., 3RD. & 6TH. ST. VIADUCTS

PROPOSED SECONDARY
DRAINAGE SYSTEM

CLEVELAND CUYAHOGA COUNTY OHIO

Made LJD	Trcd. REM	Ckd. LJD	Rev. RAB	Scale: No Scale
Date 1-6-83	Date 1-10-83	Date 1-11-83	Date 1-13-83	Sheet 151/170

FHWA REGION	STATE	PROJECT	
5	OHIO	M-ID99 (9)	

152/170

CUYAHOGA COUNTY
HURON/PROSPECT BRIDGE

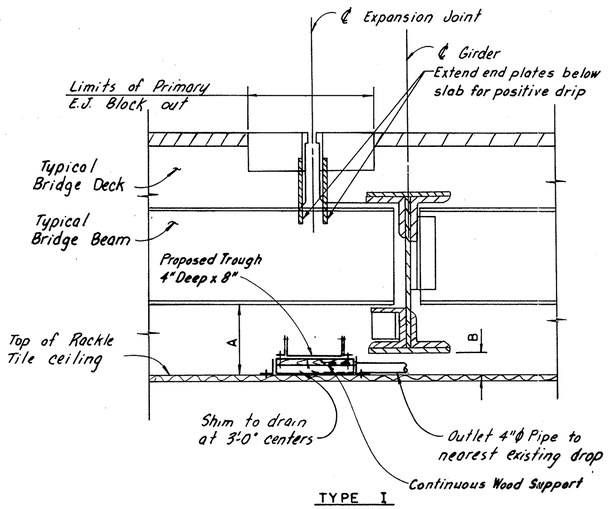

TYPE I

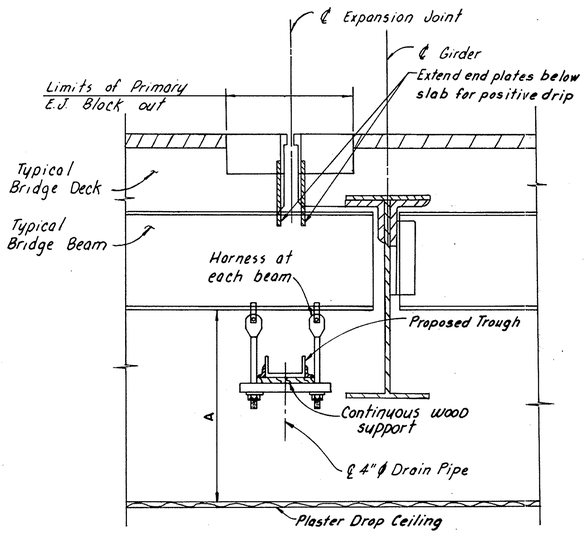

TYPE II

SECONDARY DRAINAGE AT STREET JOINT

GENERAL SUMMARY

Expansion Joint Number	Rubber Trough	Rubber End Dam 8 1/2" x 4 3/8"	3/4" Plywood Support 1'-1 1/2" Wide	3/8" Ø Hex Bolt Nut & Washer L 3 x 2 x 1/4 Galvanized	3/8" Concrete Wedge Anchor L 1 1/2 x 1 1/2 x 1/4	2- 3/8" Ø Concrete Wedge Anchors Galv. with L 6 x 4 x 3/8 and 1- 3/4" Ø Nut for 3/4" Ø Rod	I Beam Clamp	Fiberglass Support with 3/4" Rods & Covers	4" Ø PVC Drain Pipe	Flange Type I	Flange Type II	Galvanized Sheet Metal with 3/8" Ø x 1" Hex Bolt, Nut & Washer
	Lin.Ft.	Each	Lin.Ft.	Each	Each	Each	Each	Each	Lin.Ft.	Each	Each	Lin.Ft.
Prospect Ave.												
1	18	2	98	66	66	-	-	-	17	2	-	-
2	98	2	98	66	66	-	-	-	12	2	-	-
3	98	2	98	66	66	-	-	-	12	2	-	-
4	98	2	98	-	-	-	32	16	4	-	1	-
5	98	2	98	66	66	-	-	-	10	2	-	-
7	98	2	98	66	66	-	-	-	10	2	-	-
8	98	2	98	66	66	-	-	-	5	1	-	-
Huron Rd.												
17	83	2	83	56	56	-	-	-	20	1	-	-
18	83	2	83	28	-	-	28	14	10	-	2	-
19	83	4	83	28	-	56	-	14	10	-	2	-
25	83	2	83	56	56	-	-	-	5	1	-	-
26	83	4	83	28	-	56	-	14	16	-	2	-
27	83	4	83	28	-	56	-	14	11	-	2	-
28	83	2	83	28	-	56	-	14	10	-	2	-
29	83	2	83	28	-	56	-	14	40	-	1	-
West 2nd. St.												
6	59	2	59	24	-	-	24	12	8	-	1	59
6A	59	2	59	24	-	-	24	12	8	-	1	59
TOTALS	1,468	40	1,468	724	508	280	108	124	208	13	14	118

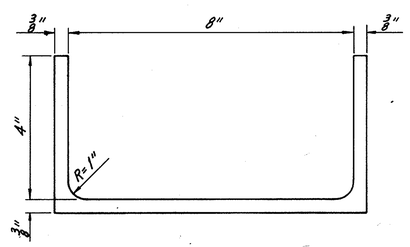

RUBBER TROUGH
80 DUROMETER
Scale: 1/2"=1"

NOTE:
For Dimensions A and B see Table on Sheet 153.

NOTES:

The rubber trough shall be 80 Durometer SBR Compound as manufactured by Watson Bowman, Inc. of 95 Pineview Drive, Amherst, New York (716) 691-7566.

The joint compound for the trough sections, end dams and sealant, as per Plans, shall be Sikaflex 1A 1 Component Polyurethane Sealant as manufactured by Sika Chemical Corporation and supplied by The Bodwell-Lemmin Company 10701 Broadway Avenue, Cleveland, Ohio 44125 (216) 883-0900.

All hardware shall be galvanized.

All drain pipe shall be PVC Schedule 40 as per Plan. The total length of pipe in the Plans includes all incidentals such as reducer couplings, bends and couplings, P-70 primer and heavy-weight Schedule 80 cement necessary to complete the installation as per Plans.

The hangers in the Type II installations shall be as manufactured by the Condux International, Inc. Company and supplied by Northwest Utility Marketing, Inc. 14701 Pioneer Trail, Eden Prarie, Minnesota (612) 944-2414 and shall include fiberglass tubing, 3/4" Ø rods and covers, nut washers and bolts and I beam clamps.

Payment for the work as described herein will be made at the contract lump sum unit price for Item Special, Secondary Drainage System. The lump sum price bid shall include the full cost of all labor, materials and equipment necessary to complete the work as per Plan and specified herein.

EUTHENICS INC.
CONSULTING ENGINEERS
CLEVELAND OHIO

REHABILITATION OF TOWER CITY BRIDGES
PROSPECT AVE., HURON ROAD,
WEST 2ND., 3RD. & 6TH. ST. VIADUCTS

PROPOSED SECONDARY DRAINAGE SYSTEM

CLEVELAND CUYAHOGA COUNTY OHIO

Made LJD	Trcd. REM	Ckd. LJD	Rev. RAB	Revised No Scale
Date 1-5-83	Date 1-7-83	Date 1-10-83	Date 1-12-83	Sheet 152/170

FHWA REGION	STATE	PROJECT	
5	OHIO	M-ID99(9)	

153
170

CUYAHOGA COUNTY
HURON/PROSPECT BRIDGE

PROPOSED SECONDARY DRAINAGE SYSTEM

STREET	EXPAN. JOINT	DIMENSION (INCHES) A	DIMENSION (INCHES) B	TROUGH TYPE	REMARKS
PROSPECT AVE	1	8"	N/A	I	DRAIN BAY 1 TO BAY 3, BAY 4 TO BAY 3 - SIDE OUTLET TO 4" DROP EAST, 12 LIN. FT. DRAIN BAY 5 TO BAY 14, BAY 15 TO BAY 14 - SIDE OUTLET TO 4" DROP WEST, 5 LIN. FT.
	2	15"	6	I	DRAIN BAY 1 TO BAY 3, BAY 5 TO BAY 3 - SIDE OUTLET TO 4" DROP EAST, 6 LIN. FT. DRAIN BAY 5 TO BAY 13, BAY 15 TO BAY 13 - SIDE OUTLET TO 4" DROP EAST, 6 LIN. FT.
	3	15"	5	I	DRAIN BAY 1 TO BAY 3, BAY 5 TO BAY 3 - SIDE OUTLET TO 4" DROP WEST, 7 LIN. FT. DRAIN BAY 5 TO BAY 14, BAY 15 TO BAY 14 - SIDE OUTLET TO 4" DROP WEST, 5 LIN. FT.
	4	4" TO 8"	-	II	EXISTING DROP PLASTER CEILING 5'-6" BELOW DECK DRAIN BAY 1 TO BAY 3, BAY 15 TO BAY 3 - BOTTOM OUTLET TIE INTO EXISTING 3" PVC BELOW
	5	8"	5	I	DRAIN BAY 1 TO BAY 2, BAY 8 TO BAY 2 - SIDE OUTLET TO 8" DROP EAST, 5 LIN. FT. DRAIN BAY 15 TO BAY 14, BAY 8 TO BAY 14 - SIDE OUTLET TO 8" DROP EAST, 5 LIN. FT.
	7	8"	5	I	DRAIN BAY 1 TO BAY 2, BAY 4 TO BAY 2 - SIDE OUTLET TO 4" DROP WEST, 5 LIN. FT. DRAIN BAY 5 TO BAY 14, BAY 15 TO BAY 14 - SIDE OUTLET TO 4" DROP WEST, 5 LIN. FT.
	8	15"	5	I	DRAIN BAY 1 TO BAY 3, BAY 15 TO BAY 3 - SIDE OUTLET TO 4" DROP WEST, 5 LIN. FT.
HURON RD.	17	20"	N/A	I	DRAIN BAY 1 TO BAY 2, BAY 13 TO BAY 2 - SIDE OUTLET TO 4" DROP WEST, 20 LIN. FT.
	18	21"	-	II	EXISTING DROP PLASTER CEILING 4' BELOW DECK DRAIN BAY 1 TO BAY 3, BAY 6 TO BAY 3 - BOTTOM OUTLET TO 4" DROP BELOW, 5 LIN. FT. DRAIN BAY 13 TO BAY 7 - BOTTOM OUTLET TO 4" DROP BELOW, 5 LIN. FT.
	19	48"	-	II	EXISTING DROP PLASTER CEILING 6' BELOW DECK - BEAMS CONCRETE ENCASED DRAIN BAY 1 TO BAY 7, BAY 9 TO BAY 7 - BOTTOM OUTLET TO 4" DROP EAST, 5 LIN. FT. DRAIN BAY 13 TO BAY 10, BOTTOM OUTLET TO 4" DRAIN BELOW, 5 LIN. FT.
	25	18"	N/A	I	DRAIN BAY 1 TO BAY 3, BAY 18 TO BAY 3 - SIDE OUTLET TO 4" DROP EAST, 5 LIN. FT.
	26	30"	-	II	EXISTING DROP PLASTER CEILING 4' TO 5' BELOW DECK - BEAMS CONCRETE ENCASED DRAIN BAY 1 TO BAY 3, BAY 9 TO BAY 3 - BOTTOM OUTLET TO 4" DROP WEST, 6 LIN. FT. DRAIN BAY 10 TO BAY 13 - BOTTOM OUTLET TO 4" DRAIN WEST, 10 LIN. FT.
	27	48"	-	II	EXISTING DROP PLASTER CEILING 5' TO 6' BELOW DECK - BEAMS CONCRETE ENCASED DRAIN BAY 1 TO BAY 3, BAY 4 TO BAY 3 - BOTTOM OUTLET TO 4" DRAIN WEST, 6 LIN. FT. DRAIN BAY 5 TO BAY 8, BAY 13 TO BAY 8 - BOTTOM OUTLET TO 4" DRAIN BELOW, 5 LIN. FT.
	28	48"	-	II	EXISTING DROP PLASTER CEILING 4' BELOW DECK - BEAMS CONCRETE ENCASED DRAIN BAY 1 TO BAY 3, BAY 8 TO BAY 3 - BOTTOM OUTLET TO 4" DROP WEST, 5 LIN. FT. DRAIN BAY 13 TO BAY 8 - BOTTOM OUTLET TO 4" DRAIN EAST, 5 LIN. FT.
	29	40"	-	II	EXISTING DROP PLASTER CEILING 3' TO 4' BELOW DECK - BEAMS CONCRETE ENCASED DRAIN BAY 13 TO BAY 10, BAY 1 TO BAY 10 - BOTTOM OUTLET TO 4" DROP WEST, 40 LIN. FT.
WEST 2ND STREET	6	36"	-	II	DRAIN BAY 1 TO BAY 9, BAY 11 TO BAY 9 - BOTTOM OUTLET TO 4" DRAIN SOUTH, 8 LIN. FT.
	6A	36"	-	II	DRAIN BAY 1 TO BAY 9, BAY 11 TO BAY 9 - BOTTOM OUTLET TO 4" DRAIN NORTH, 8 LIN. FT.

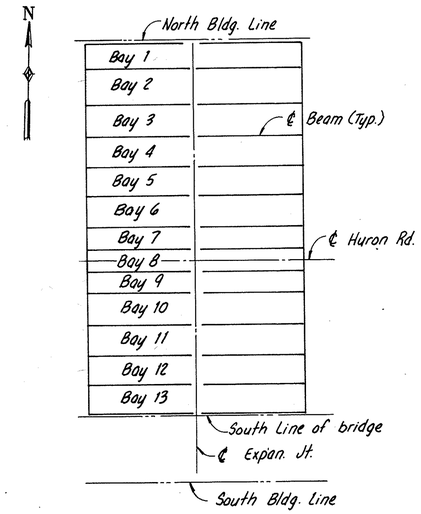

HURON RD.
STEEL FRAMING PLAN
(Bay arrangement)

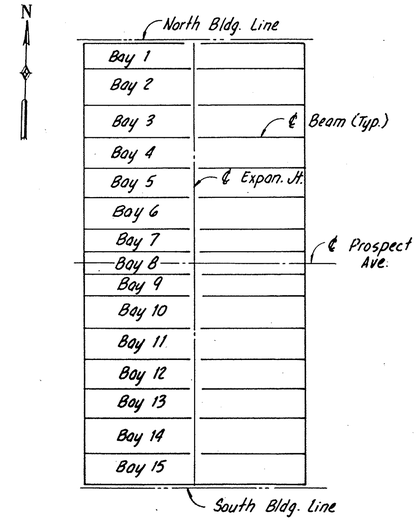

PROSPECT AVE.
STEEL FRAMING PLAN
(Bay arrangement)

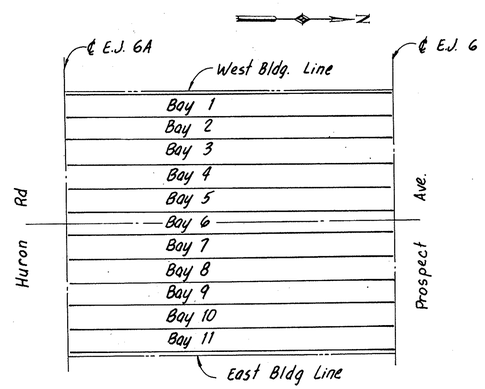

WEST 2nd ST.
STEEL FRAMING PLAN
(Bay arrangement)

NOTE:
FOR DETAILS OF TYPES I & II DRAINAGE SYSTEMS SEE SHEETS 152 & 154.

EUTHENICS INC.
CONSULTING ENGINEERS
CLEVELAND OHIO

REHABILITATION OF TOWER CITY BRIDGES
PROSPECT AVE., HURON ROAD,
WEST 2ND., 3RD. & 6TH. ST. VIADUCTS

PROPOSED SECONDARY
DRAINAGE SYSTEM

CLEVELAND CUYAHOGA COUNTY OHIO

Made LJD	Trcd. REM	Chd. LJD	Rev.	Scale: As Noted
Date 3-9-83	Date 3-16-83	Date 3-18-83	Date	Sheet 153 / 170

FHWA REGION	STATE	PROJECT	
5	OHIO	M-ID99 (9)	

154
170

CUYAHOGA COUNTY
HURON/PROSPECT BRIDGE

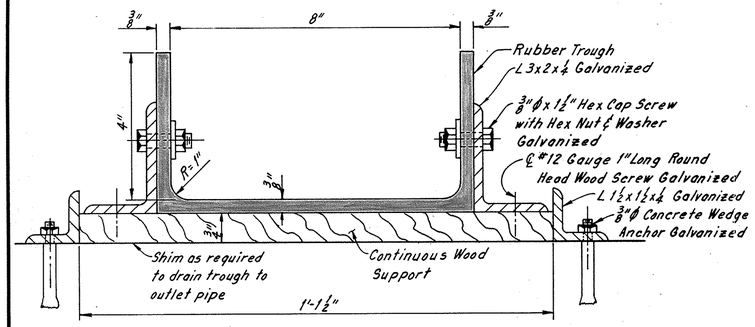

TYPICAL TYPE I DRAINAGE SYSTEM

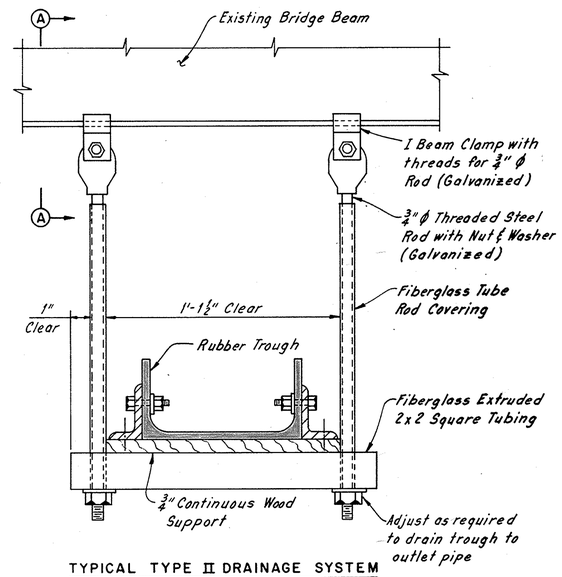

TYPICAL TYPE II DRAINAGE SYSTEM
(For additional Details see Type I System)

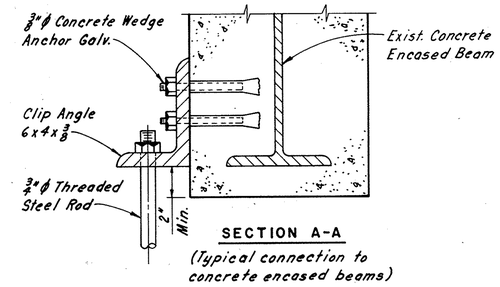

SECTION A-A
(Typical connection to concrete encased beams)

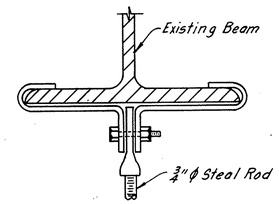

SECTION A-A
TYPICAL I BEAM CLAMP

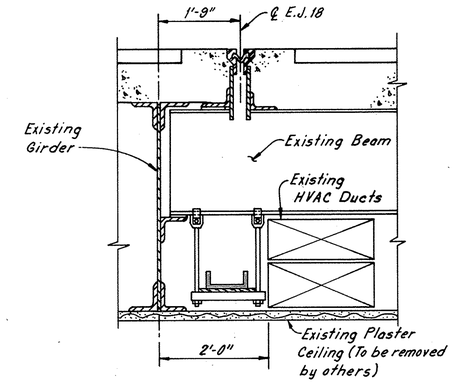

SECONDARY DRAINAGE SYSTEM
TYPE II AT EXPANSION JOINT 18
(Looking South)

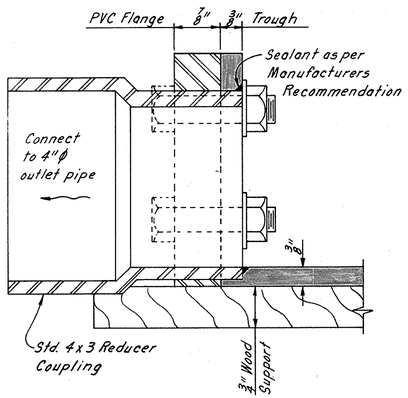

STANDARD DRAIN PIPE CONNECTION
FOR TYPE I DRAINAGE SYSTEM

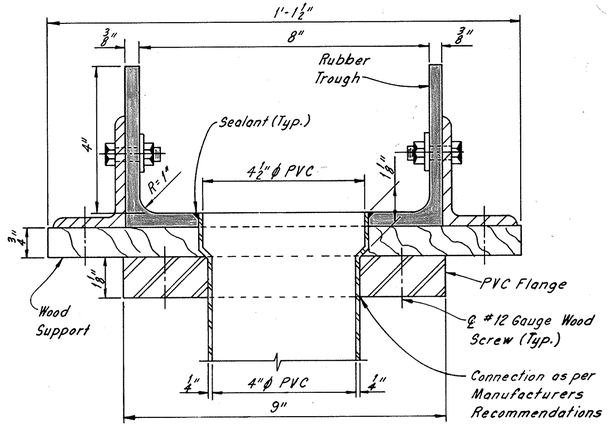

STANDARD DRAIN PIPE CONNECTION
FOR TYPE II DRAINAGE SYSTEM

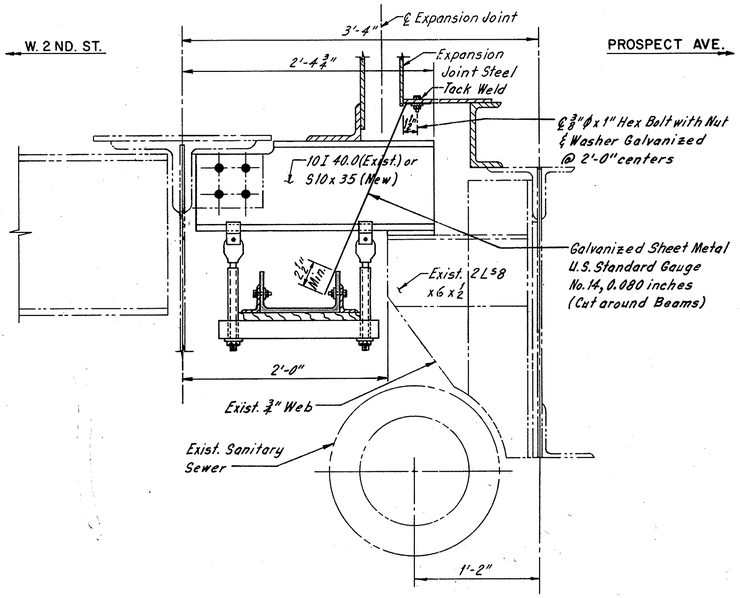

TYPE II DRAINAGE SYSTEM
PROSPECT AVE. & WEST 2nd. ST.
(Huron Rd. & West 2nd. St. similar)

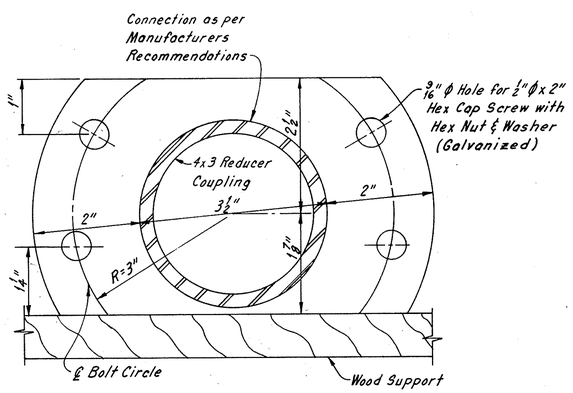

TYPICAL PVC FLANGE DETAIL
TYPE I

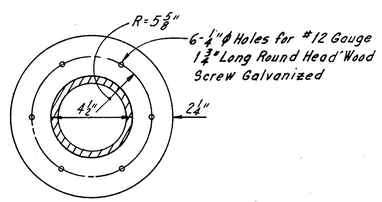

TYPICAL PVC FLANGE DETAIL
TYPE II

EUTHENICS INC.
CONSULTING ENGINEERS
CLEVELAND OHIO

REHABILITATION OF TOWER CITY BRIDGES
PROSPECT AVE., HURON ROAD,
WEST 2 ND., 3 RD. & 6 TH. ST. VIADUCTS

PROPOSED SECONDARY
DRAINAGE SYSTEM

CLEVELAND CUYAHOGA COUNTY OHIO

Made LJD	Trcd. JSC	Chd. LJD	Rev. RAB	Scale: No Scale
Date 3-17-83	Date 3-14-83	Date 3-15-83	Date 3-16-83	Sheet 154/170

I HEREBY CERTIFY THAT THIS PLAT IS A TRUE DELINEATION OF A SURVEY MADE FOR THE OHIO DEPARTMENT OF TRANSPORTATION.

IN _____

BY _____ REGISTERED SURVEYOR NO. _____

EUTHENICS, INC
CONSULTING ENGINEERS

DATE _____

SIGNED _____
DISTRICT DEPUTY DIRECTOR
OHIO DEPARTMENT OF TRANSPORTATION

DATE _____

CENTER LINE SURVEY PLAT

CITY OF CLEVELAND

100 0 100 200
SCALE IN FEET

LEGEND

(00) DESIGNATES ORIGINAL LOT NUMBERS
● NEW CENTERLINE MONUMENT ASSEMBLY TO BE PROVIDED.

FHWA REGION	STATE	PROJECT	
5	OHIO	M-ID99(9)	

155/170

CUYAHOGA COUNTY
HURON/PROSPECT BRIDGE
R/W PLANS

R/W 1/16

NOTE: ALL DIMENSION AND BEARINGS ARE PLAN EXCEPT AS NOTED.

CONVENTIONAL SIGNS

WORK AGREEMENT —WA—WA—
LEASE BOUNDRY —L—L—
AERIAL —AERIAL R/W—

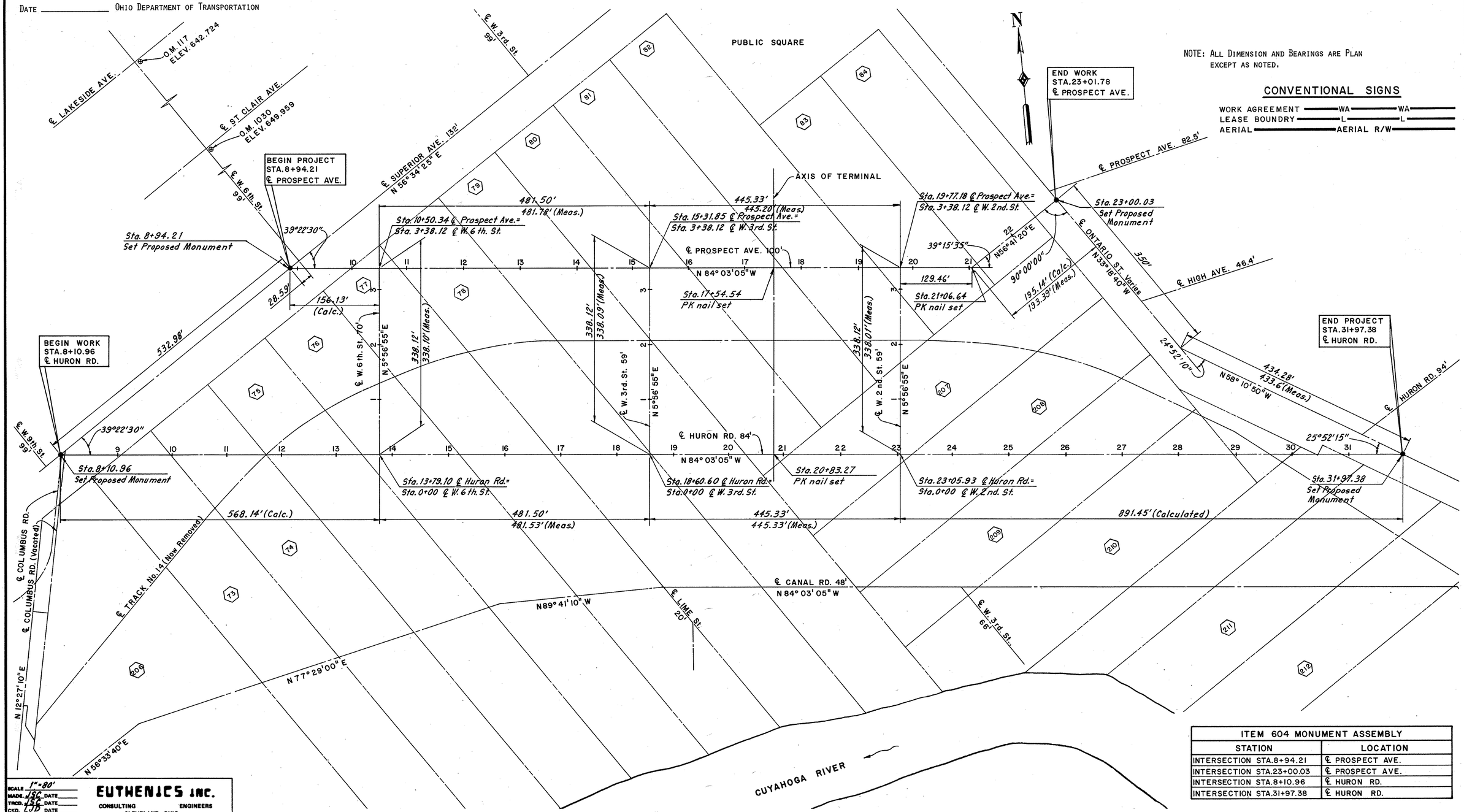

ITEM 604 MONUMENT ASSEMBLY	
STATION	LOCATION
INTERSECTION STA. 8+94.21	℄ PROSPECT AVE.
INTERSECTION STA. 23+00.03	℄ PROSPECT AVE.
INTERSECTION STA. 8+10.96	℄ HURON RD.
INTERSECTION STA. 31+97.38	℄ HURON RD.

SCALE 1"=80'
MADE. JSC DATE
TRCD. JSC DATE
CKD. JJP DATE

EUTHENICS INC.
CONSULTING ENGINEERS
CLEVELAND OHIO

PROPERTY MAP

100 0 100 200
SCALE IN FEET

FHWA REGION	STATE	PROJECT	
5	OHIO	M-ID99(9)	

156/170

CUYAHOGA COUNTY
HURON / PROSPECT BRIDGE
R/W PLANS SHEET 1 OF 3

R/W 2/16

LEGEND

- Access Holes thru drop ceiling to crawl space under Bridge Deck
- E.J. Expansion Joint locations in Bridge Deck
- Indicates Elev. 52.0 Level
- (10) TOWER CITY PROPERTIES
- (11) OHIO BUILDING AUTHORITY
- (12) UNITED STATES OF AMERICA
- (13) PUBLIC SQUARE COMMUNITY URBAN REDEVELOPMENT CORP.
- (14) THE HIGBEE COMPANY
- (15) BANKER'S TRUST COMPANY
- (17) TERMINAL INVESTMENTS INC.

PARCEL NUMBER KEY

10 B - 100 - WA
OWNER — ELEVATION LEVEL — INTEREST TO BE ACQUIRED

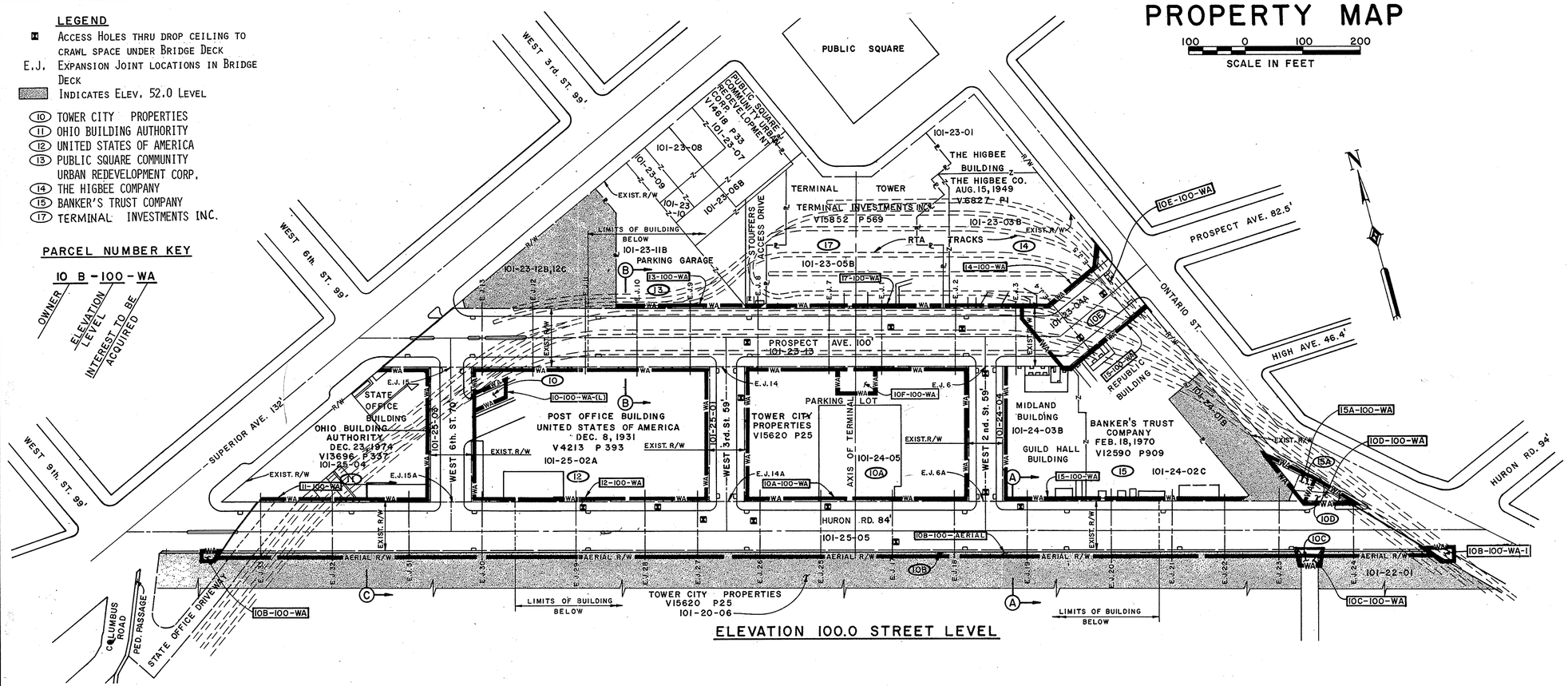

ELEVATION 100.0 STREET LEVEL

NOTES:

The City of Cleveland is responsible for the maintenance, repair and reconstruction of the following portions of the bridges:

1. The roadway pavement and concrete base above the waterproofing protection.
2. The sidewalk surface, concrete base and curb above the waterproofing protection.
3. The expansion joints across the roadway and sidewalks including the drainage lines from the expansion joints to the sewers under the track level.
4. The street lighting poles and attachments.
5. The conduits and cables of the Municipal Light and Power Department.
6. The gutter receiving basins and the drainage lines running from the basins to the sewers under the track level.
7. The Sanitary sewer pipes located along the sides of the bridge.

8. For Utility Owners see Sheet 3/16.

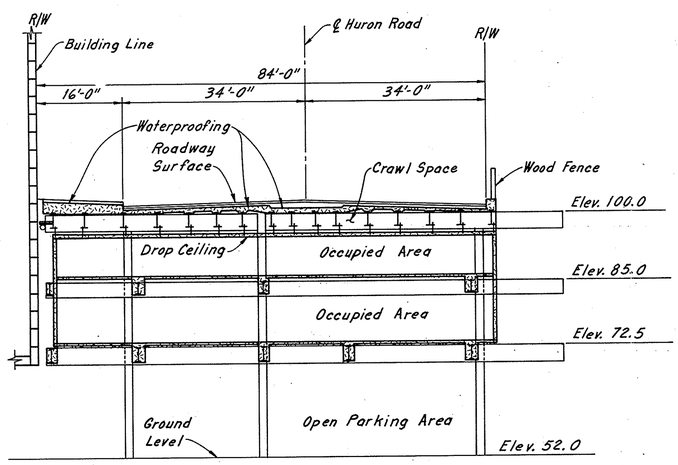

SECTION A-A
TYPICAL ELEVATION

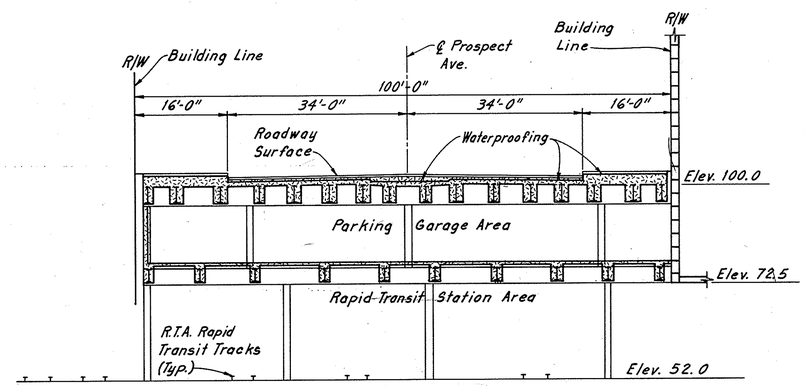

SECTION B-B
TYPICAL ELEVATION

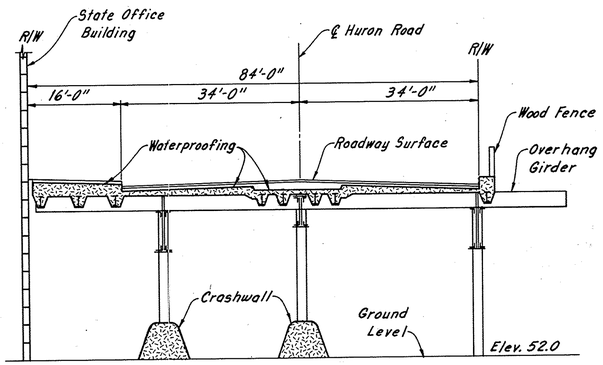

SECTION C-C
TYPICAL ELEVATION

NAME	REVISION	DATE

SCALE 1"=100'
MADE LJD DATE
TRCD. JSC DATE
CKD. JSC DATE

EUTHENICS INC.
CONSULTING ENGINEERS
CLEVELAND OHIO

RIGHT OF WAY PROPERTY MAP

PROPERTY MAP

100 0 100 200
SCALE IN FEET

FHWA REGION	STATE	PROJECT	
5	OHIO	M-ID99(9)	

157/170

CUYAHOGA COUNTY
HURON/PROSPECT BRIDGE
R/W PLANS SHEET 2 OF 3

R/W 3/16

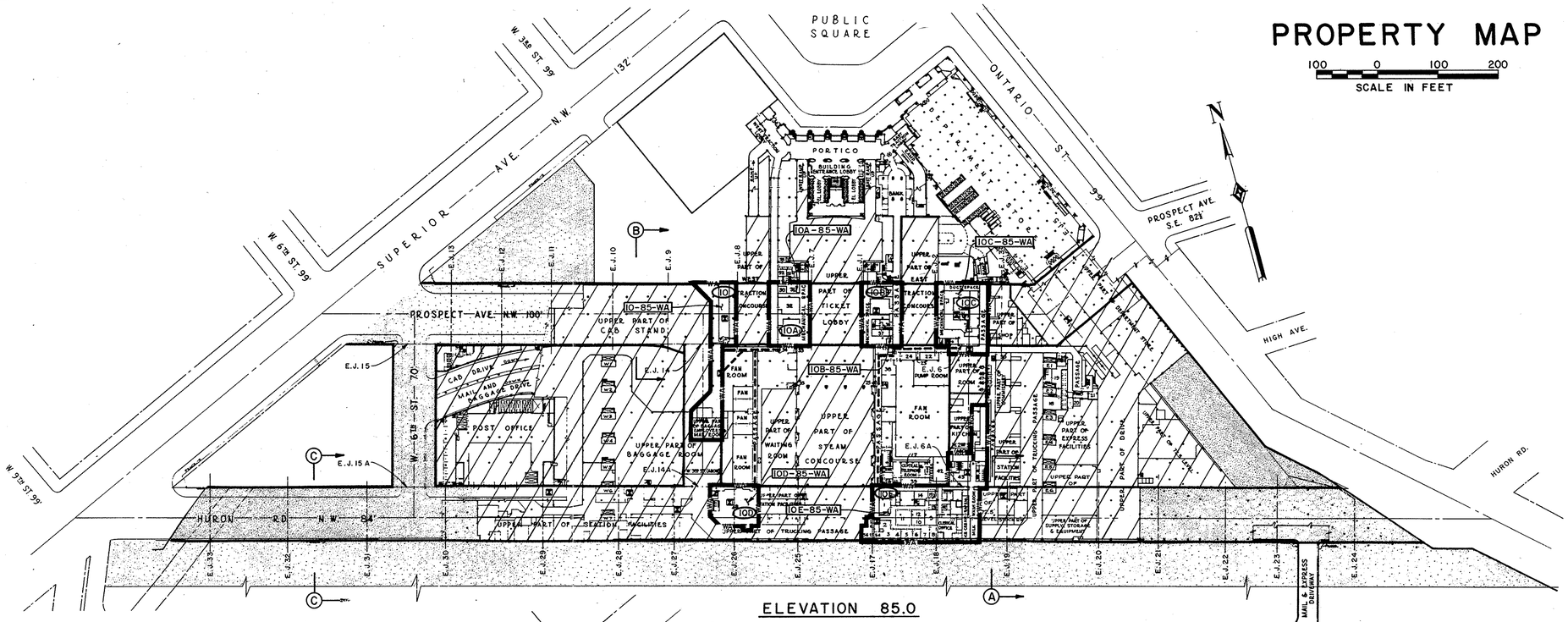

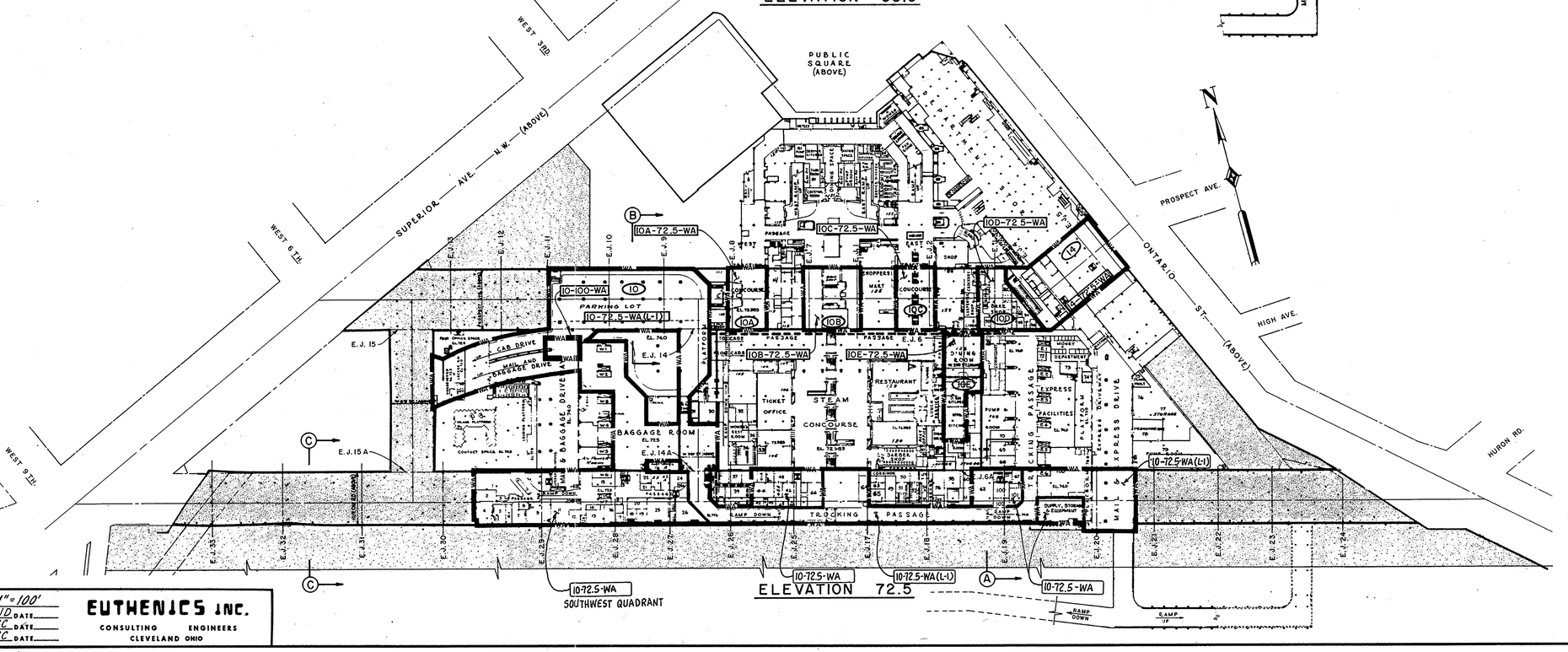

LEGEND

- ▣ ACCESS HOLES THRU DROP CEILING TO CRAWL SPACE UNDER BRIDGE DECK
- E.J. EXPANSION JOINT LOCATIONS IN BRIDGE DECK
- INDICATES ELEV. 72.5 LEVEL
- INDICATES ELEV. 52.0 LEVEL
- (10) TOWER CITY PROPERTIES

PARCEL NUMBER KEY

10 B -100 -WA

OWNER / ELEVATION LEVEL / INTEREST TO BE ACQUIRED

UTILITY OWNERS	
TYPE	NAME & ADDRESS
WATER	MR. WILLIAM J. SWEENEY DEPARTMENT OF PUBLIC UTILITIES DIVISION OF WATER AND HEAT 1201 LAKESIDE AVE. CLEVELAND, OHIO 44114
ELECTRIC	MR. T.C. REIDY MUNICIPAL ELECTRIC LIGHT & POWER 1201 LAKESIDE AVE. DIVISION OF LIGHT & POWER ROOM 322 CLEVELAND, OHIO 44114
ELECTRIC	MR. R.H. HOHERTZ CLEVELAND ELECTRIC ILLUMINATING COMPANY P.O. BOX 5000 ROOM 491 CLEVELAND, OHIO 44101
TELEPHONE	MR. KEN KUCZMA OHIO BELL TELEPHONE COMPANY 820 SUPERIOR AVE. N.W. ROOM 215 CLEVELAND, OHIO 44113
TELEGRAPH	MR. PETE FEDDARS WESTERN UNION TELEGRAPH COMPANY 9405 MIDWEST AVE. GARFIELD HTS. OHIO 44125
GAS	MR. RICHARD GENDER EAST OHIO GAS COMPANY 1717 EAST NINTH STREET CLEVELAND, OHIO 44114

LEGEND

- ▣ ACCESS HOLES THRU DROP CEILING TO CRAWL SPACE UNDER BRIDGE DECK
- E.J. EXPANSION JOINT LOCATIONS IN BRIDGE DECK
- INDICATES ELEV. 52.0 LEVEL
- (10) TOWER CITY PROPERTIES
- (14) THE HIGBEE COMPANY
- WA *Work Agreement*
- *Passageways*

NOTE:
FOR SECTIONS A-A, B-B AND C-C SEE SHEET 2/16.

NAME	REVISION	DATE

SCALE 1" = 100'
MADE LJD DATE
TRCD JSC DATE
CKD. JSC DATE

EUTHENICS INC.
CONSULTING ENGINEERS
CLEVELAND OHIO

RIGHT OF WAY PROPERTY MAP

PROPERTY MAP

FHWA REGION	STATE	PROJECT	
5	OHIO	M-ID99(9)	

158/170

CUYAHOGA COUNTY
HURON/PROSPECT BRIDGE
R/W PLANS SHEET 3 OF 3

R/W 4/16

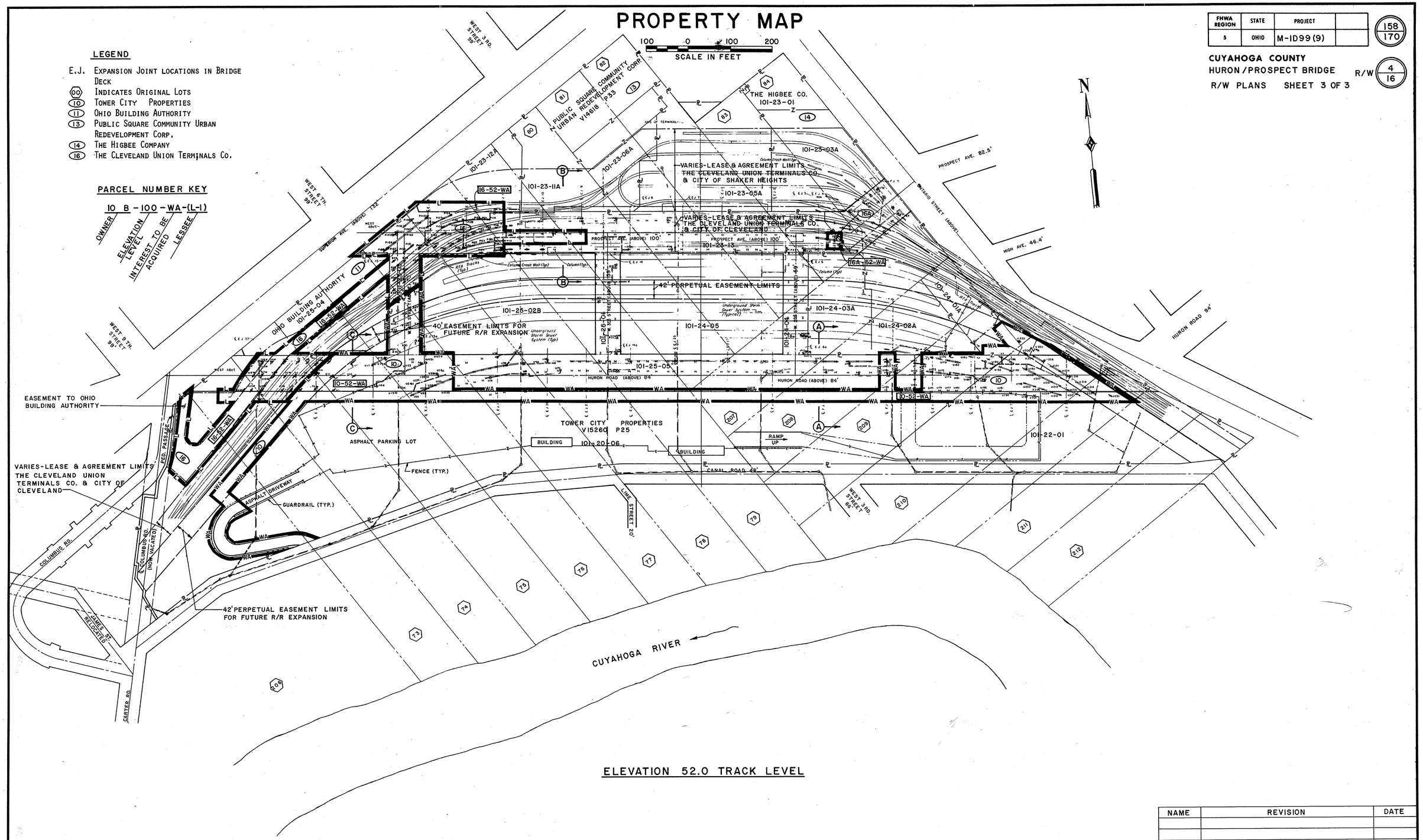

NAME	REVISION	DATE

SCALE 1"=100'
MADE LJD DATE
TRCD. JSC DATE
CKD. JSC DATE

EUTHENICS INC.
CONSULTING ENGINEERS
CLEVELAND OHIO

RIGHT OF WAY PROPERTY MAP

STATE	PROJECT
OHIO	M-ID99(9)

159/170

CUYAHOGA COUNTY
HURON/PROSPECT BRIDGE
R/W PLANS

R/W 5/16

Total Number of
8 Ownerships
0 Total Takes
8 Ownership with Structures involved
0 Ownership with "P" Items

SUMMARY OF ADDITIONAL RIGHT OF WAY REQUIRED

PARCEL NO.	OWNER	PERM. PARCEL NO.	TYPE FUNDS	DEED RECORD BOOK	DEED RECORD PAGE	DEED AREA	TOTAL P.R.O.	TOTAL TAKE	P.R.O. INTAKE	NET TAKE LAND	NET TAKE BLDG.	LEFT RESIDUE NET	LEFT RESIDUE P.R.O.	RIGHT RESIDUE NET	RIGHT RESIDUE P.R.O.	SHEET NO.	EXISTING USE	REMARKS
10-100-WA	The Kassouf Parking Company (Lessee)																Parking Garage - Ticket Booth	Temporary Use of Ticket Booth & Access Drive @ Bottom of Ramp
	Tower City Properties (Owner)	101-25-02B		15260	25			2,400									Parking Garage - Ticket Booth & Access Dr.	Barricade Existing Ticket Booth at Top of Ramp
10-100-WA	Tower City Properties	101-25-02B		15260	25			810									Bldg. Joint - Parking Lot Prospect, W.2nd.,	
10A-100-WA	Tower City Properties	101-24-05		15260	25			1,249*									W. 3rd. & Huron	Building Expansion Joint Work
10B-100-Aerial	Tower City Properties	101-20-06&101-22-01		15260	25			6,257									----------	Proposed Additional Safety Curb & Parapet
10B-100-WA	Tower City Properties	101-20-06		15260	25			498									----------	Chain Link Fence & Curb Work
10B-100-WA-1	Tower City Properties	101-22-01		15260	25			398									----------	Chain Link Fence & Curb Work
10C-100-WA	Tower City Properties	101-20-06		15260	25			1,506									Joint Drive Ramp off Huron Rd.	Rebuild Driveway Apron, Expansion Joint, Safety Curb, Parapet & Fence
10D-100-WA	Tower City Properties	101-24-01B		5082	584			1,382									Sidewalk & Roadway on Bridge	Replace Sidewalk & Roadway & Repair Structural Steel
10E-100-WA	Tower City Properties	101-23-04A		15260 3985	25 596			17,882									Bridge Deck - Prospect Ave. East End	Misc. Repairs to Conc. Deck, Steel & Expansion Joints
10-85-WA	Tower City Properties							8,450									Fan Room & Piano Room Under Prospect Ave.	Possible Limits of Bridge Deck Repairs Above Ceiling**
10A-85-WA	Tower City Properties							6,400									Offices Under Prospect Ave.	Possible Limits of Bridge Deck Repairs Above Ceiling
10B-85-WA	Tower City Properties							6,400									Vault Room & Offices - Under Prospect Ave.	Possible Limits of Bridge Deck Repairs Above Ceiling**
10C-85-WA	Tower City Properties							8,790									Old Higbee Beauty Salon - Storage Under Prospect Ave.	Possible Limits of Bridge Deck Repairs Above Ceiling**
10D-85-WA	Tower City Properties							4,413									Old Dormatory - Under Huron Rd.	Possible Limits of Bridge Deck Repairs Above Ceiling**
10E-85-WA	Tower City Properties							19,620									Old Conrail Offices - Under Huron Rd. & West 2nd. St.	Possible Limits of Bridge Deck Repairs Above Ceiling**
10F-100-WA-	The Kassouf Parking Co. (Lessee) Tower City Properties (Owner)	101-24-05		15260	25			2,400									Entrance to Parking Area Elev. 100	Temporary Relocation of Entrance & Exit Drive
10-72.5-WA (L-1)	Tower City Properties							103,446									Under Prospect Ave. - Cab Stand, Baggage Drive Parking Lot includes Parking Access Under Old Post Office	Possible Limits of Repair to Bridge Deck Above
																	Under West 3rd. St. - Parking Access	Possible Limits of Repair to Bridge Deck Above
																	Under Huron Rd. - Old Railroad Offices, Trucking Passage, Lunch Room, Storage Rooms, Mail & Express Drive	Possible Limits of Repair to Bridge Deck Above**

* Indicates Linear Ft.
** Permission for Contractor to enter the Access Holes in Ceiling.

Scale
Made LJD Date
Trcd. JSC Date
Ckd. JSC Date

EUTHENICS INC.
Consulting Engineers
Cleveland Ohio

NAME	REVISION	DATE

SUMMARY OF ADDITIONAL R/W REQUIRED

STATE	PROJECT
OHIO	M-ID99(9)

160/170

CUYAHOGA COUNTY
HURON/PROSPECT BRIDGE
R/W PLANS

R/W 6/16

TOTAL NUMBER OF
8 OWNERSHIPS
0 TOTAL TAKES
8 OWNERSHIP WITH STRUCTURES INVOLVED
0 OWNERSHIP WITH "P" ITEMS

SUMMARY OF ADDITIONAL RIGHT OF WAY REQUIRED

PARCEL NO.	OWNER	PERM. PARCEL NO.	TYPE FUNDS	DEED RECORD BOOK	DEED RECORD PAGE	DEED AREA	TOTAL P.R.O.	TOTAL TAKE	P.R.O. INTAKE	NET TAKE LAND	NET TAKE BLDG.	LEFT RESIDUE NET	LEFT RESIDUE P.R.O.	RIGHT RESIDUE NET	RIGHT RESIDUE P.R.O.	SHEET NO.	EXISTING USE	REMARKS
10-72.5-WA	TOWER CITY PROPERTIES (OWNER)							46,869									STORAGE AREAS OCCUPIED AND UNOCCUPIED OFFICES: S.W. QUAD. STA. FACILITIES, LUNCH ROOM & STORAGE AREA	POSSIBLE LIMITS OF REPAIR ABOVE CEILING
10A-72.5-WA	TOWER CITY PROPERTIES							6,200									CONCOURSE - WEST UNDER PROSPECT AVE.	POSSIBLE LIMITS OF REPAIR TO BRIDGE DECK ABOVE
																	ENTRANCE & EXIT DOORS FROM CAB STAND TO CONCOURSE	POSSIBLE LIMITS OF BRIDGE DECK REPAIRS ABOVE CEILING
10B-72.5-WA	TOWER CITY PROPERTIES							9,400									CONCOURSE - CENTER UNDER PROSPECT AVE.	POSSIBLE LIMITS OF REPAIR TO BRIDGE DECK ABOVE
																	ENTRANCE & EXIT STAIRS TO TRAINS BELOW	POSSIBLE LIMITS OF BRIDGE DECK REPAIRS ABOVE CEILING
10C-72.5-WA	TOWER CITY PROPERTIES							6,200									CONCOURSE - EAST UNDER PROSPECT AVE.	POSSIBLE LIMITS OF REPAIR TO BRIDGE DECK ABOVE
																	TWO STAIRWAYS (NOT IN USE) TO TRACKS BELOW	POSSIBLE LIMITS OF BRIDGE DECK REPAIRS ABOVE CEILING
10D-72.5-WA	TOWER CITY PROPERTIES							6,980									STORAGE AREAS - UNDER PROSPECT AVE.	POSSIBLE LIMITS OF BRIDGE DECK REPAIRS ABOVE CEILING
10E-72.5-WA	TOWER CITY PROPERTIES							9,764									ENGLISH OAK ROOM DINING ROOM & KITCHEN - UNDER WEST 2ND. ST.	POSSIBLE LIMITS OF BRIDGE DECK REPAIRS ABOVE CEILING
10-52-WA	TOWER CITY PROPERTIES	101-20-06&101-22-01		15260	25			65,591									NORTH OF CANAL ROAD - PARKING LOT	ENTIRE AREA TO BE USED FOR ACCESS TO REPAIR & PAINT THE STRUCTURES. AREAS MAY BE DESIGNATED TO STORE EQUIPMENT AND/OR SUPPLIES IF NEEDED
		101-25-03		15260	25			10,018									BELOW W. 6TH. ST. - NOT USED	
		101-25-05		15260	25			72,867									BELOW HURON ROAD - PARKING LOT	

* INDICATES LINEAR FT.
** PERMISSION FOR CONTRACTOR TO ENTER THE ACCESS HOLES IN CEILING.

SCALE
MADE LJD DATE
TRCD. JSC DATE
CKD. JSC DATE

EUTHENICS INC.
CONSULTING ENGINEERS
CLEVELAND OHIO

NAME	REVISION	DATE

SUMMARY OF ADDITIONAL R/W REQUIRED

STATE	PROJECT
OHIO	M-ID99 (9)

161 / 170

CUYAHOGA COUNTY
HURON/PROSPECT BRIDGE
R/W PLANS

R/W 7 / 16

Total Number of
8 Ownerships
0 Total Takes
8 Ownership with Structures involved
0 Ownership with "P" Items

SUMMARY OF ADDITIONAL RIGHT OF WAY REQUIRED

PARCEL NO.	OWNER	PERM. PARCEL NO.	TYPE FUNDS	DEED RECORD BOOK	DEED RECORD PAGE	DEED AREA	TOTAL P.R.O.	TOTAL TAKE	P.R.O. INTAKE	NET TAKE LAND	NET TAKE BLDG.	LEFT RESIDUE NET	LEFT RESIDUE P.R.O.	RIGHT RESIDUE NET	RIGHT RESIDUE P.R.O.	SHEET NO.	EXISTING USE	REMARKS
11-100-WA	The Ohio Building Authority	101-25-04		13696	337			628*									Walkways & Drives	Area used for Barricades
12-100-WA	United States of America	101-25-02A		4213	393			1,310*									Building Joint - Post Office, Prospect Ave., W. 6th. St., W. 3rd. St. & Huron Rd.	Building Expansion Joint Work
13-100-WA	Public Square Community Urban Redevelopment Corp.	101-23-11B & 101-23-06B		14618	33			259*									Building Joint - Parking Garage - Prospect Ave. & Stouffers Access Drive	Building & Drive Expansion Joint Work
14-100-WA	The Higbee Co.	101-23-03B		6827	1			333*									Building Joint - Prospect Ave. Shoe Stock Room	Building Expansion Joint Work
14-72.5-WA	The Higbee Co.	101-23-04B		6827	1			17,532									Higbee Budget & Shoe Store, Shoe Stock Room, Transformers, Locker Room & Toilet Facilities	Possible Limits of Bridge Deck Repairs Above Concrete Ceiling** & Plaster Ceiling & Exposed Underside of Bridge Deck
15-100-WA	Banker's Trust Company	101-24-02C & 101-24-03B		12590	909			734*									Building Joint - Republic Bldg. , Guild Hall & Midland Bldg.	Building Expansion Joint Work
15A-100-WA	Banker's Trust Company	101-24-01B		5642	173			1,483									Sidewalk	Sidewalk Concrete & Structural Steel Repair
16-52-WA	The Cleveland Union Terminals Co.			15260	33			88,788									GCRTA Tracks & (OBA) Delivery Drive	Access to repair & paint the Structures
	The City of Cleveland (GCRTA) (Lessee)	101-23-13		299	151			37,773									Below Prospect - GCRTA Tracks	Area to be used for Access to Repair & Paint the Structures.
	The City of Shaker Heights (GCRTA) (Lessee)	101-25-03		299	171			6,650									Below W. 6th. St. GCRTA Tracks	
		101-25-05						17,900									Below Huron - GCRTA Tracks	
		101-25-04						8,500									Below (OBA) Bldg. - Access Drive	Use as Access Drive to West End of Project
	The Ohio Building Authority (Lessee)																Delivery Driveway	Use as Access Drive to West End of Project
	The Cleveland Union Terminals Co. (Owner)	101-20-06		15211	79	17,965		17,965									Drain Pipe near GCRTA Tracks	Drain Pipe Repair
16A-52-WA	The Cleveland Union Terminals Co.	101-23-13		15260	33			1,600										
	The City of Cleveland (GCRTA) (Lessee)																Drain Pipe from Bridge Deck on Prospect Ave. near Active GCRTA Tracks	Drain Pipe Repair
	The Cleveland Union Terminals Co. (Owner)	101-23-13		299	171			1,600										
17-100-WA	Terminal Investments Inc.	101-23-05B		15852	569			310*									Building Joint - Tower Bldg. - Prospect Ave.	Building Expansion Joint Work

* Indicates Linear Ft.
** Permission for Contractor to enter the Access Holes in Ceiling.

SCALE
MADE LJD DATE
TRCD. JSC DATE
CKD. JSC DATE

EUTHENICS INC.
CONSULTING ENGINEERS
CLEVELAND OHIO

NAME	REVISION	DATE

SUMMARY OF ADDITIONAL R/W REQUIRED

FHWA REGION	STATE	PROJECT	
5	OHIO	M-ID99(9)	

162/170

CUYAHOGA COUNTY
HURON/PROSPECT BRIDGE
R/W PLANS

R/W 8/16

CLEVELAND
ORIGINAL 2 ACRE LOTS

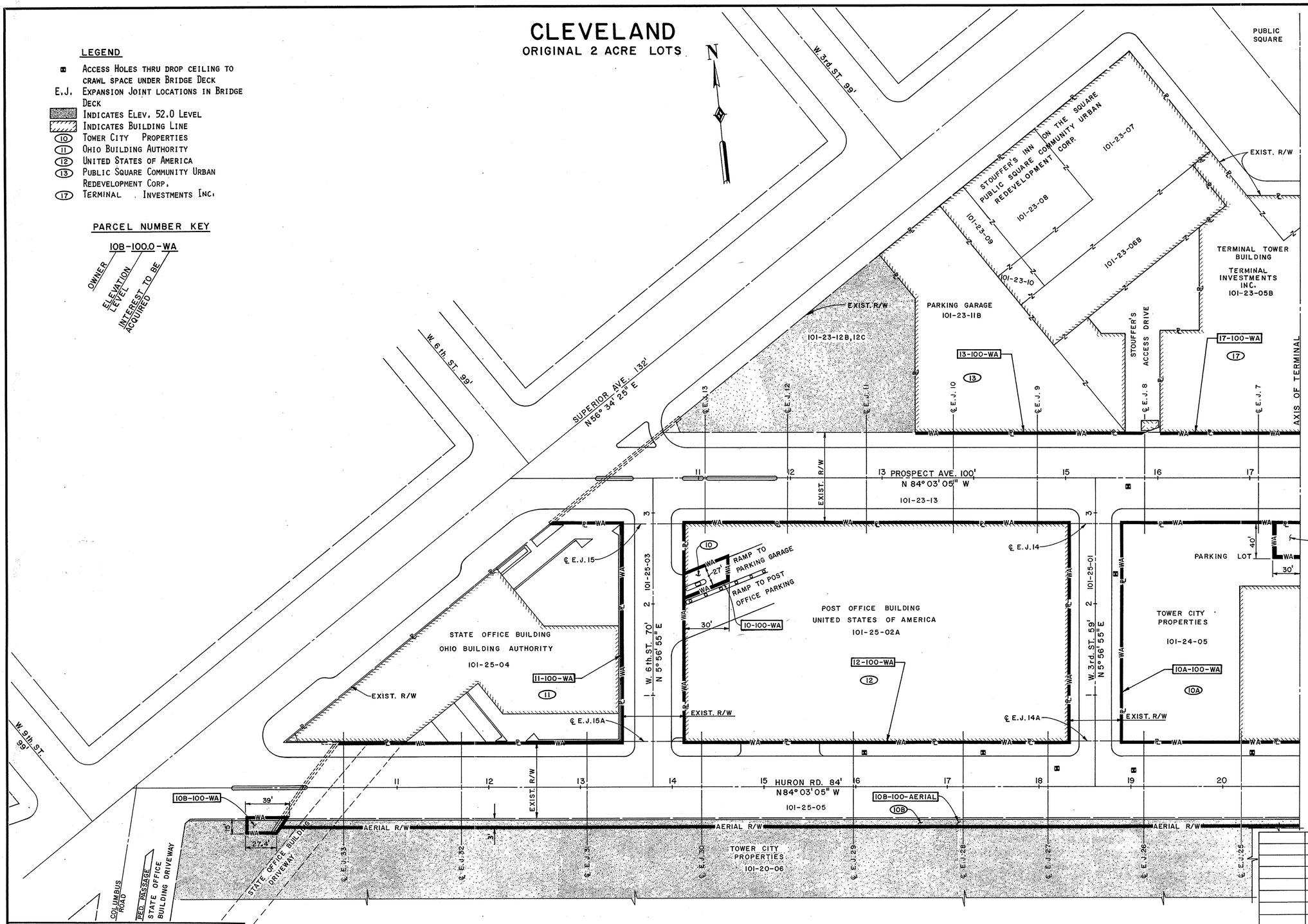

SCALE 1"=50'
MADE JJD DATE
TRCD. JSC DATE
CKD. JSC DATE

EUTHENICS INC.
CONSULTING ENGINEERS
CLEVELAND OHIO

NAME	REVISION	DATE

RIGHT OF WAY PLAN ELEVATION 100.0 STREET LEVEL

FHWA REGION	STATE	PROJECT	
5	OHIO	M-ID99(9)	

163/170

CUYAHOGA COUNTY
HURON/PROSPECT BRIDGE
R/W PLANS

R/W 9/16

CLEVELAND
ORIGINAL 2 ACRE LOTS

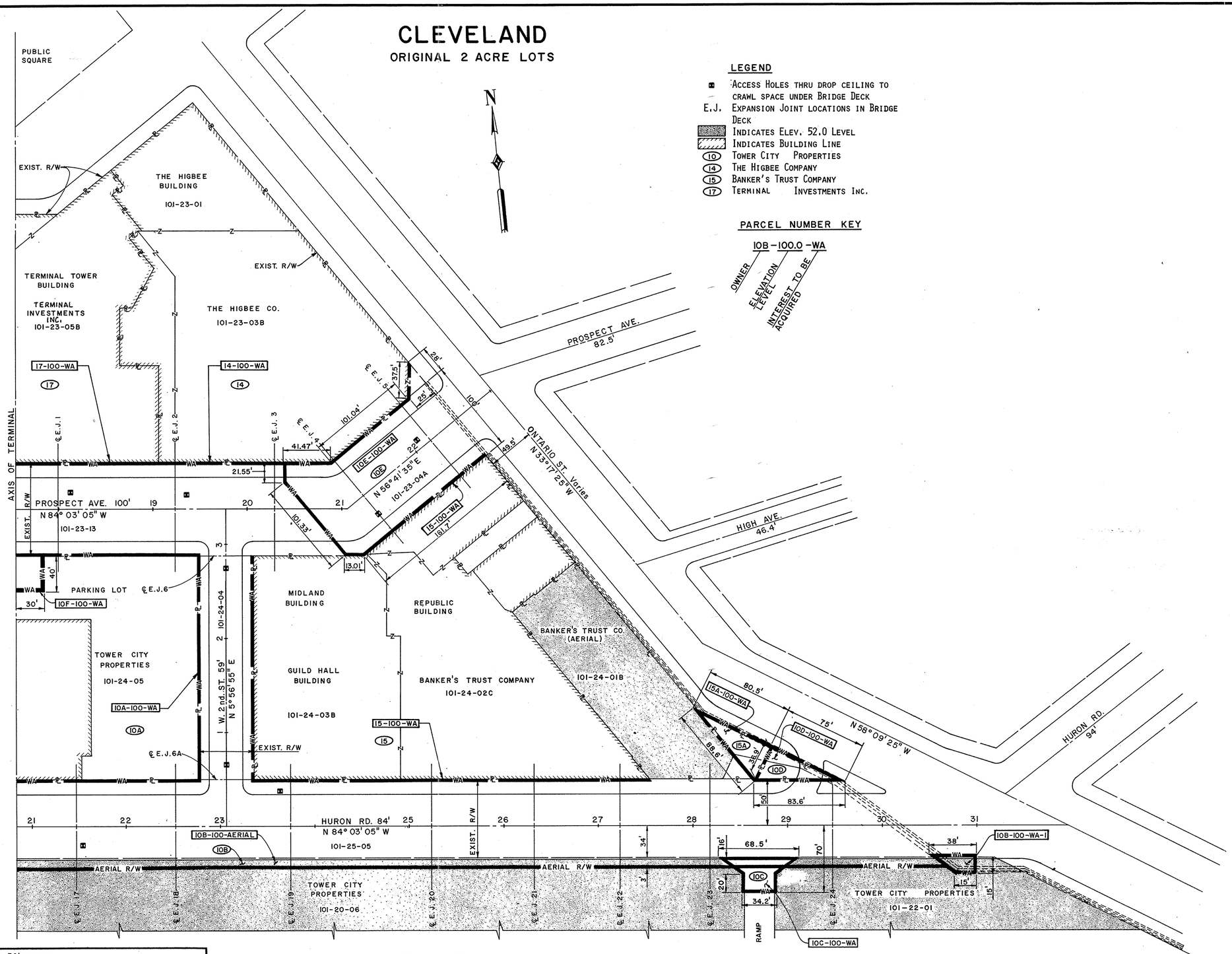

LEGEND

- ▪ ACCESS HOLES THRU DROP CEILING TO CRAWL SPACE UNDER BRIDGE DECK
- E.J. EXPANSION JOINT LOCATIONS IN BRIDGE DECK
- INDICATES ELEV. 52.0 LEVEL
- INDICATES BUILDING LINE
- (10) TOWER CITY PROPERTIES
- (14) THE HIGBEE COMPANY
- (15) BANKER'S TRUST COMPANY
- (17) TERMINAL INVESTMENTS INC.

PARCEL NUMBER KEY

10B-100.0-WA

OWNER — ELEVATION LEVEL — INTEREST TO BE ACQUIRED

SCALE 1"=50'
MADE LJD DATE
TRCD. JSC DATE
CKD. JSC DATE

EUTHENICS INC.
CONSULTING ENGINEERS
CLEVELAND OHIO

NAME	REVISION	DATE

RIGHT OF WAY PLAN ELEVATION 100.0 STREET LEVEL

FHWA REGION	STATE	PROJECT	
5	OHIO	M-ID99(9)	

164/170

CUYAHOGA COUNTY
HURON/PROSPECT BRIDGE
R/W PLANS

R/W 10/16

CLEVELAND
ORIGINAL 2 ACRE LOTS

LEGEND

- ■ ACCESS HOLES THRU DROP CEILING TO CRAWL SPACE UNDER BRIDGE DECK
- E.J. EXPANSION JOINT LOCATIONS IN BRIDGE DECK
- INDICATES ELEV. 52.0 LEVEL
- (10) TOWER CITY PROPERTIES

PARCEL NUMBER KEY

10B-85.0-WA-(L-I)

OWNER — ELEVATION LEVEL — INTEREST TO BE ACQUIRED — LESSEE

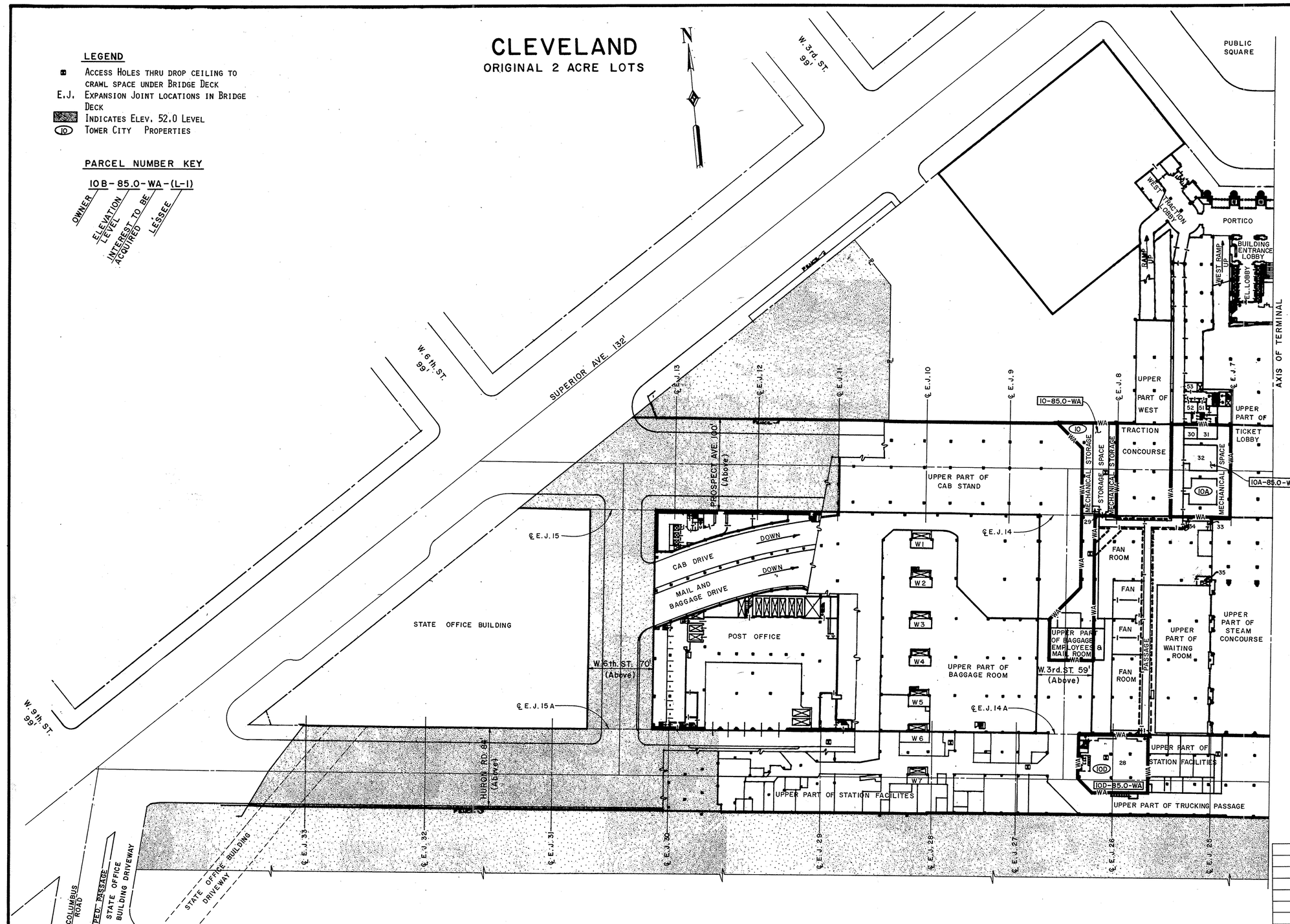

SCALE 1"=50'
MADE LJD DATE
TRCD. JSC DATE
CKD. JSC DATE

EUTHENICS INC.
CONSULTING ENGINEERS
CLEVELAND OHIO

NAME	REVISION	DATE

RIGHT OF WAY PLAN ELEVATION 85.0

FHWA REGION	STATE	PROJECT	
5	OHIO	M-ID99(9)	

165 / 170

CUYAHOGA COUNTY
HURON/PROSPECT BRIDGE
R/W PLANS

R/W 11 / 16

CLEVELAND
ORIGINAL 2 ACRE LOTS

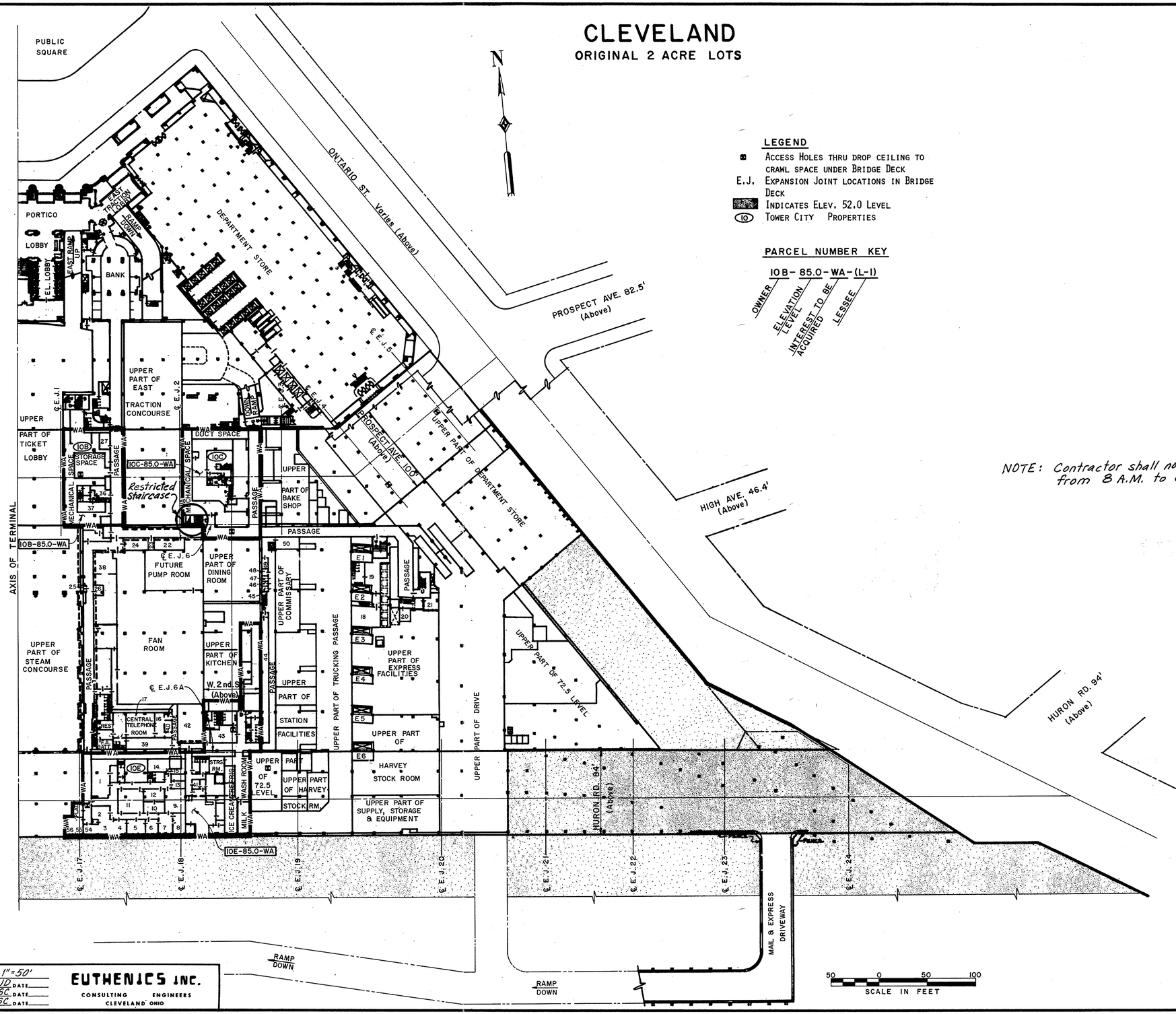

LEGEND

- ■ ACCESS HOLES THRU DROP CEILING TO CRAWL SPACE UNDER BRIDGE DECK
- E.J. EXPANSION JOINT LOCATIONS IN BRIDGE DECK
- INDICATES ELEV. 52.0 LEVEL
- (10) TOWER CITY PROPERTIES

PARCEL NUMBER KEY

10B- 85.0- WA-(L-1)

OWNER / ELEVATION LEVEL / INTEREST TO BE ACQUIRED / LESSEE

NOTE: Contractor shall not use restricted staircase (circled) from 8 A.M. to 6 P.M.

SCALE 1"=50'
MADE LJD DATE
TRCD. JSC DATE
CKD. JSC DATE

EUTHENICS INC.
CONSULTING ENGINEERS
CLEVELAND OHIO

NAME	REVISION	DATE

RIGHT OF WAY PLAN ELEVATION 85.0

FHWA REGION	STATE	PROJECT	
5	OHIO	M-1D99(9)	

166/170

CUYAHOGA COUNTY
HURON/PROSPECT BRIDGE
R/W PLANS

R/W 12/16

CLEVELAND
ORIGINAL 2 ACRE LOTS

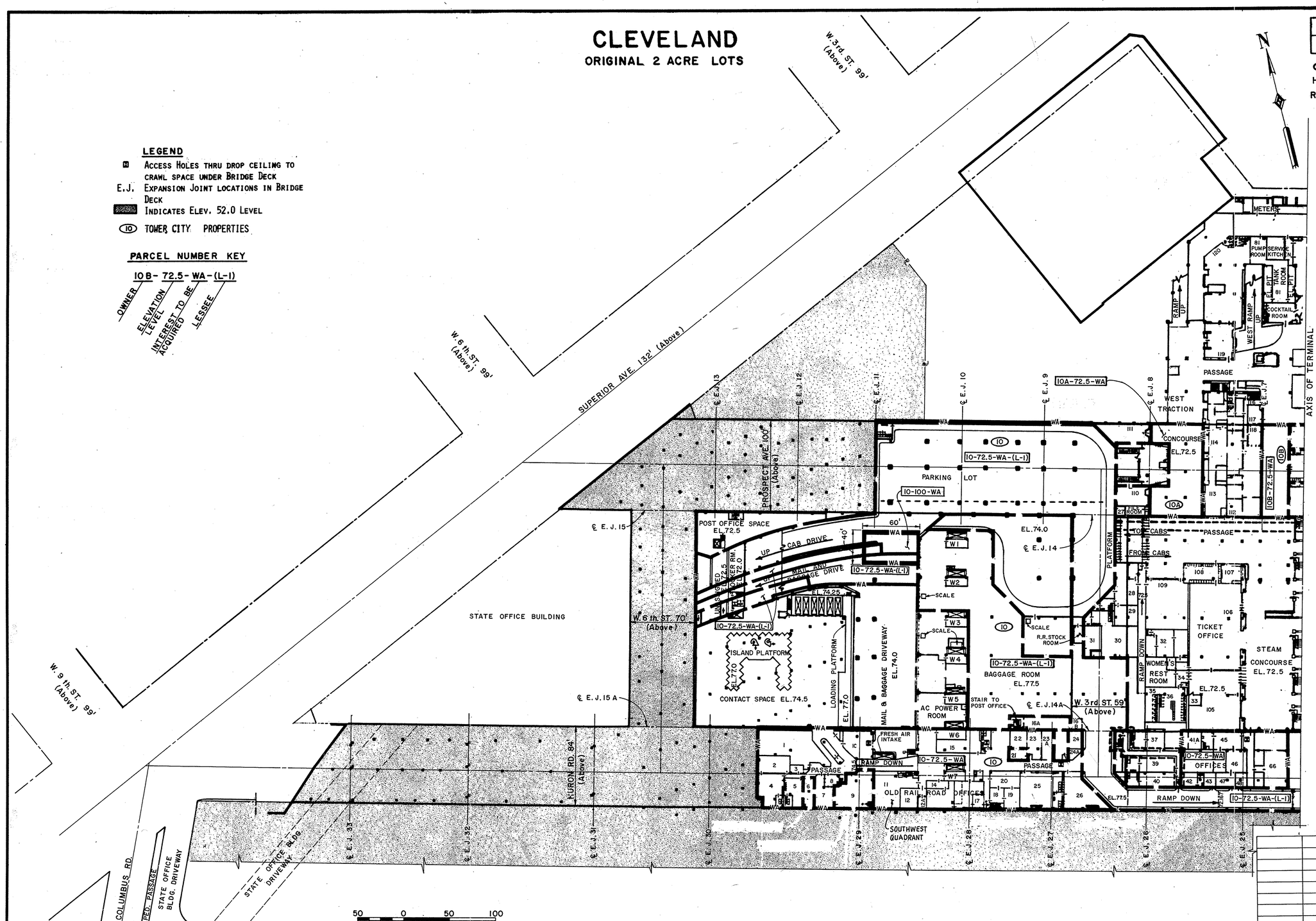

See note on R/W sheet 13/16

SCALE 1"=50'
MADE JJD DATE
TRCD. JSC DATE
CKD. JSC DATE

EUTHENICS INC.
CONSULTING ENGINEERS
CLEVELAND OHIO

NAME	REVISION	DATE

RIGHT OF WAY PLAN ELEVATION 72.5

FHWA REGION	STATE	PROJECT	
5	OHIO	M-ID99(9)	

167/170

CUYAHOGA COUNTY
HURON/PROSPECT BRIDGE
R/W PLANS

R/W 13/16

CLEVELAND
ORIGINAL 2 ACRE LOTS

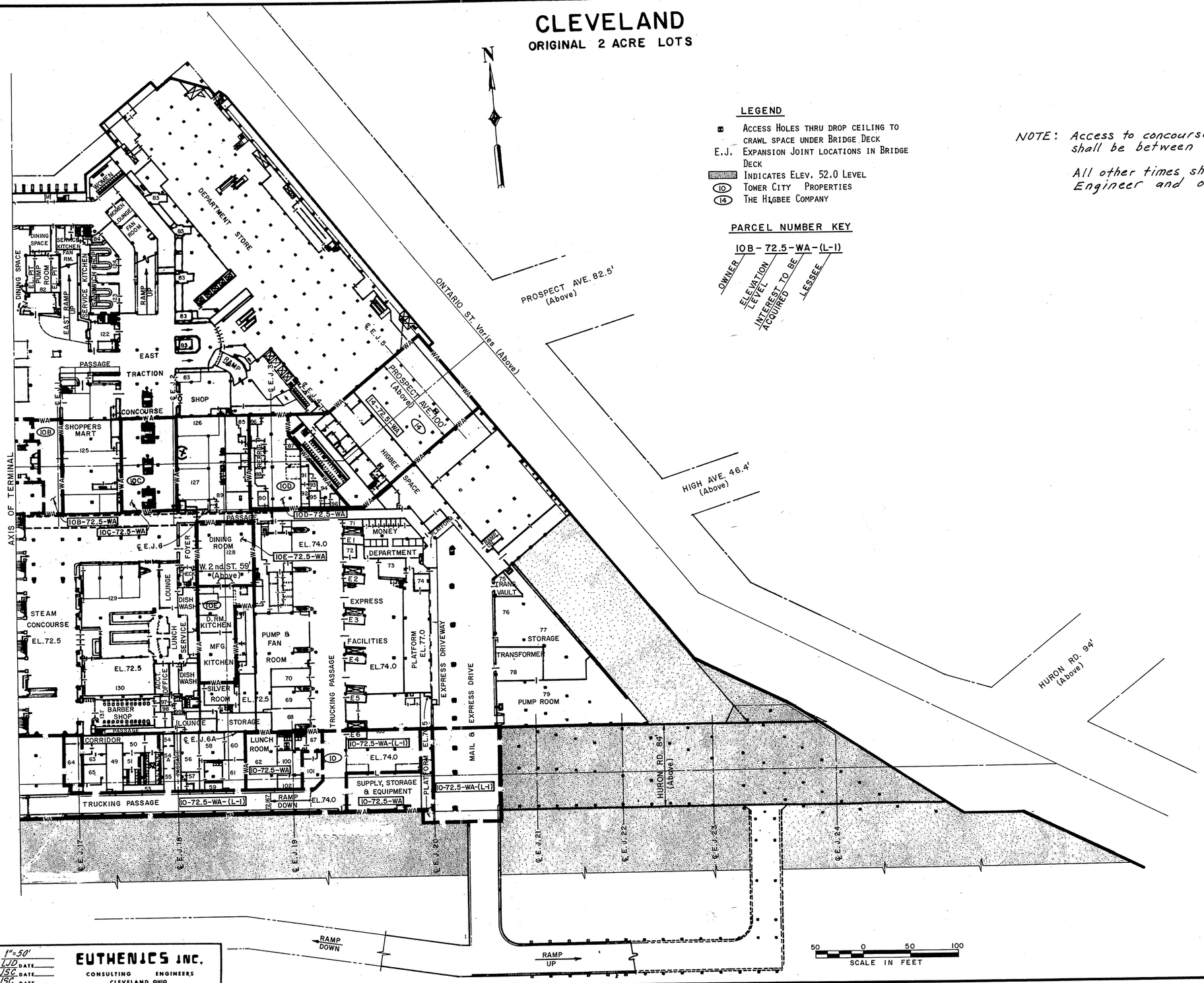

LEGEND

- ■ ACCESS HOLES THRU DROP CEILING TO CRAWL SPACE UNDER BRIDGE DECK
- E.J. EXPANSION JOINT LOCATIONS IN BRIDGE DECK
- INDICATES ELEV. 52.0 LEVEL
- (10) TOWER CITY PROPERTIES
- (14) THE HIGBEE COMPANY

PARCEL NUMBER KEY

10B - 72.5 - WA - (L-1)

OWNER / ELEVATION LEVEL / INTEREST TO BE ACQUIRED / LESSEE

NOTE: Access to concourse area and area 10D under Prospect Ave. shall be between 7 A.M. to 11 A.M. and 2 P.M. to 8 P.M. only.

All other times shall be arranged by Contractor with Engineer and owner.

NAME	REVISION	DATE

SCALE 1"=50'
MADE LJD DATE
TRCD. JSC DATE
CKD. JSC DATE

EUTHENICS INC.
CONSULTING ENGINEERS
CLEVELAND OHIO

RIGHT OF WAY PLAN ELEVATION 72.5

FHWA REGION	STATE	PROJECT	
5	OHIO	M-ID99(9)	

168/170

CUYAHOGA COUNTY
HURON/PROSPECT BRIDGE
R/W PLANS

R/W 14/16

CLEVELAND
ORIGINAL 2 ACRE LOTS

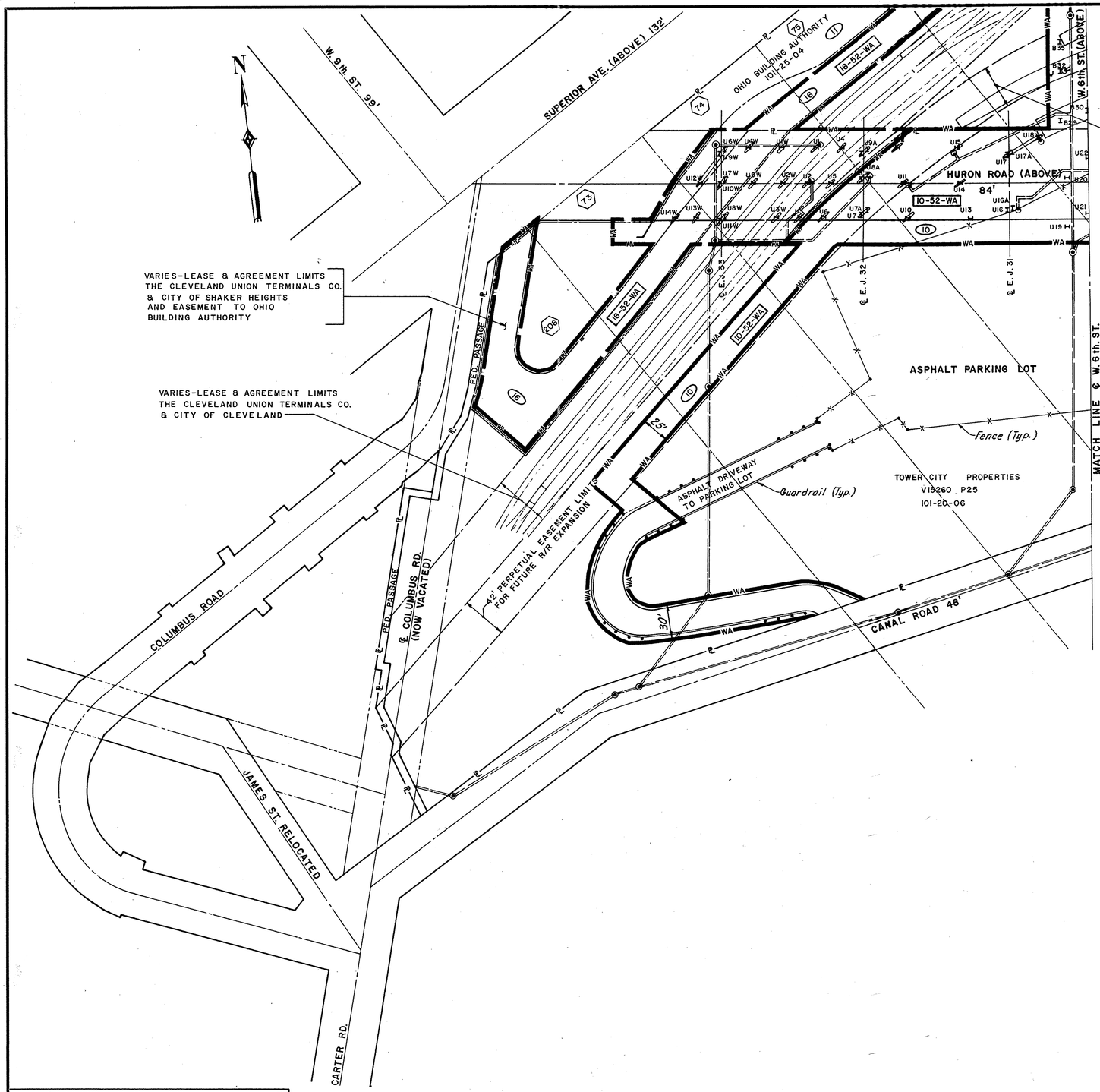

LEGEND

E.J. EXPANSION JOINT LOCATIONS IN BRIDGE DECK
(00) INDICATES ORIGINAL LOTS
(10) TOWER CITY PROPERTIES
(11) OHIO BUILDING AUTHORITY
(16) THE CLEVELAND UNION TERMINALS CO.

PARCEL NUMBER KEY

10B - 52.0 - WA - (L-1)

OWNER — ELEVATION TRACK LEVEL — INTEREST TO BE ACQUIRED — LESSEE

SCALE 1" = 50'
MADE. LJD DATE
TRCD. JSC DATE
CKD. JSC DATE

EUTHENICS INC.
CONSULTING ENGINEERS
CLEVELAND OHIO

50 0 50 100
SCALE IN FEET

NAME	REVISION	DATE

RIGHT OF WAY PLAN ELEVATION 52.0 TRACK LEVEL

FHWA REGION	STATE	PROJECT	
5	OHIO	M-ID99 (9)	

169/170

R/W 15/16

CUYAHOGA COUNTY
HURON/PROSPECT BRIDGE
R/W PLANS

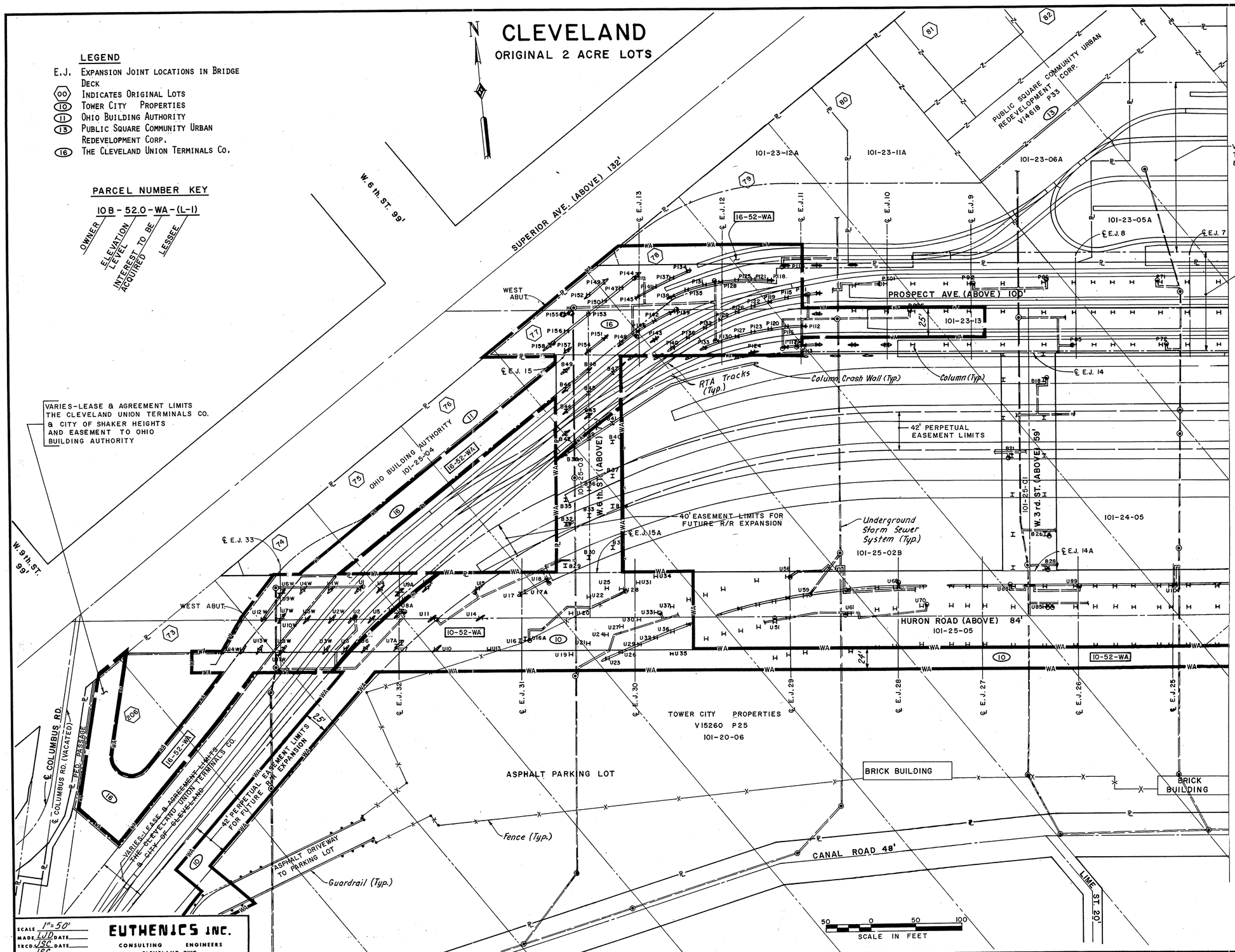

NAME	REVISION	DATE

RIGHT OF WAY PLAN ELEVATION 52.0 TRACK LEVEL

FHWA REGION	STATE	PROJECT	
5	OHIO	M-ID99(9)	

169A / 170

CUYAHOGA COUNTY
HURON/PROSPECT BRIDGE
R/W PLANS

R/W 16/16

CLEVELAND
ORIGINAL 2 ACRE LOTS

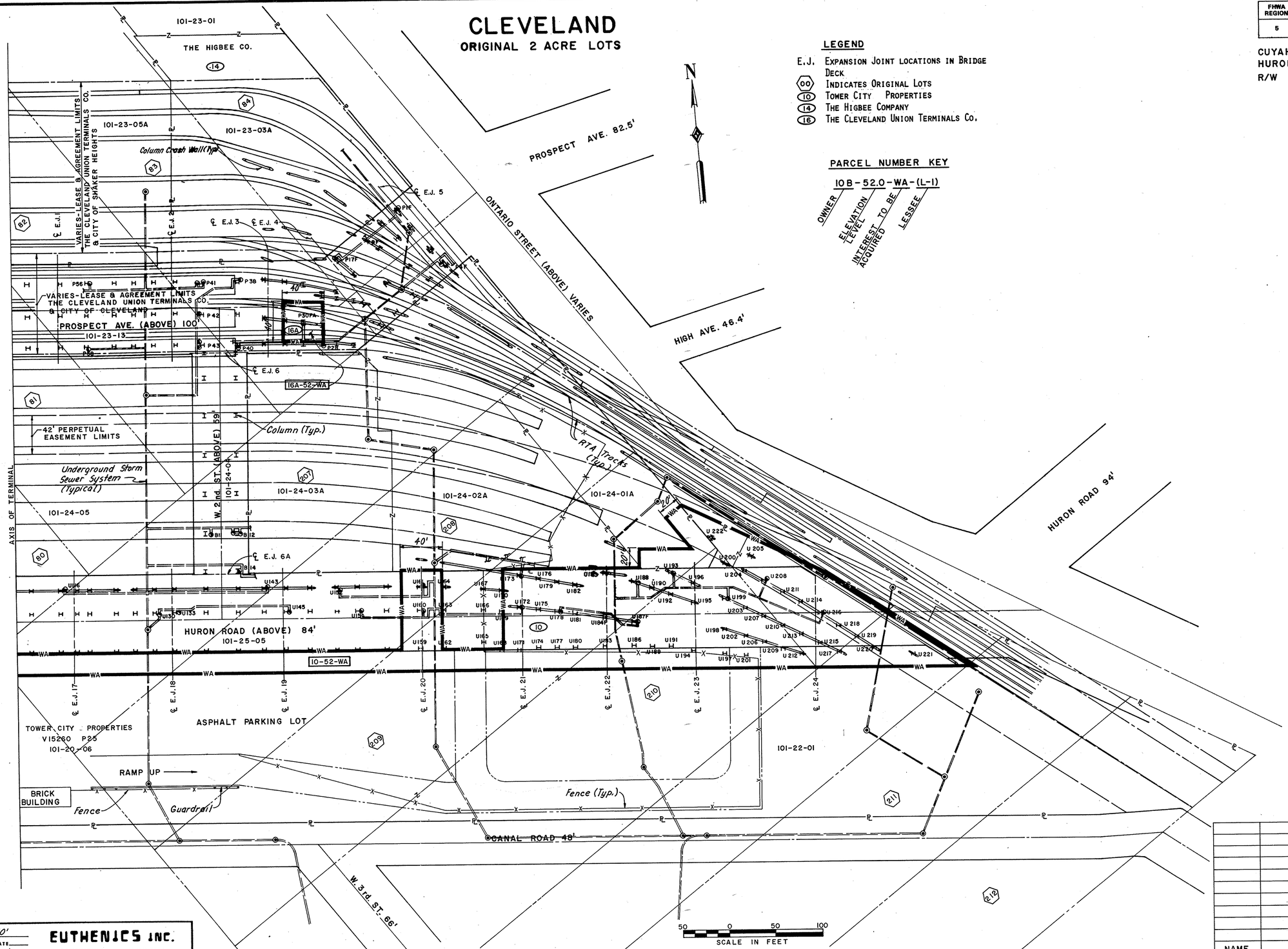

LEGEND

E.J. Expansion Joint locations in Bridge Deck
(00) Indicates Original Lots
(10) Tower City Properties
(14) The Higbee Company
(16) The Cleveland Union Terminals Co.

PARCEL NUMBER KEY

10B-52.0-WA-(L-1)

OWNER — ELEVATION LEVEL — INTEREST TO BE ACQUIRED — LESSEE

SCALE 1"=50'
MADE JJD DATE
TRCD. JSC DATE
CKD. JSC DATE

EUTHENICS INC.
CONSULTING ENGINEERS
CLEVELAND OHIO

NAME	REVISION	DATE

RIGHT OF WAY PLAN ELEVATION 52.0 TRACK LEVEL

169B
170

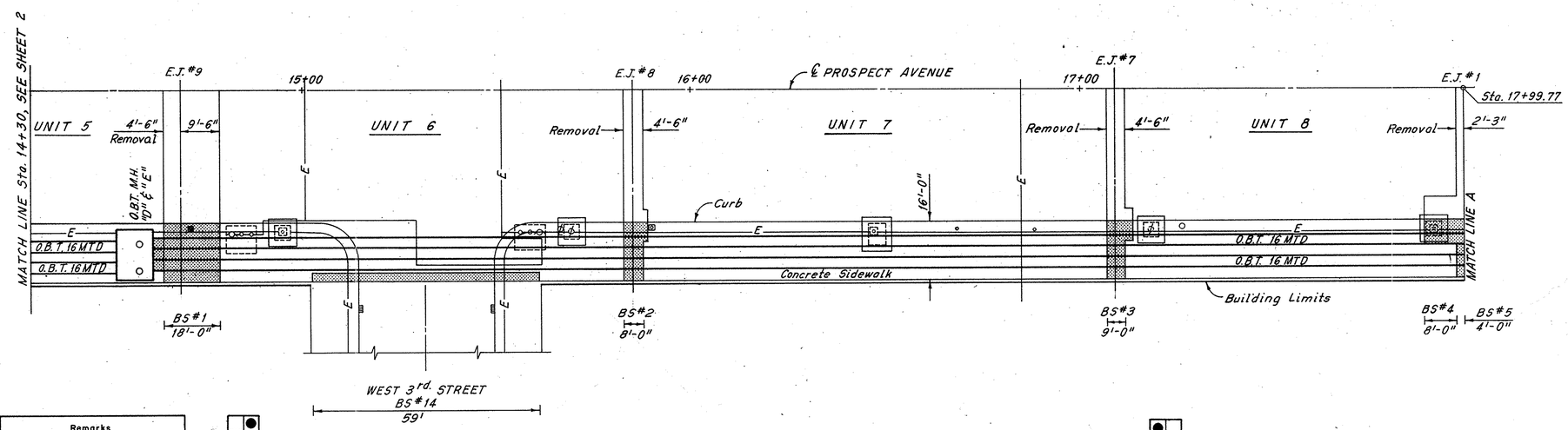

PLAN

Bid Sect.	Tr. Ft.	Structure	Remarks
1	18'	32 MTD	See M.H. Detail
2	8'	32 MTD	
3	9'	32 MTD	
4	8'	16 MTD	
5	4'	32 MTD	
6	3'	32 MTD	
7	63'	16 MTD	
8	9'	16 MTD	
9	6'	32 MTD	
10	9'	32 MTD	See M.H. Detail
11	6'	32 MTD	
12	6'	32 MTD	
13	3'	16 MTD	
14	59'	16 MTD	See W. 3rd. St. Detail
15	55'	16 MTD	See W. 2nd. St. Detail
Total	266		

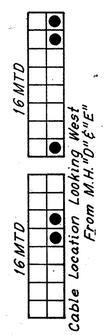

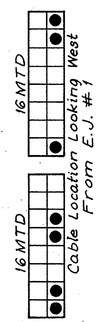

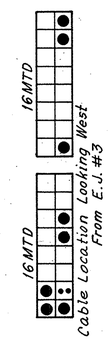

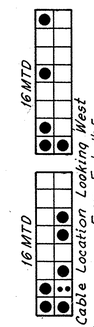

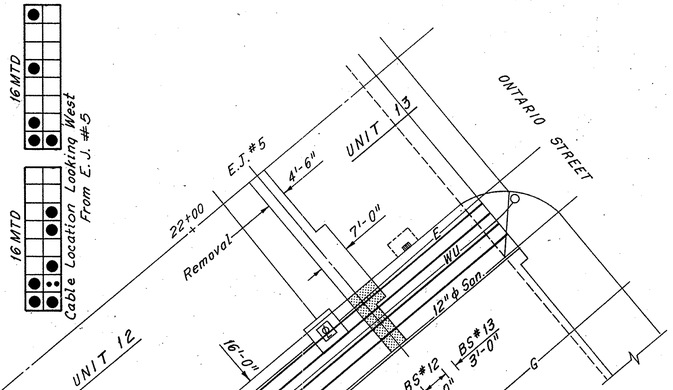

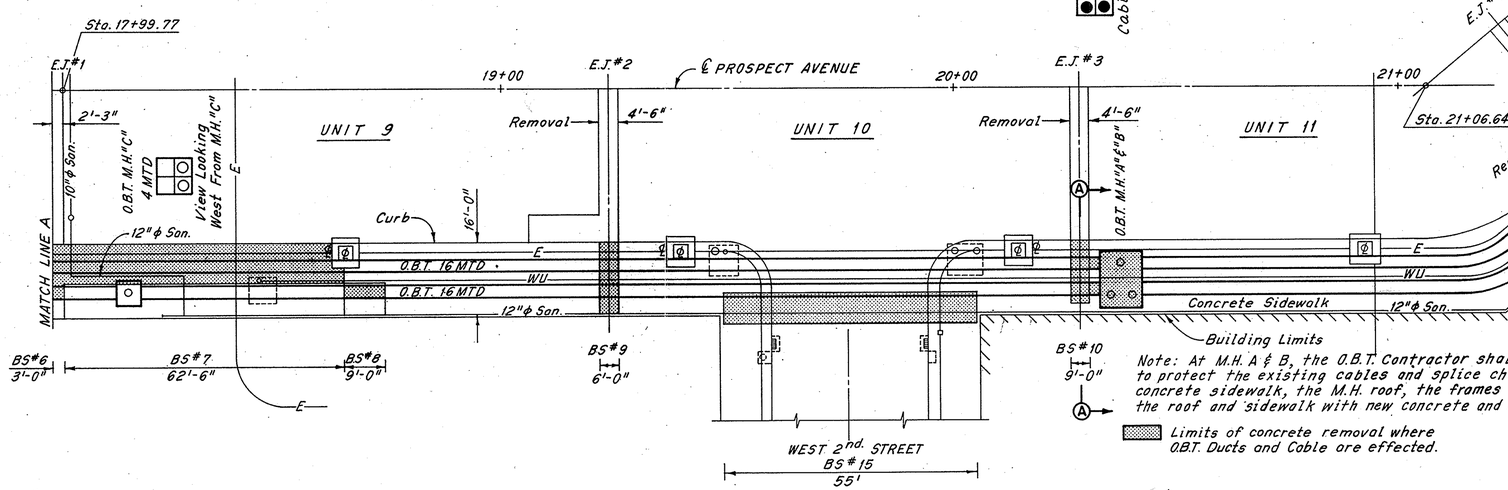

Note: At M.H. A & B, the O.B.T. Contractor shall build a false roof to protect the existing cables and splice chambers, remove the concrete sidewalk, the M.H. roof, the frames and covers and replace the roof and sidewalk with new concrete and replace the frames and covers.

Limits of concrete removal where O.B.T. Ducts and Cable are effected.

Notes:
See Conduit SHT. Main #89
See Sheets 3 and 4 for Details.
For Section A-A See Sheet 3.

PLAN

ACCT'G CLASS

SCALE
Horizontal:
Vertical:

BEFORE YOU DIG CALL TOLL FREE 800-362-2764

IN EFFECT

ORDER NO.	P	F

THE OHIO BELL TELEPHONE CO.

DISTRICT MAIN
PROJ. NO. 12996 ORDER NO.
COUNTY CUYAHOGA ACCOUNT AREA 23100
PREPARED BY HNTB TELEPHONE NO. 8713
DATE 3-22-82 TOTAL SHEETS SHEET NO. 1
EXCHANGE MAIN CENTRAL OFFICE
ROUTE PLATE NO.

M.H. K & L Note: The O.B.T. Contractor shall remove all concrete sidewalk over M.H. K and L. The sidewalk is the roof of the manhole. Prior to removal of this concrete the Contractor shall provide a temporary timber roof, or other means approved by the O.B.T. Engineer of protecting the cable and other equipment in the manhole. The Contractor shall remove, store and replace the frames and covers.

Limits of concrete removal where O.B.T. Ducts and cable are affected.

M.H. F Note: As part of this project M.H. F will be abandoned. The O.B.T. Contractor shall remove the complete M.H. F and realign the new conduit accordingly.

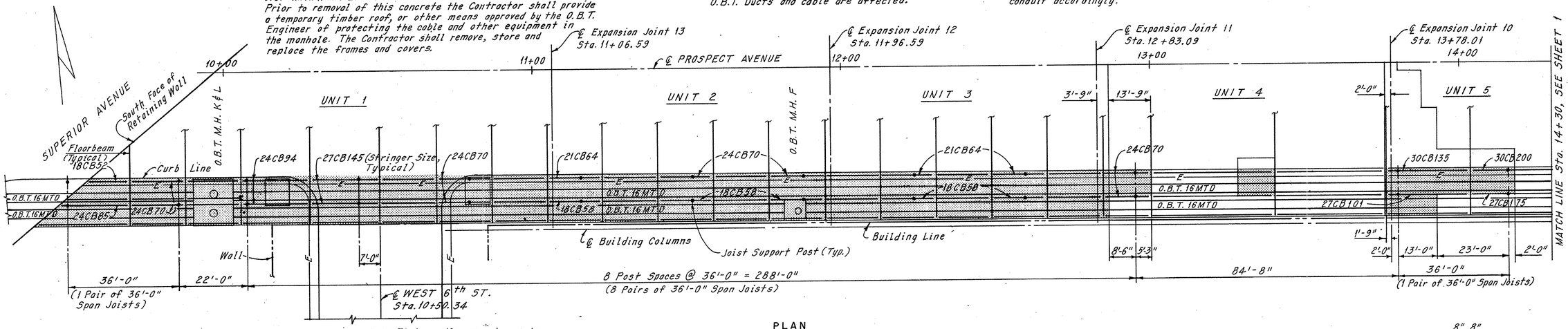

Note "A": Timber cable supports may be tied down with rope, wire or other approved means.

PLAN

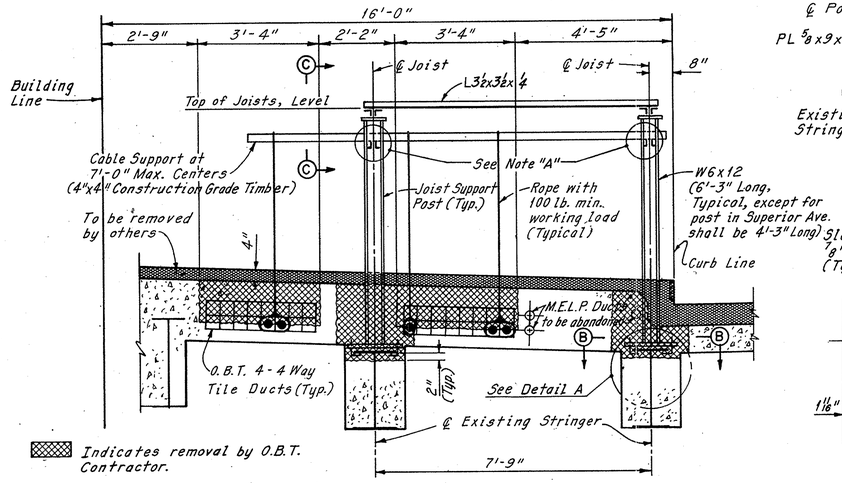

TYPICAL SECTION
(Looking West)

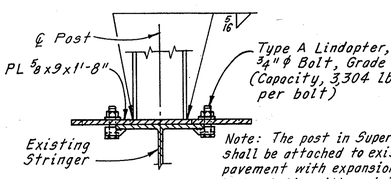

Note: The post in Superior Ave. shall be attached to existing pavement with expansion type anchor bolts with a minimum pull out capacity of lbs./bolt.

DETAIL A

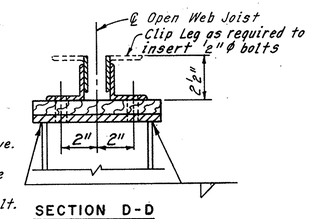

SECTION D-D

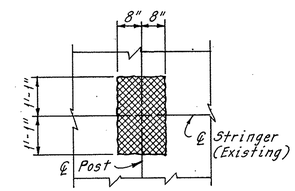

REMOVAL PLAN AT JOIST SUPPORT POSTS
(By O.B.T. Contractor)

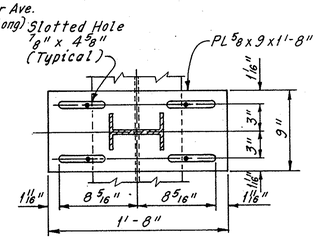

SECTION B-B
(Bottom Plate)

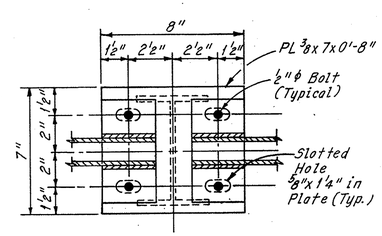

SECTION E-E
(Top Plate)

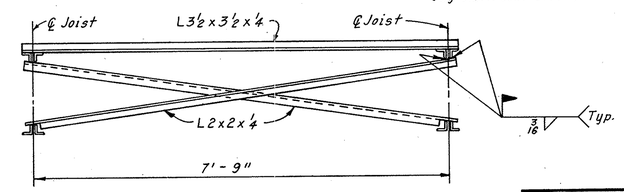

SECTION F-F
BRIDGING DETAIL
(4 Required each span, uniformally spaced)

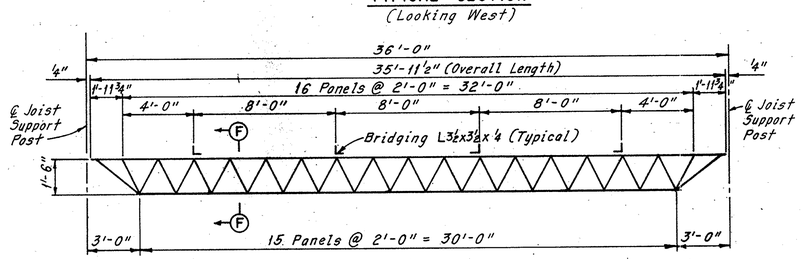

TYPICAL 18J5 OPEN WEB STEEL 36'-0" SPAN JOIST ELEVATION

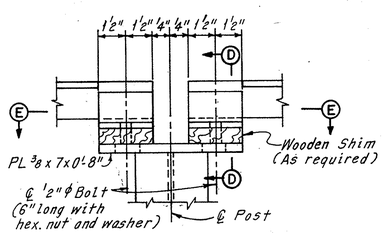

ELEVATION C-C

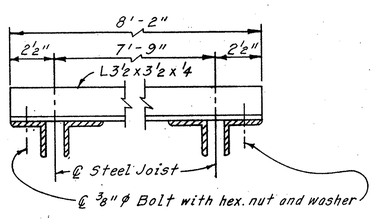

BRIDGING DETAIL

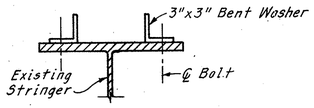

CLIP ANGLE DETAIL

Note:
Contractor shall remove and replace bent washers as required to attach joist support posts.

ACCT'G CLASS	
SCALE	
Horizontal:	
Vertical:	

BEFORE YOU DIG CALL TOLL FREE 800-362-2764

IN EFFECT		
ORDER NO.	P	F

THE OHIO BELL TELEPHONE CO.

DISTRICT MAIN
PROJ. NO. 12996 ORDER NO.
COUNTY CUYAHOGA ACCOUNT AREA 23100
PREPARED BY H.N.T.B. TELEPHONE NO. 8713
DATE 6-22-82 TOTAL SHEETS SHEET NO. 2
EXCHANGE MAIN CENTRAL OFFICE
ROUTE PLATE NO.

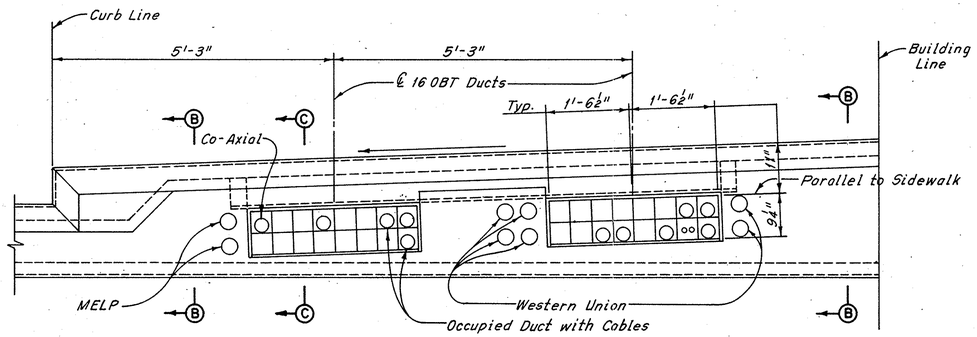

SECTION A-A

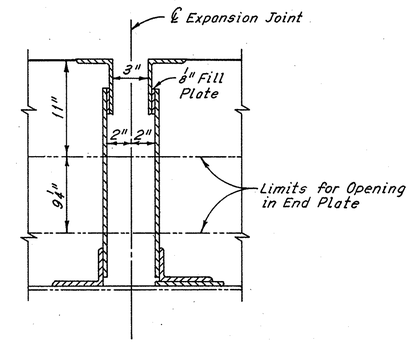

SECTION B-B

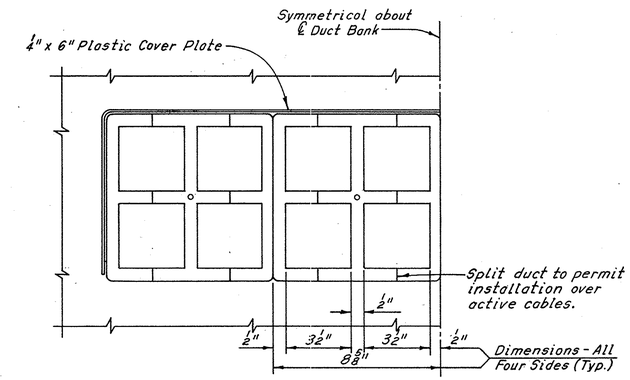

SECTION D-D

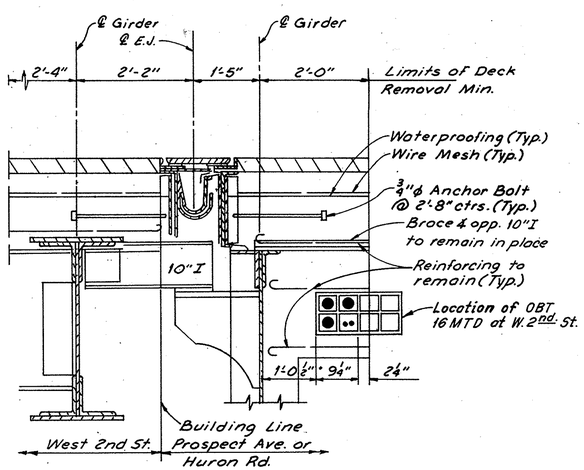

TYPICAL EXPANSION JOINT
(W. 2nd St. at Prospect Ave)

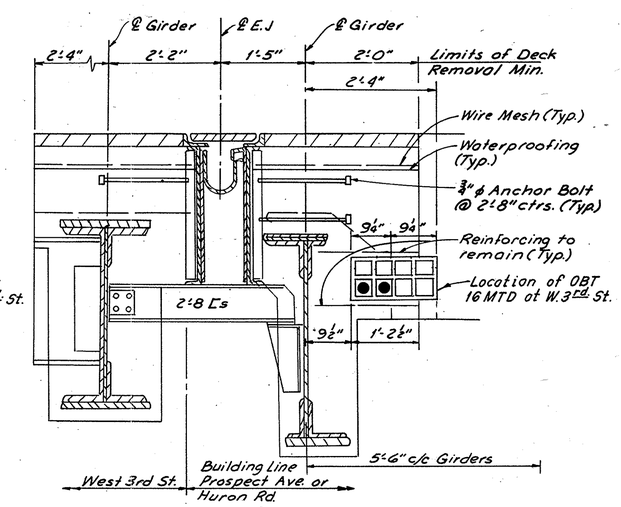

TYPICAL EXPANSION JOINT
(W. 3rd St. at Prospect Ave)

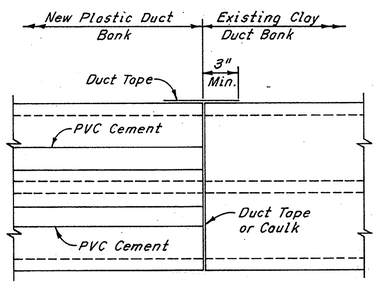

SPLICE DETAIL WHERE NEW SPLIT PLASTIC DUCT MEETS EXISTING CLAY TILE DUCT

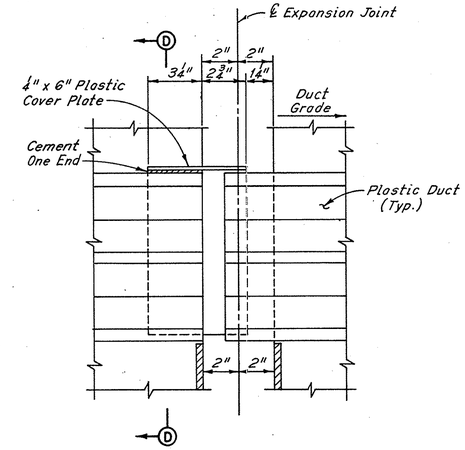

SECTION C-C

Dimensions are given for a temperature of 60° F.

Note:
For location of Section A-A see Sheet 1.

ACCT'G CLASS		
SCALE Horizontal: Vertical: No Scale		
BEFORE YOU DIG CALL TOLL FREE 800-362-2764		
IN EFFECT		
ORDER NO.	P	F

THE OHIO BELL TELEPHONE CO.	
DISTRICT MAIN	
PROJ. NO. 12996	ORDER NO.
COUNTY CUYAHOGA	ACCOUNT AREA 23100
PREPARED BY HNTB	TELEPHONE NO. 8713
DATE 3-22-82 TOTAL SHEETS	SHEET NO. 3
EXCHANGE MAIN	CENTRAL OFFICE
ROUTE	PLATE NO.

169E
170

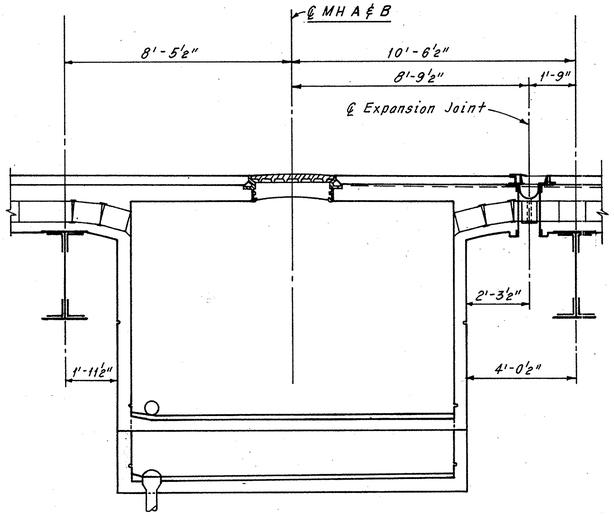

SECTION
Location – UNIT 12

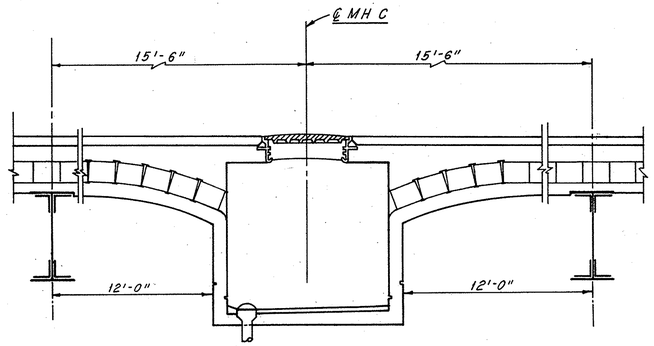

SECTION
Location – UNIT 9

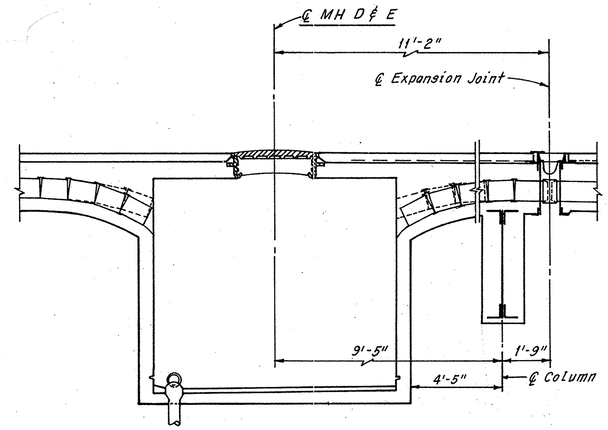

SECTION
Location – UNIT 5

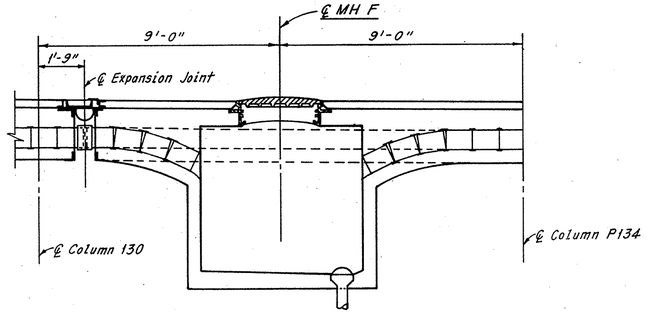

SECTION
(To be Abandoned)
Location – UNIT 2

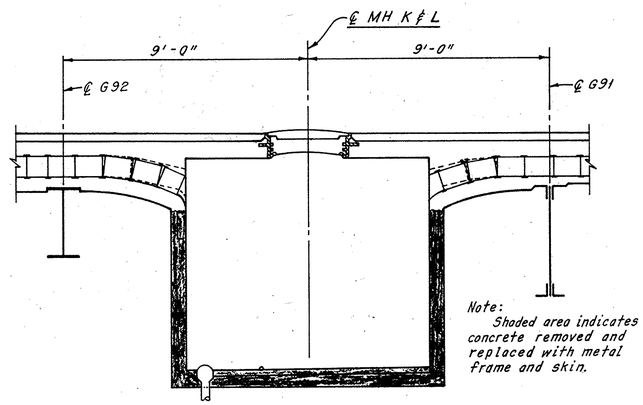

Note:
Shaded area indicates concrete removed and replaced with metal frame and skin.

SECTION
Location – UNIT 1

ACCT'G CLASS		
SCALE Horizontal: Vertical:		
BEFORE YOU DIG CALL TOLL FREE 800-362-2764		
IN EFFECT		
ORDER NO.	P	F

THE OHIO BELL TELEPHONE CO.

DISTRICT MAIN
PROJ. NO. 12996 ORDER NO.
COUNTY CUYAHOGA ACCOUNT AREA 23100
PREPARED BY H.N.T.B. TELEPHONE NO. 8713
DATE 5-21-82 TOTAL SHEETS SHEET NO. 4
EXCHANGE MAIN CENTRAL OFFICE
ROUTE PLATE NO.

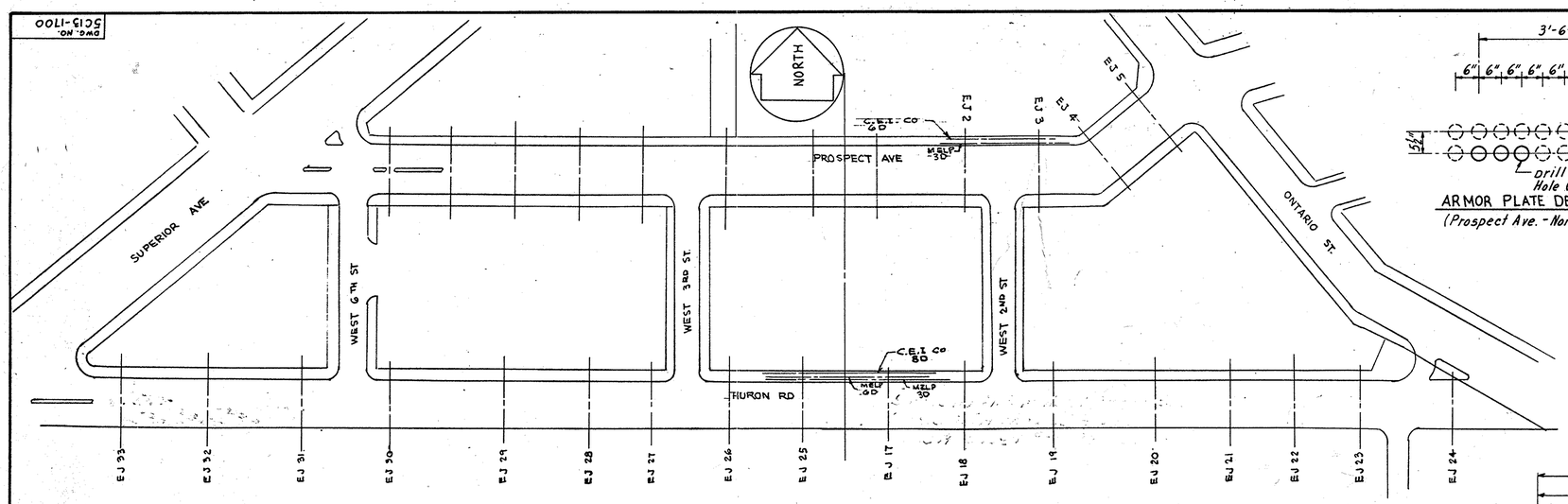

PLAN

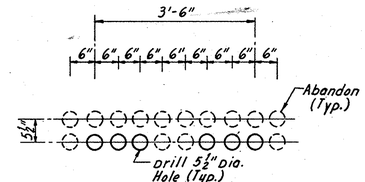

ARMOR PLATE DETAILS AT EXP. JT.
(Prospect Ave.-North Sidewalk)

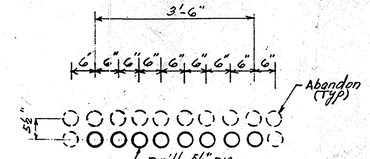

ARMOR PLATE DETAILS AT EXP. JT.
(Huron Road-North Sidewalk)

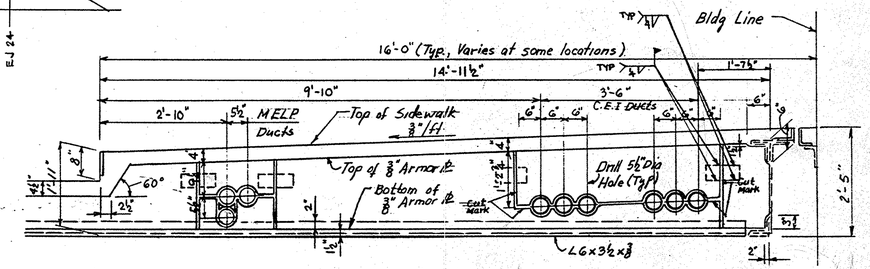

ARMOR PLATE DETAILS AT EXP. JT.
(Prospect Ave.-North Sidewalk)

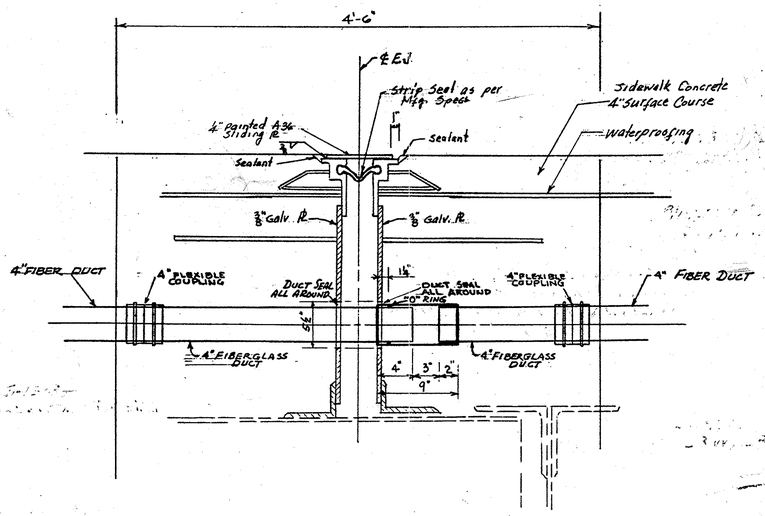

SIDEWALK EXPANSION JOINT (TYPICAL)
ARMOR DETAIL
NORTH SIDEWALK-PROSPECT AVE & HURON RD

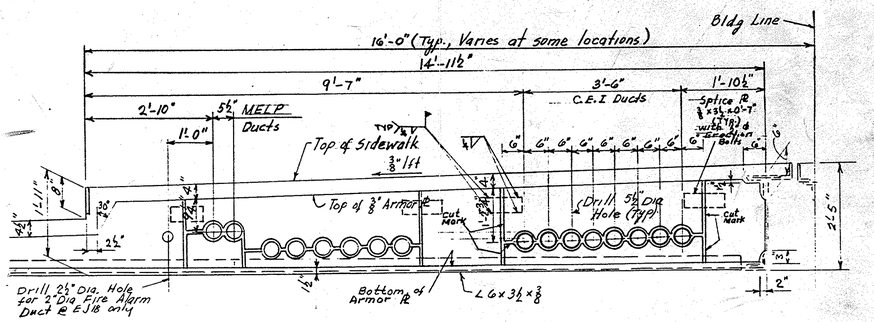

ARMOR PLATE DETAILS AT EXP. JT.
(Huron Road-North Sidewalk)

NOTE: THIS DWG. TO BE WORKED WITH 3E-6-420.

48 HOURS BEFORE YOU DIG
Call 800-362-2764 TOLL FREE
OHIO UTILITIES PROTECTION SERVICE

REFERENCES	CIVIL AND MECHANICAL ENGINEERING DEPT.	DATE	PLANT AND SUBSTATION ENGINEERING DEPT.	DATE	TRANSM'N AND DIST. ENGINEERING DEPT.	DATE
BUTHENICS INC SH. 52	MADE		MADE A. MAZUR	7/30/82	MADE	
	TRCD		TRCD		TRCD	
	CHKD		CHKD		CHKD J.A. MARTIN	7/7/82
	APPD		APPD		APPD	
	APPD		APPD		APPD E.T. SCHNIEDER	7/7/82
	APPD		APPD M.C. Le Capite	7/7/82	APPD	

TITLE: FIBERGLASS CONDUIT EXPANSION JOINT
NORTH SIDEWALK-PROSPECT AVE. & HURON RD.
REHABILITATION OF TOWER CITY BRIDGES
THE CLEVELAND ELECTRIC ILLUMINATING COMPANY
CLEVELAND OHIO

SCALES: USE DIMENSIONS ONLY

DWG. NO. 5C13-1700 REV.

MADE / CHKD / APPD / APPD / DATE

MICROFILMED BY PGW. REV. 1-81

IX-1D99(9)

FHWA REGION	STATE	PROJECT	
5	OHIO	IX-1D99(9)	

1 / 170

CUYAHOGA COUNTY
HURON/PROSPECT BRIDGE
PROJ. 870 (83)

Federal No. M-1D99(9) appearing throughout this plan shall be considered to read IX-1D99(9).

MICROFILMED
SEP 9 1991

STATE OF OHIO
DEPARTMENT OF TRANSPORTATION

CUYAHOGA COUNTY

CITY OF CLEVELAND

REHABILITATION OF THE TOWER CITY BRIDGES

PROSPECT AVE., HURON RD., WEST 2nd., 3rd. & 6th. ST. VIADUCTS

INDEX OF SHEETS

COVER SHEET	1
SCHEMATIC PLAN	2
SCHEMATIC ELEVATIONS	3
ALTERNATE ROUTE SIGNING PLAN & MAINTENANCE OF TRAFFIC NOTES	3A
MAINTENANCE OF TRAFFIC (CONSTRUCTION PHASING)	4 & 4A TO 9
GENERAL NOTES	10 TO 16, 16A, 16B, 16C, 16D & 16E
GENERAL SUMMARY	17 & 17A
SUB-SUMMARY	17B & 17C
SURFACE PLANS AND DETAILS - PROSPECT AVENUE	18 TO 25
SURFACE PLANS AND DETAILS - HURON ROAD	26 TO 37 & 35A
SURFACE PLANS AND DETAILS - WEST 6TH, 3RD & 2ND STREETS	38 TO 43
EXISTING EXPANSION JOINT DETAILS	44 & 45
PROPOSED EXPANSION JOINT DETAILS	46 TO 53 & 49A
MISCELLANEOUS CONCRETE DECK DETAILS	54
STREET LEVEL FRAMING & DRAINAGE - PROSPECT AVENUE	55 TO 57, 57A
STREET LEVEL FRAMING & DRAINAGE - HURON ROAD	58 TO 62, 58A, 58B, 58C, 58D
STREET LEVEL FRAMING & DRAINAGE - WEST 6TH, 3RD & 2ND STREETS	63 TO 65
FRAMING 72.5 LEVEL - PROSPECT AVENUE	66
FRAMING 72.5 LEVEL - HURON ROAD	67 & 68
STEEL REPAIR DETAILS	69 TO 89 & 71A
DRAINAGE DETAILS	90 TO 98
SUBDRAINAGE FOR WEARING COURSE DETAILS	99
TRACK LEVEL PLANS	100 & 101
ABUTMENT REPAIRS	102 TO 104
MISCELLANEOUS CONCRETE SUBSTRUCTURE REPAIRS	105
PARAPET & FENCE DETAILS	106 TO 112
MISCELLANEOUS DETAILS	113
M.E.L.P. UTILITY PLANS	114 TO 123
REINFORCEMENT SCHEDULES	124 TO 133
SIGNING & STRIPING NOTES, PLANS AND GENERAL SUMMARY	134 TO 138, 134A, 134B & 136A
SIDEWALK SURFACE PLANS AND DETAILS	139 TO 143
FIRE SAFETY PLAN & DETAILS	144, 145 & 145A TO 150
SECONDARY DRAINAGE SYSTEM	151 TO 154
RIGHT-OF-WAY PLANS	
CENTER LINE SURVEY PLAT	155
RIGHT-OF-WAY PROPERTY MAP	156 TO 158
SUMMARY OF ADDITIONAL R/W REQUIRED	159 TO 161
RIGHT-OF-WAY PLAN ELEVATION 100.0	162 & 163
RIGHT-OF-WAY PLAN ELEVATION 85.0	164 & 165
RIGHT-OF-WAY PLAN ELEVATION 72.5	166 & 167
RIGHT-OF-WAY PLAN ELEVATION 52.0	168 TO 169, 169A
O.B.T. UTILITY PLANS	169B TO 169E
C.E.I. UTILITY PLANS	170

DESIGN DESIGNATION

CURRENT ADT (1982)	= 9,870
DESIGN YEAR ADT (2002)	= 11,844
D.H.V.	= 1,184
D.	= 60%
T.	= 10%
V.	= 35 M.P.H.

Sheets 16, 16B, 17, 17B, 22, 31, 34, 38, 41, 42 & 54 revised 12-19-83
Sheets 57A, 58A, 58B & 58C, & 58D added 3-13-84
Sheets 47 & 74 revised 3-28-84 EBL
Sheets 58A & 58B revised 4-10-84 EBL
Sheet 58E added 5-3-84 EBL
Sheet 58E revised 5-10-84 EBL
Sheet 49 revised 5-10-84 EBL
Sheets 17, 17A, 17B & 17C revised 6-11-84 EBL
Sheets 35B, 35C, 45A, 45B, 45C added 6-11-84 EBL
Sheets 56A & 57B added 6-14-84 EBL

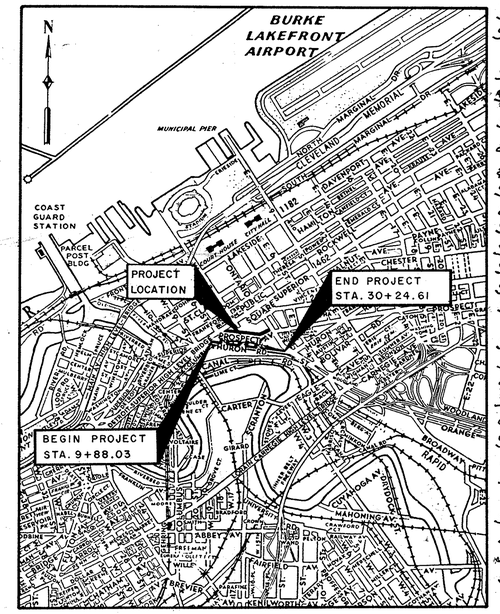

LOCATION MAP

2000 0 2000 4000 6000 8000
SCALE IN FEET

Sheets 117 & 118 revised 8-6-84 EBL
Sheets 25A thru 25G and 123A added 8-6-84 EBL
Sheet 48 revised 8-20-84 EBL
Sheet 56B added 9-13-84 EBL
Sheets 25U, 25K, 25L, 25M, 25N, 25P, 55A, 55B, 55C, 55D, 55F, & 55G, added 10-16-84 EBL
Sheets 19B, 19C, 19D, 19E, 19F, 25H, 55E, 66A added 1-11-85 EBL
Sheets 63 & 70 revised 1-11-85 EBL
Sheet 55H added 1-22-85 EBL
Sheets 18A & 55I added 1-31-85 EBL
Sheet 91S supersedes sheet 91, 1-31-85 EBL
Sheets 54A, 55J, 55K, 90A & 93A added 2-25-85 EBL
Sheets 55AS, 90S, 92S & 93S supersede sheets 55A, 90, 92 & 93 respectively 2-25-85 EBL
Sheets 18C, 18D, 19A, 19G, 19H, added 3-20-85 EBL
Sheets 18B, 18E, 18F, 18G, 60D, 60E, 60F, 60G added 5-9-85 EBL
Sheets 60A, 60B, 60H, 60J, added 5-17-85 EBL
Sheets 28B, 28C, 28D, 28E, 28F, 28G, 60C and 61C added 8-6-85
Sheets 94S and 95S supersede sheets 94 and 95 respectively 8-6-85 EBL
Sheets 28H, 28I, 28J, 28K, 28L, 28M, 61A, 61D added 8-29-85 EBL
Sheet 62C added 9-5-85 EBL
Sheets 28N, 28P, & 62D added 9-20-85 EBL
Sheets 28Q, 28R, 28S, 28T, 28U, 28V, 28W, 28X, 62A, 62E, 62F, 67A added 10-11-85 EBL
Sheets 28A, 62B, 68A, 68B, 68C, 97A, 97S added 1-3-85 EBL
Sheets 33S, 34S, 36S, 37S, 96S, 126S, 127S, supersede sheets 33, 34, 36, 37, 96, 126, & 127 respectively. 3-26-86 EBL
Sheets 36A, 37A, 61B, 96A, & 126A added 3-26-86 EBL

1983 SPECIFICATIONS

THE STANDARD SPECIFICATIONS OF THE STATE OF OHIO, DEPARTMENT OF TRANSPORTATION, INCLUDING CHANGES AND SUPPLEMENTAL SPECIFICATIONS LISTED IN THE PROPOSAL SHALL GOVERN THIS IMPROVEMENT.

I HEREBY APPROVE THESE PLANS AND DECLARE THAT THE MAKING OF THIS IMPROVEMENT WILL REQUIRE THE CLOSING TO TRAFFIC OF THE HIGHWAY AND THAT DETOURS WILL BE PROVIDED AS INDICATED ON THE PLANS

APPROVED — DATE 4/4/83
DIRECTOR OF PUBLIC SERVICE, CITY OF CLEVELAND

APPROVED — DATE 4/7/83
DISTRICT DEPUTY DIRECTOR OF TRANSPORTATION

APPROVED — DATE 5-25-83
ENGINEER, BUREAU OF BRIDGES AND STRUCTURAL DESIGN

APPROVED — DATE 8-15-83
CHIEF ENGINEER, PLANNING AND DESIGN

APPROVED EBL — DATE 8-15-83
DIRECTOR, DEPARTMENT OF TRANSPORTATION

PREPARED AND RECOMMENDED BY

EUTHENICS INC.
Consulting Engineers
CLEVELAND, OHIO

STATE OF OHIO — DONALD W. KAMINSKI — 37099 — REGISTERED PROFESSIONAL ENGINEER

D.W. KAMINSKI

LINE DATA

	BEGIN PROJECT	END PROJECT	NET LENGTH
PROSPECT AVE.	STA. 9+82.48 TO	STA. 22+66.78 =	1,284.30 LIN. FT.
HURON ROAD	STA. 9+88.03 TO	STA. 30+24.61 =	2,036.58 LIN. FT.

NET LENGTH OF PROJECT = 3,320.88 LIN. FT. = 0.629 MILES

	BEGIN WORK	END WORK	NET LENGTH
PROSPECT AVE.	STA. 8+94.21 TO	STA. 23+01.78 =	1,407.57 LIN. FT.
HURON ROAD	STA. 8+10.96 TO	STA. 31+97.38 =	2,386.42 LIN. FT.

NET LENGTH OF WORK = 3,793.99 LIN. FT. = 0.719 MILES

STANDARD DRAWINGS	
NUMBER	DATE
BP-3	12-06-76
F-1	5-1-76
HL-4	1-21-76
HL-7	1-21-76
F-2	5-1-76
BP-7	12-6-76
BP-5	7-16-81
BP-12	7-7-81
MC-3	6-1-73
MC-9A	5-1-81

SUPPLEMENTAL SPECIFICATIONS	
NUMBER	DATE
803	5-27-83
824	10-8-82
853	6-26-78
956	6-26-78

STANDARD DRAWINGS	
NUMBER	DATE
TC-41.40	6-18-79
TC-41.20	3-26-79
TC-41.50	3-26-79
TC-52.10	4-3-79
TC-52.20	4-3-79
TC-71.10	4-9-79

Revised 3-19-84
Revised 3-13-84

DEPARTMENT OF TRANSPORTATION
FEDERAL HIGHWAY ADMINISTRATION

APPROVED:

DIVISION ADMINISTRATOR — DATE

FILE NO.	CUYAHOGA COUNTY	CUY.
	DATE OF LETTING	
	CONTRACT NO.	

FHWA REGION	STATE	PROJECT	
5	OHIO	M-ID 99(9)	

2/170

CUYAHOGA COUNTY
HURON/PROSPECT BRIDGE

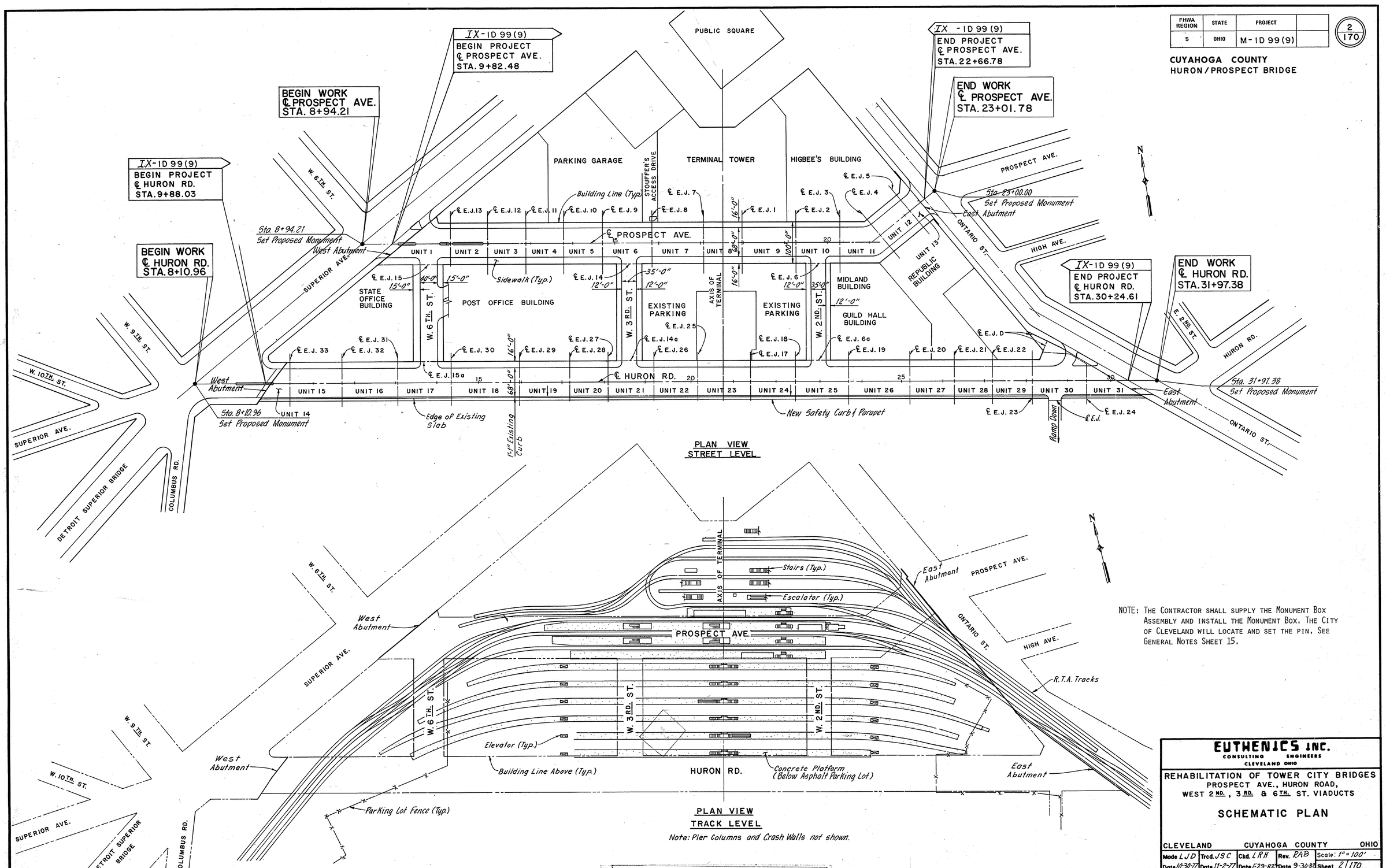

NOTE: THE CONTRACTOR SHALL SUPPLY THE MONUMENT BOX ASSEMBLY AND INSTALL THE MONUMENT BOX. THE CITY OF CLEVELAND WILL LOCATE AND SET THE PIN. SEE GENERAL NOTES SHEET 15.

EUTHENICS INC.
CONSULTING ENGINEERS
CLEVELAND OHIO

REHABILITATION OF TOWER CITY BRIDGES
PROSPECT AVE., HURON ROAD,
WEST 2ND., 3RD. & 6TH. ST. VIADUCTS

SCHEMATIC PLAN

CLEVELAND CUYAHOGA COUNTY OHIO

Mode LJD	Trcd. JSC	Ckd. LRH	Rev. RAB	Scale: 1" = 100'
Date 10-30-77	Date 11-2-77	Date 12-29-82	Date 9-30-82	Sheet 2/170

FHWA REGION	STATE	PROJECT	
5	OHIO	M-ID 99 (9)	

3 / 170

CUYAHOGA COUNTY
HURON/PROSPECT BRIDGE

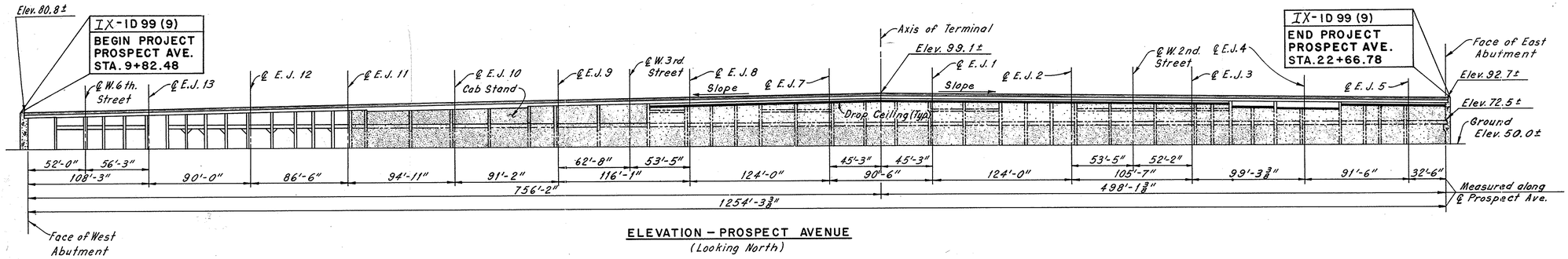

ELEVATION – PROSPECT AVENUE
(Looking North)

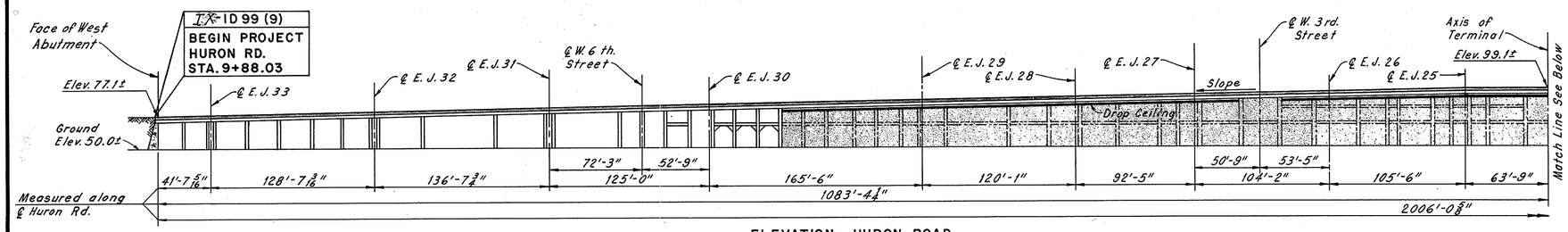

ELEVATION – HURON ROAD
(Looking North)

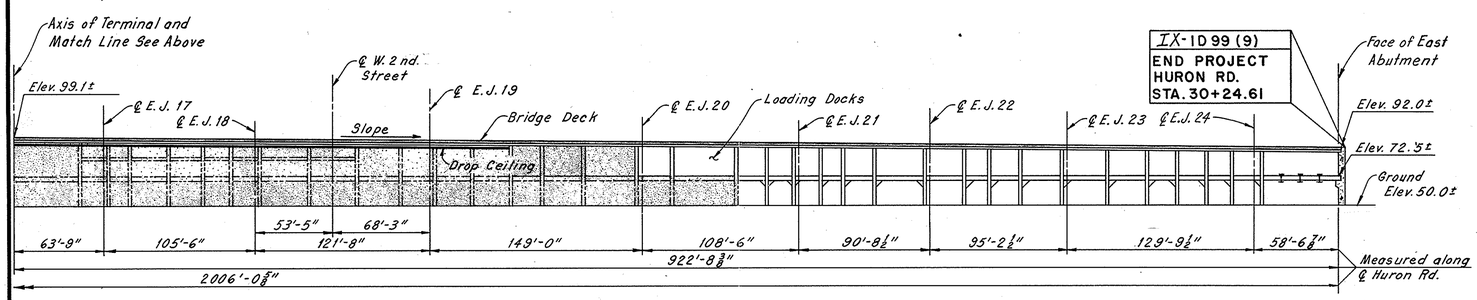

ELEVATION – HURON ROAD
(Looking North)

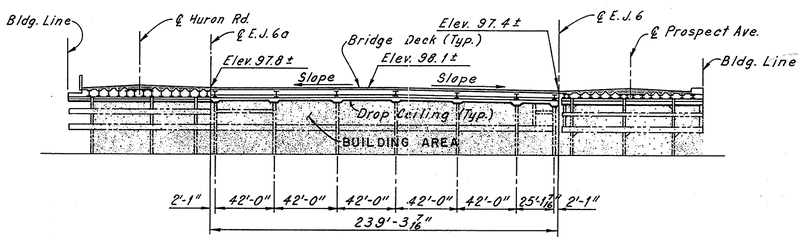

ELEVATION – W. 2ND. ST.
(Looking West)

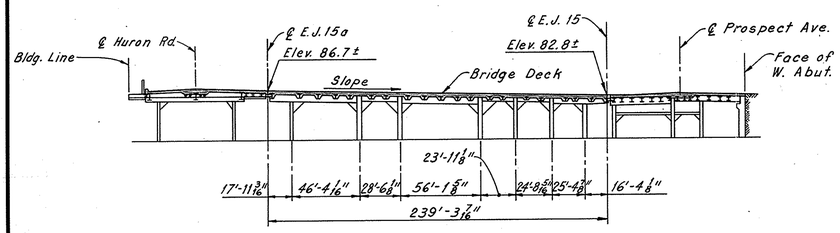

ELEVATION – W. 6TH. ST.
(Looking West)

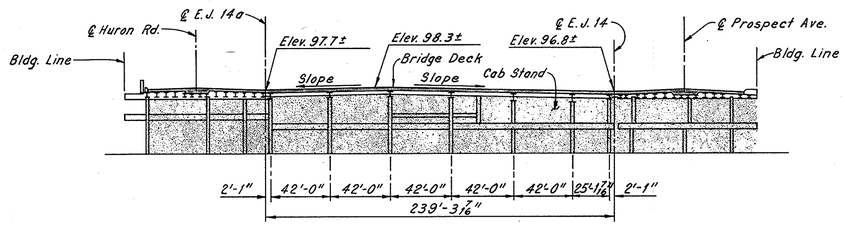

ELEVATION – W. 3RD. ST.
(Looking West)

NOTES:

THIS DRAWING IS A SCHEMATIC ONLY AND IS INTENDED TO SHOW THE GENERAL LAYOUT AND APPROXIMATE WORK LIMITS. SEE DETAIL SHEETS FOR WORK TO BE PERFORMED.

INDICATES BUILDING AREAS OR STRUCTURAL SUPPORTS FOR BUILDING AREAS, THE REHABILITATION OF WHICH IS NOT INCLUDED IN THE SCOPE OF WORK FOR THIS PROJECT.

ELEVATIONS SHOWN ARE ORIGINAL PLAN DIMENSIONS AND ARE FOR GENERAL REFERENCE ONLY. CONTRACTOR WILL BE RESPONSIBLE FOR OBTAINING EXISTING ELEVATIONS AS REQUIRED TO PERFORM THE WORK.

EUTHENICS INC.
CONSULTING ENGINEERS
CLEVELAND OHIO

REHABILITATION OF TOWER CITY BRIDGES
PROSPECT AVE., HURON ROAD,
WEST 2ND., 3RD. & 6TH. ST. VIADUCTS

SCHEMATIC ELEVATIONS

CLEVELAND CUYAHOGA COUNTY OHIO

Mode LJD	Trcd. JSC	Ckd. LRH	Rev. RAB	Scale: 1"=50'
Date 10-30-77	Date 11-2-77	Date 1-27-82	Date 9-30-82	Sheet 3/170

ALTERNATE ROUTE SIGNING PLAN

FHWA REGION	STATE	PROJECT	
5	OHIO	M-ID99(9)	

3A / 170

CUYAHOGA COUNTY
HURON / PROSPECT BRIDGE

SIGNING PLANS

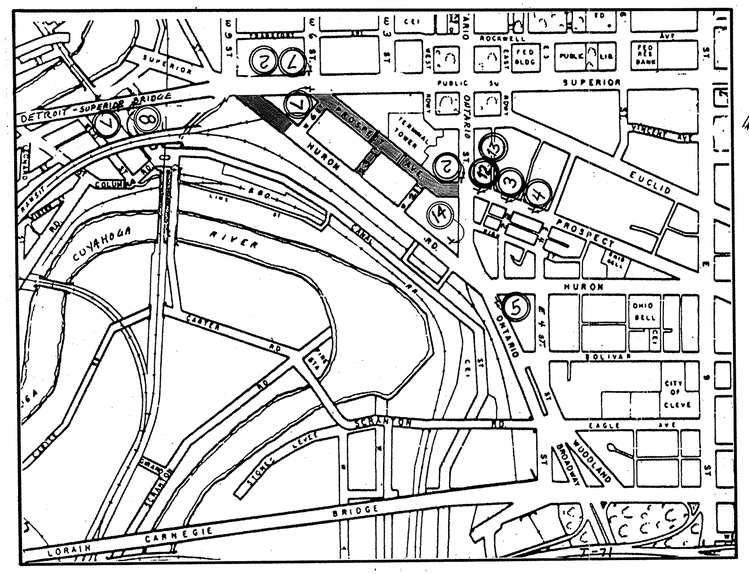

PHASE I-A, I, II & III CONSTRUCTION

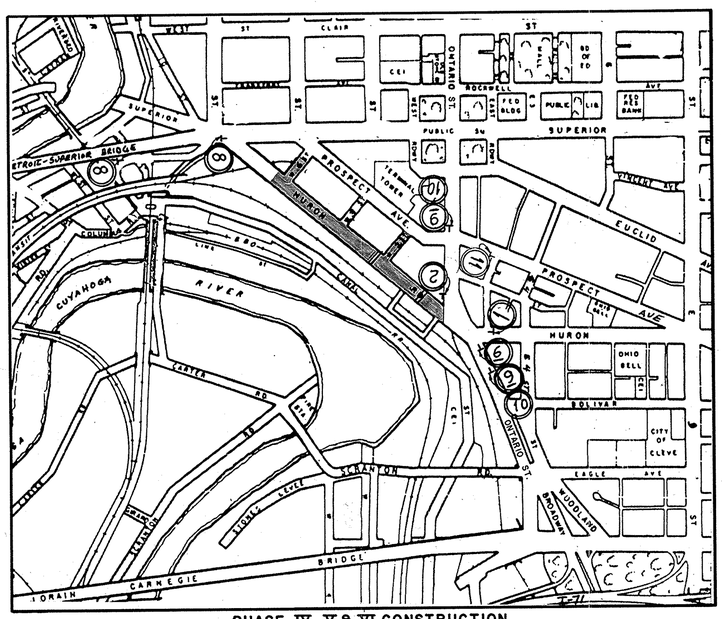

PHASE IV, V & VI CONSTRUCTION

SIGN LAYOUTS

(1) PHASE IV, V & VI
ROAD CONSTRUCTION AHEAD — OW-128-36

(2) PHASE I, II & VI
ROAD WORK AHEAD — OW-134-36

(3) PHASE I-A & I
DETOUR AHEAD — OW-127-36

(4) PHASE I-A, I, II & III
ROAD CLOSED AHEAD — OW-120-36

(5) PHASE I
PROSPECT AVE. — OC (48"x18")
CLOSED WEST OF ONTARIO ST. USE HURON RD. — OC (48"x48")

(6) PHASE IV
HURON RD. — OC (48"x18")
CLOSED WEST OF ONTARIO ST. USE PROSPECT AVE. — OC (48"x48")

(7) PHASE I
PROSPECT AVE. — OC (48"x18")
CLOSED EAST OF WEST 3rd. St. — OC (48"x36")

(7) PHASE II
PROSPECT AVE. — OC (48"x18")
CLOSED EAST OF WEST 6th. St. — OC (48"x36")

(7) PHASE III
PROSPECT AVE. — OC (48"x18")
ROAD CLOSED — OC (48"x36")

(8) PHASE I-A & IV
HURON RD. — OC (48"x18")
ROAD CLOSED USE PROSPECT AVE. — OC (48"x48")

(8) PHASE V
HURON RD. — OC (48"x18")
ROAD CLOSED EAST OF WEST 3rd. St. — OC (48"x48")

(8) PHASE VI
HURON RD. — OC (48"x18")
ROAD CLOSED EAST OF WEST 2nd. St. — OC (48"x48")

(9) PHASE VI
HURON RD. CLOSED WEST OF ONTARIO ST. — OC (48"x48")

(10)
HURON RD. WILL BE CLOSED WEST OF ONTARIO — OC (54"x54")
DATE
ERECT TWO WEEKS PRIOR TO THE PHASE VI CLOSING

(11) PHASE IV, V & VI
HURON RD. — OC (48"x48")
DETOUR → — OC-29R

(12) PHASE II
PROSPECT AVE. — OC (48"x18")
CLOSED WEST OF WEST 2nd. St. — OC (48"x48")

(13) PHASE III
PROSPECT AVE. — OC (48"x48")
CLOSED WEST OF WEST 3rd St. — OC (48"x48")

(14) PHASE I-A
HURON RD. — OC (48"x18")
ROAD CLOSED WEST OF WEST 6th. St. — OC (48"x48")

NOTE:
For Alternate Route Signing Quantities see Sheet 134.

TRAFFIC NOTES

ITEM 614, MAINTENANCE OF TRAFFIC

This shall include all work necessary to maintain traffic as shown on the various Construction Sequence Drawings, Traffic Maintenance Drawings, Traffic Management Plan Documents and shall include all work for which no specific separate pay item is provided.

1. All required detour signs shall be in accordance with the Ohio Manual of Uniform Traffic Control Devices for Streets and Highways, current edition, latest revision.
2. All the detour signs within the work limits shall be provided, erected, maintained and removed by the Contractor.
3. All the detour signs outside the project work limits shall be provided by the Contractor and will be erected, maintained and removed by the City Traffic Engineering Department.
4. For detour sign layouts within the work limits see Sheets 4 thru 9.
5. The Contractor shall furnish and maintain all necessary safeguards such as barricades, safety barriers, lighting, flagmen, temporary guard rail, precast concrete barriers and such other traffic control devices as provided in "Item 614 - Maintaining traffic" so as to avoid damage or injury to vehicles and pedestrains during construction.
6. Flat sheet signs furnished by the Contractor in accordance with the requirements of the Plans, Specifications and proposal which become damaged by traffic for reasons beyond the control of the Contractor shall be replaced in kind when ordered by the Engineer. Payment for the new signs shall be made at the bid price per square foot for Item Special Replacement Signs and shall include the cost of removing and disposing of the damaged signs, hardware, supports and providing necessary replacement hardware, supports, etc. Replacement signs shall be new but other materials may be used, subject to approval by the Engineer. An estimated quantity of Item Special - Replacement Signs has been carried to the General Summary Sheet:

   Item Special — Replacement Signs — 100 So. Ft.

7. Signs for a particular phase of work which are erected prior to implementation of that phase of traffic control, or which remain in place following that phase, shall be covered with a sturdy opaque material.
8. Prior to converting from one phase of traffic control to a subsequent phase all signs shall be in place and covered, or if this is physically impossible, the sign support and all other materials shall be pre-fabricated to the extent possible and stock piled at an appropriate location on the project for immediate installation or erection. The Contractor shall provide sufficient personnel and equipment to assure that signs and supports may be covered, uncovered, removed or erected in a short period of time.
9. Safe Pedestrian traffic - The Contractor's attention is directed to the need for providing adequate protection for pedestrian traffic in the vicinity of this project. The Contractor shall provide and maintain such temporary protection facilities as the Engineer deems necessary to accommodate, in a reasonable and safe manner, all pedestrian traffic. The following estimated quantites have been included in the General Summary and are to be used as directed by the Engineer to maintain safe pedestrian traffic:

   Item 607 — Fence, Type Snow, as per plan — 200 Lin. Ft.

10. Payment for all the above except

   Item 606 — Temporary Beam Rail
   Item 607 — Fence, Type Snow, as per plan
   Item 622 — Temporary Precast Concrete Barriers
   Item Special — Replacement Signs

   shall be included in the lump sum bid for Item 614 - Maintaining Traffic.

SCALE As Noted
MADE LJD DATE 10-1-82
TRCD. LJD DATE 10-4-82
CKD. RAB DATE 10-10-82

EUTHENICS INC.
CONSULTING ENGINEERS
CLEVELAND OHIO

500 0 500 1000 1500 2000
SCALE IN FEET

ALTERNATE ROUTE SIGNING PLANS, SIGN LAYOUTS & MAINTENANCE OF TRAFFIC NOTES

FHWA REGION	STATE	PROJECT	
5	OHIO	M-ID 99 (9)	

4
170

CUYAHOGA COUNTY
HURON/ PROSPECT BRIDGE

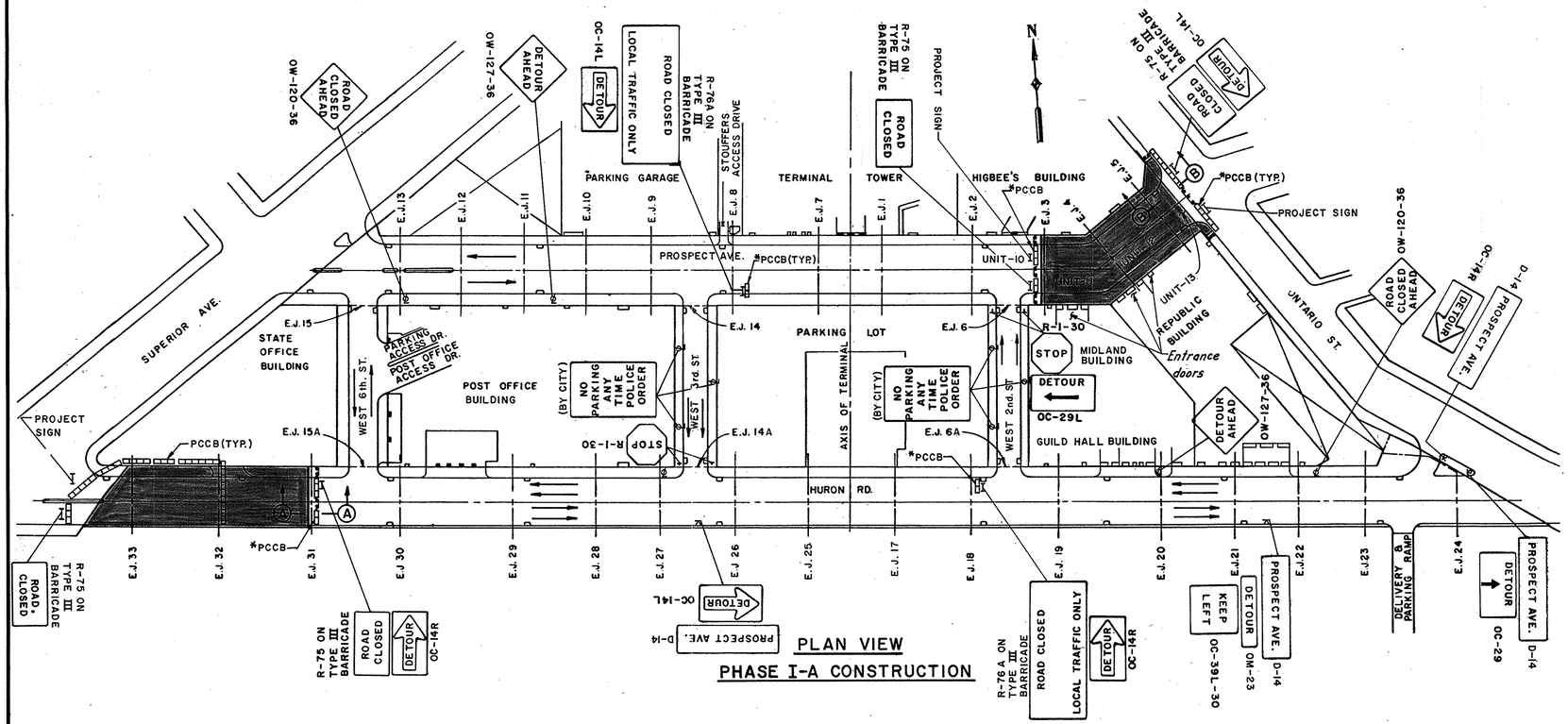

PLAN VIEW
PHASE I-A CONSTRUCTION

PHASE I-A CONSTRUCTION

1. Erect temporary barricades where shown. Provide warning devices and temporary signing as required to divert traffic and maintain local access to all affected properties. One way traffic to be maintained on West 2nd and West 3rd Streets with no parking. Access for emergency vehicles shall be maintained on Prospect at all times.
2. The Contractor shall provide seventy-two (72) hour notice to the City Traffic Engineering Department prior to closing Prospect Avenue for Phase I-A construction. After the road is closed the City Traffic Engineering Department will remove and salvage all existing signs within the Phase I-A construction area.
3. All parking meters shall be removed within the limits of Phase I-A construction area, along West 2nd and 3rd Streets, where shown on the Plans and/or as directed by the Division of Traffic Engineering. City of Cleveland (see General Notes).
4. Access must be maintained to the State Office Building driveway.
5. Pedestrian access into the Republic and Midland Buildings from Prospect Avenue and into the Terminal Tower and Higbees must be maintained at all times during this phase.
6. Work on Phase I shall not begin until Huron Road is opened to thru traffic.
7. For limits of deck repairs see Street Surface Plans Sheets 19, 20 & 26.
8. Contractor must provide a system of bulkheads and temporary drainage to prevent the flow of water into the openings thru the deck slab on Prospect. See General Notes Interim Drainage Sheet 13.

TEMPORARY BARRIER QUANTITIES				
ITEM	DESCRIPTION	NUMBER	UNIT	QUANTITY
622	PCCB (10'-0" Lengths)	61	Lin. Ft.	610
606	Temp. Beam Rail (12'-6")	9	Lin. Ft.	112.5

Notes:
Quantities carried to general summary sheet 17A and 17C.
Temp. Beam Rail and PCCB shall be re-used from phase to phase if acceptable to the Engineer.

NOTES: Precast concrete barriers shall be used as temporary barricades with Guardrail on barrels used as access openings for emergency vehicles.

LEGEND

- Indicates Areas under construction in this Phase
- PCCB — Indicates Temporary Precast Concrete Barrier (10'-0" Lengths)
- *PCCB — Indicates Temporary Precast Concrete Barrier (10'-0" Lengths) with access for Emergency Vehicles
- Indicates Temporary Sign Support
- Indicates Temporary Beam Rail on Barrels

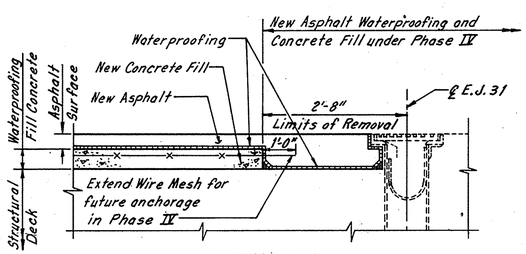

SECTION A-A

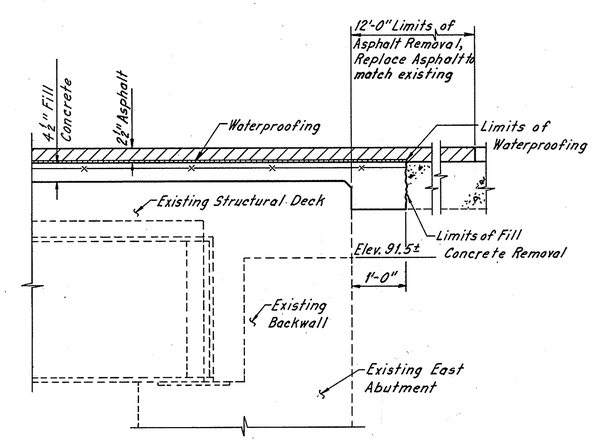

SECTION B-B

EUTHENICS INC.
CONSULTING ENGINEERS
CLEVELAND OHIO

REHABILITATION OF TOWER CITY BRIDGES
PORTIONS OF PROSPECT AVE., HURON RD., WEST 2nd. & 3rd. ST. VIADUCTS

MAINTENANCE OF TRAFFIC
PHASE I-A CONSTRUCTION

CLEVELAND CUYAHOGA COUNTY OHIO

Made JSC	Trcd. JSC	Ckd. LJD	Rev. RAB	Scale: No Scale
Date 3-30-83	Date 3-30-83	Date 3-31-83	Date 4-1-83	Sheet 4 / 170

FHWA REGION	STATE	PROJECT	
5	OHIO	M-ID 99 (9)	

4A / 170

CUYAHOGA COUNTY
HURON/ PROSPECT BRIDGE

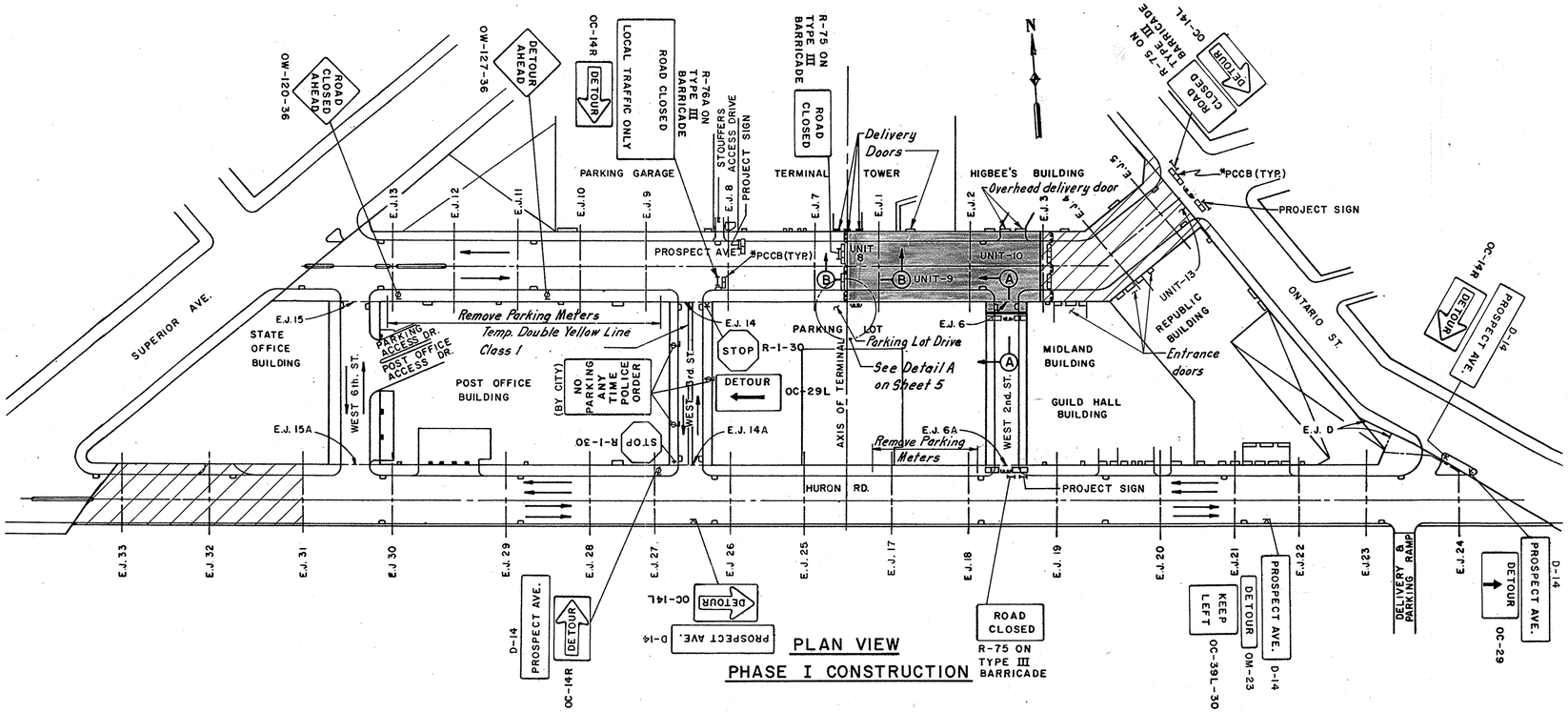

PLAN VIEW
PHASE I CONSTRUCTION

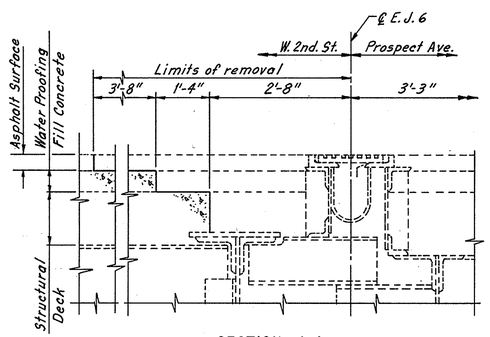

SECTION A-A
Removal Limits

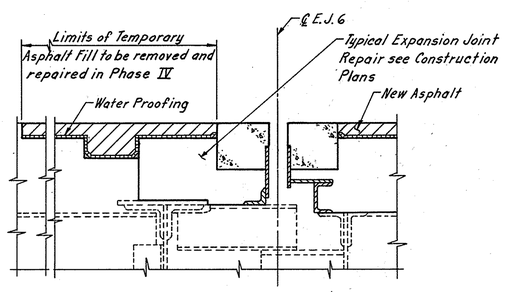

SECTION A-A
Replacement Limits

TEMPORARY BARRIER QUANTITIES				
ITEM	DESCRIPTION	NUMBER	UNIT	QUANTITY
622	PCCB (10'-0" LENGTHS)	22	LIN. FT.	220
606	TEMP. BEAM RAIL (12'-6")	8	LIN. FT.	100
614	TEMP. CENTER LINE, CLASS I (PAINT)		MILES	0.05

NOTES:
QUANTITIES CARRIED TO GENERAL SUMMARY SHEET 17A and 17C.
TEMP. BEAM RAIL & PCCB SHALL BE RE-USED FROM PHASE TO PHASE IF ACCEPTABLE TO THE ENGINEER.

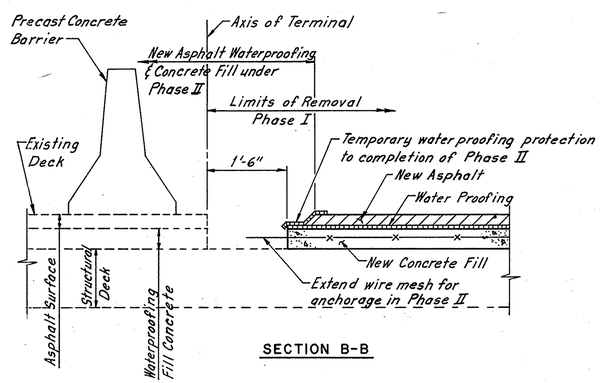

SECTION B-B

NOTES: PRECAST CONCRETE BARRIERS SHALL BE USED AS TEMPORARY BARRICADES WITH GUARDRAIL ON BARRELS USED AS ACCESS OPENINGS FOR EMERGENCY VEHICLES.

PHASE I CONSTRUCTION

1. ERECT TEMPORARY BARRICADES WHERE SHOWN. PROVIDE WARNING DEVICES AND TEMPORARY SIGNING AS REQUIRED TO DIVERT TRAFFIC AND MAINTAIN LOCAL ACCESS TO ALL AFFECTED PROPERTIES. TWO WAY TRAFFIC TO BE MAINTAINED ON WEST 3RD STREET WITH NO PARKING. ACCESS FOR EMERGENCY VEHICLES SHALL BE MAINTAINED AT ALL TIMES.
2. THE CONTRACTOR SHALL PROVIDE SEVENTY-TWO (72) HOUR NOTICE TO THE CITY TRAFFIC ENGINEERING DEPARTMENT PRIOR TO CLOSING PROSPECT AVENUE FOR PHASE I CONSTRUCTION. AFTER THE ROAD IS CLOSED THE CITY TRAFFIC ENGINEERING DEPARTMENT WILL REMOVE AND SALVAGE ALL EXISTING SIGNS WITHIN THE PHASE I CONSTRUCTION AREA.
3. ALL PARKING METERS SHALL BE REMOVED WITHIN THE LIMITS OF PHASE I CONSTRUCTION AREA, ALONG WEST 2ND AND 3RD STREETS, WHERE SHOWN ON THE PLANS AND/OR AS DIRECTED BY THE DIVISION OF TRAFFIC ENGINEERING, CITY OF CLEVELAND (SEE GENERAL NOTES).
4. ACCESS TO ONE OF THE DELIVERY DOORS TO THE TERMIANL TOWER AND PROVISION FOR DELIVERY TRUCK PARKING MUST BE MAINTAINED AT ALL TIMES DURING THE PHASE.
5. ACCESS MUST BE MAINTAINED TO ONE OF THE OVERHEAD DELIVERY DOORS AT HIGBEE'S ALONG THE NORTH SIDE OF PROSPECT AVENUE AT ALL TIMES DURING THIS PHASE.
6. PEDESTRIAN ACCESS INTO THE REPUBLIC AND MIDLAND BUILDINGS FROM PROSPECT AVENUE AND INTO THE TERMINAL TOWER AND HIGBEES MUST BE MAINTAINED AT ALL TIMES DURING THIS PHASE.
7. ACCESS INTO AND OUT OF THE PARKING LOT ON THE SOUTH SIDE OF PROSPECT AVENUE BETWEEN WEST 2ND AND 3RD STREETS MUST BE MAINTAINED AT ALL TIMES DURING THIS PHASE (SEE DETAIL A, SHEET NO. 5).
8. CONTRACTOR MUST PROVIDE FIFTEEN(15) DAYS WRITTEN NOTICE TO THE ENGINEER BEFORE CLOSING ANY OF THE DELIVERY DOORS AT HIGBEES OR THE TERMINAL TOWER.
9. FOR LIMITS OF DECK REPAIRS SEE STREET SURFACE PLANS SHEETS 19 & 20.
10. CONTRACTOR MUST PROVIDE A SYSTEM OF BULKHEADS AND TEMPORARY DRAINAGE TO PREVENT THE FLOW OF WATER INTO THE OPENINGS THRU THE DECK SLAB. SEE GENERAL NOTES INTERIM DRAINAGE SHEET 13.

LEGEND

- INDICATES AREAS UNDER CONSTRUCTION IN THIS PHASE
- PCCB — INDICATES TEMPORARY PRECAST CONCRETE BARRIER (10'-0" LENGTHS)
- *PCCB — INDICATES TEMPORARY PRECAST CONCRETE BARRIER (10'-0" LENGTHS) WITH ACCESS FOR EMERGENCY VEHICLES
- INDICATES TEMPORARY SIGN SUPPORT
- INDICATES TEMPORARY BEAM RAIL ON BARRELS

EUTHENICS INC.
CONSULTING ENGINEERS
CLEVELAND OHIO

REHABILITATION OF TOWER CITY BRIDGES
PORTIONS OF PROSPECT AVE., HURON RD., WEST 2nd. & 3rd. ST. VIADUCTS

MAINTENANCE OF TRAFFIC
PHASE I CONSTRUCTION

CLEVELAND — CUYAHOGA COUNTY — OHIO

Made LRH	Trcd. JSC	Ckd. LJD	Rev. RAB	Scale: No Scale
Date 8-16-82	Date 8-17-82	Date 8-18-82	Date 9-2-82	Sheet 4A / 170

FHWA REGION	STATE	PROJECT	
5	OHIO	M-ID 99(9)	

5/170

CUYAHOGA COUNTY
HURON / PROSPECT BRIDGE

PHASE II CONSTRUCTION

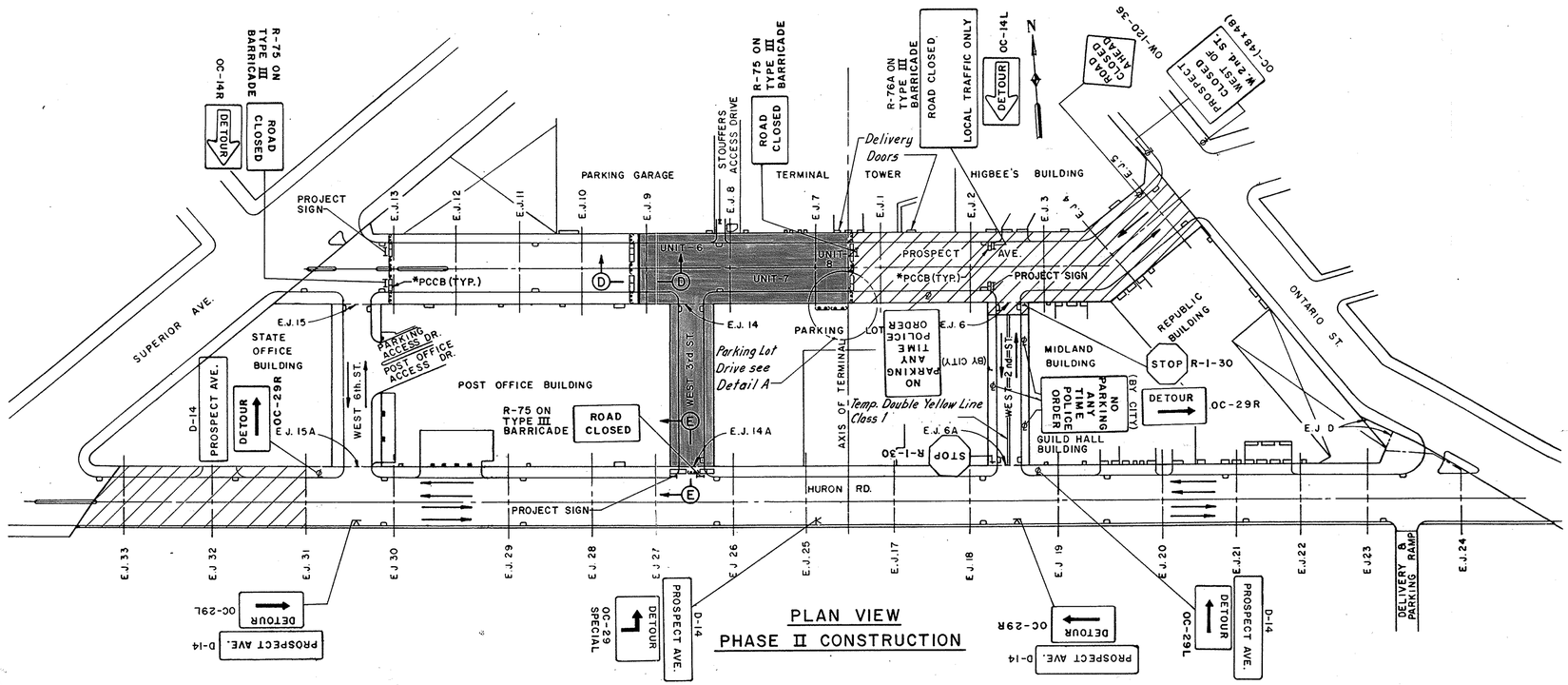

PLAN VIEW
PHASE II CONSTRUCTION

1. PROVIDE PERMANENT SIGNING AND STRIPING IN PHASE I CONSTRUCTION AREA AS DIRECTED BY THE ENGINEER PRIOR TO REMOVING PHASE I BARRICADES.
2. THE CONTRACTOR SHALL PROVIDE SEVENTY-TWO (72) HOURS NOTICE TO THE CITY TRAFFIC ENGINEERING DEPARTMENT PRIOR TO CHANGE OVER FROM PHASE I TO PHASE II. AFTER PHASE II ROADWAY IS CLOSED TO TRAFFIC THE CITY TRAFFIC ENGINEERING DEPARTMENT WILL REMOVE AND SALVAGE ALL EXISTING PERMANENT SIGNS WITHIN PHASE II CONSTRUCTION AREA.
3. RELOCATE TEMPORARY BARRICADES WHERE SHOWN. PROVIDE WARNING DEVICES AND TEMPORARY SIGNING AS REQUIRED TO DIVERT TRAFFIC AND MAINTAIN LOCAL ACCESS TO ALL AFFECTED PROPERTIES.
4. TWO WAY TRAFFIC TO BE MAINTAINED ON WEST 2ND STREET WITH NO PARKING.
5. ALL PARKING METERS SHALL BE REMOVED WITHIN THE LIMITS OF PHASE II CONSTRUCTION AREA.
6. ACCESS MUST BE MAINTAINED FOR TRUCK DELIVERIES INTO THE STOUFFERS RECEIVING DRIVE AND THE DELIVERY DOORS TO THE TERMINAL TOWER AT ALL TIMES DURING THIS PHASE. PROVISIONS MUST BE MADE FOR DELIVERY TRUCK PARKING OUTSIDE OF THE CONSTRUCTION AREA.
7. CONTRACTOR MUST PROVIDE FIFTEEN (15) DAYS WRITTEN NOTICE TO THE ENGINEER PRIOR TO DOING ANY WORK AROUND THE STOUFFERS RECEIVING DRIVE AND THE DELIVERY DOORS TO THE TERMINAL TOWER.
8. PROCEED WITH REMOVAL AND REPLACEMENT OF THE DECK AND SUPPORTING STEEL WITHIN AREAS SHOWN. FOR LIMITS OF DECK REPAIRS SEE STREET SURFACE PLANS.
9. CONTRACTOR MUST PROVIDE A SYSTEM OF BULKHEADS AND TEMPORARY DRAINAGE TO PREVENT THE FLOW OF WATER INTO THE OPENINGS THRU THE DECK SLAB. SEE GENERAL NOTES SHEET 13.

TEMPORARY BARRIER QUANTITIES

ITEM	DESCRIPTION	NUMBER	UNIT	QUANTITY
622	PCCB (10'-0" LENGTHS)	22	LIN. FT.	220
606	TEMP. BEAM RAIL (12'-6")	13	LIN. FT.	162.5
614	TEMP. CENTER LINE, CLASS I (PAINT)		MILES	0.05

NOTES: QUANTITIES CARRIED TO GENERAL SUMMARY SHEET 17A and 17C.
TEMP. BEAM RAIL & PCCB SHALL BE RE-USED FROM PHASE TO PHASE IF ACCEPTABLE TO THE ENGINEER.

NOTE: PRECAST CONCRETE BARRIERS SHALL BE USED AS TEMPORARY BARRICADES WITH GUARDRAIL ON BARRELS USED AS ACCESS OPENINGS FOR EMERGENCY VEHICLES.

LEGEND

- INDICATES AREAS COMPLETED UNDER EARLIER PHASES
- INDICATES AREAS UNDER CONSTRUCTION IN THIS PHASE
- PCCB — INDICATES TEMPORARY PRECAST CONCRETE BARRIER (10'-0" LENGTHS)
- *PCCB — INDICATES TEMPORARY PRECAST CONCRETE BARRIER (10'-0" LENGTHS) WITH ACCESS FOR EMERGENCY VEHICLES
- INDICATES TEMPORARY SIGN SUPPORT
- INDICATES TEMPORARY BEAM RAIL ON BARRELS

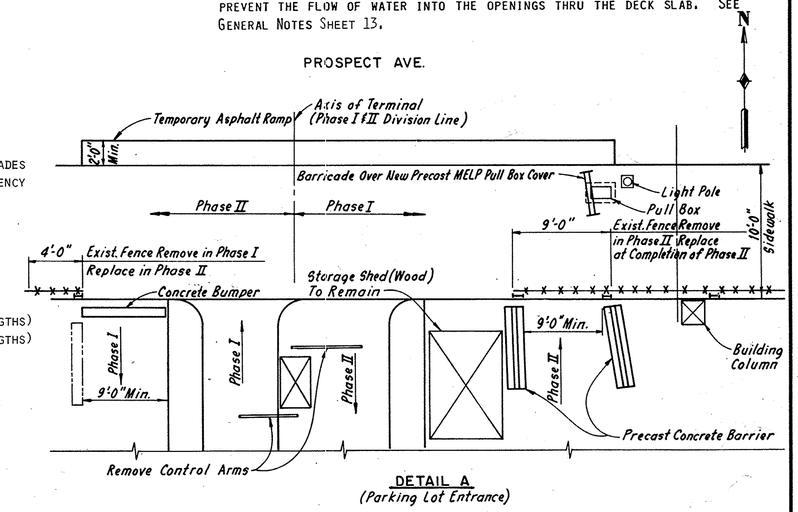

DETAIL A
(Parking Lot Entrance)

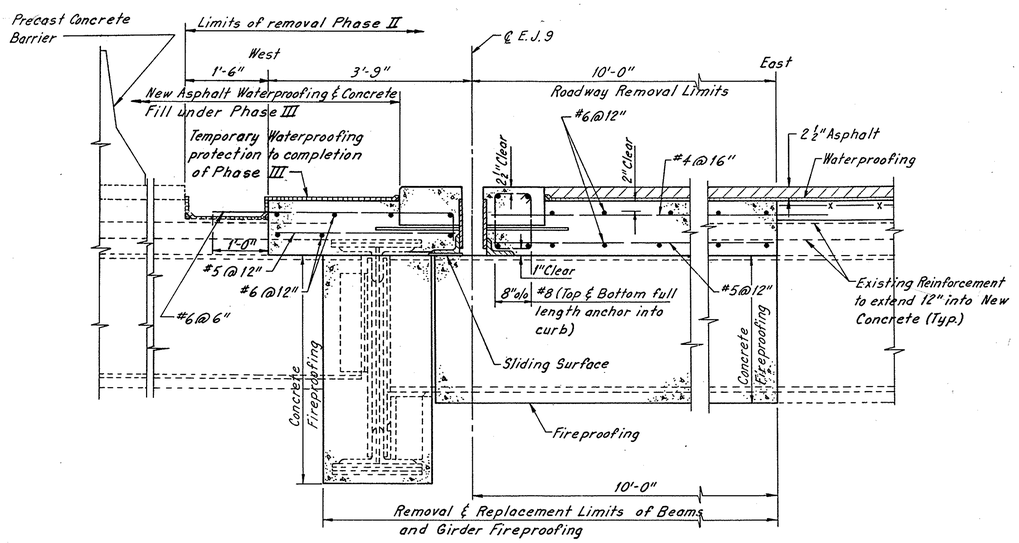

SECTION D-D

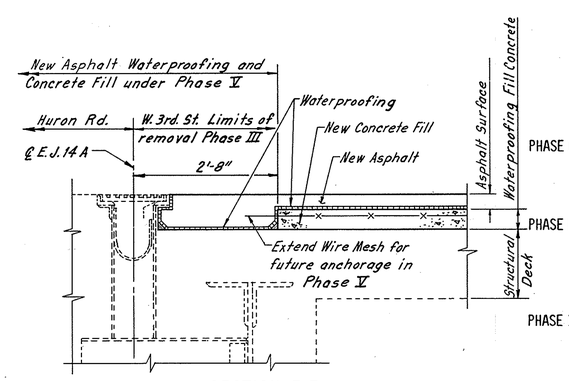

SECTION E-E

PHASE I: REMOVE 4'-0" PORTION OF FENCE AND ADJUST CONCRETE BUMPER. REMOVE CONTROL ARMS. PROVIDE INGRESS AND EGRESS AS SHOWN PLACE TEMPORARY ASPHALT RAMP.

PHASE II: REMOVE 9'-0" PORTION OF FENCE AND ADJUST CONCRETE BARRIER BACK TO ORIGINAL LOCATION. REMOVE CONTROL ARM, PLACE BARRICADES. PROVIDE INGRESS AND EGRESS AS SHOWN. PLACE TEMPORARY ASPHALT RAMP.

PHASE III: REPAIR FENCE, RESTORE AREA TO ORIGINAL CONDITION. PLACE ASPHALT RAMP FULL WIDTH OF INGRESS AND EGRESS PLUS SIX FEET ON EACH END.

EUTHENICS INC.
CONSULTING ENGINEERS
CLEVELAND OHIO

REHABILITATION OF TOWER CITY BRIDGES
PORTIONS OF PROSPECT AVE., HURON RD., WEST 2nd. & 3rd. ST. VIADUCTS

MAINTENANCE OF TRAFFIC
PHASE II CONSTRUCTION

CLEVELAND — CUYAHOGA - COUNTY — OHIO

Made LRH	Trcd. JSC	Ckd. LJD	Rev. RAB	Scale: No Scale
Date 8-23-82	Date 8-24-82	Date 8-27-82	Date 9-9-82	Sheet 5/170

FHWA REGION	STATE	PROJECT	
5	OHIO	M-ID 99(9)	

6 / 170

CUYAHOGA COUNTY
HURON/ PROSPECT BRIDGE

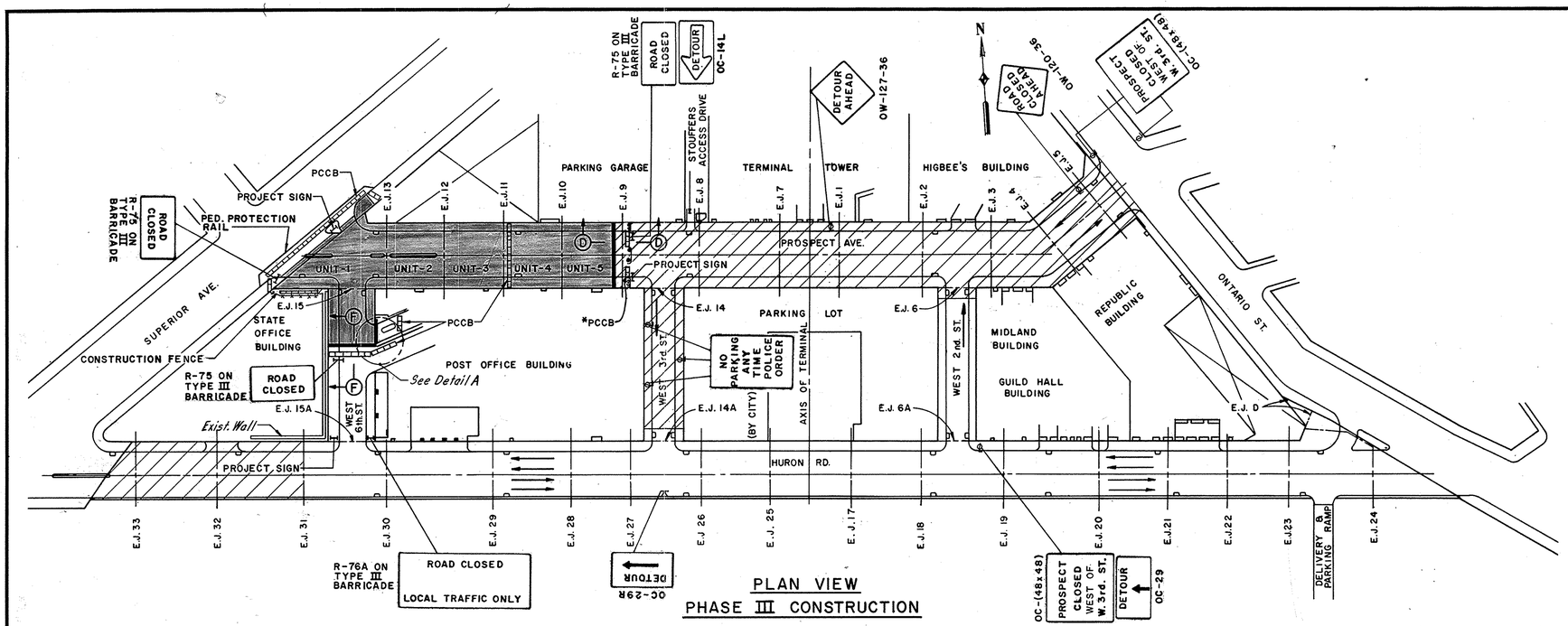

PLAN VIEW
PHASE III CONSTRUCTION

PHASE III CONSTRUCTION

1. PROVIDE PERMANENT SIGNING AND STRIPING IN PHASE II CONSTRUCTION AREA AS DIRECTED BY THE ENGINEER PRIOR TO REMOVING PHASE II BARRICADES.
2. THE CONTRACTOR SHALL PROVIDE SEVENTY-TWO (72) HOURS NOTICE TO THE CITY TRAFFIC ENGINEERING DEPARTMENT PRIOR TO CHANGE OVER FROM PHASE II TO PHASE III.
3. RELOCATE TEMPORARY BARRICADES WHERE SHOWN. PROVIDE WARNING DEVICES AND TEMPORARY SIGNING AS REQUIRED TO DIVERT TRAFFIC AND MAINTAIN LOCAL ACCESS TO ALL AFFECTED PROPERTIES. ONE-WAY TRAFFIC TO BE MAINTAINED ON WEST 2ND AND 3RD STREETS WITH NO PARKING.
4. AFTER PHASE III ROADWAY IS CLOSED TO TRAFFIC THE CITY TRAFFIC ENGINEERING DEPARTMENT WILL REMOVE AND SALVAGE ALL EXISTING PERMANENT SIGNS WITHIN PHASE III CONSTRUCTION AREA.
5. PRIOR TO THE START OF CONSTRUCTION ON WEST 6TH STREET. THE CONTRACTOR SHALL PROVIDE A TEMPORARY TOLL BOOTH AT THE BOTTOM OF THE RAMP TO THE UNDERDECK PARKING GARAGE AND REMOVE THE SECTION OF GUARDRAIL BETWEEN RAMPS TO PERMIT ACCESS AS SHOWN IN DETAIL A.
6. THE CONTRACTOR SHALL CONSTRUCT A CONSTRUCTION FENCE TO PROTECT PEDESTRAINS ALONG THE STATE OFFICE BUILDING PROPERTY AT PROSPECT AVENUE.
7. THE CONTRACTOR MUST PROVIDE FIFTEEN(15) DAYS WRITTEN NOTICE TO THE ENGINEER PRIOR TO DOING ANY WORK IN THIS PHASE.
8. PROCEED WITH THE REMOVAL AND REPLACEMENT OF THE DECK AND SUPPORTING STEEL WITHIN THE AREAS SHOWN. FOR LIMITS OF DECK REPAIRS SEE STREET SURFACE PLANS.
9. THE CONTRACTOR MUST PROVIDE A SYSTEM OF BULKHEADS AND TEMPORARY DRAINAGE TO PREVENT THE FLOW OF WATER INTO THE OPENINGS THRU THE DECK SLAB. SEE GENERAL NOTES SHEET 13.

NOTE: PRECAST CONCRETE BARRIERS SHALL BE USED AS TEMPORARY BARRICADES WITH GUARDRAIL ON BARRELS USED AS ACCESS OPENINGS FOR EMERGENCY VEHICLES.

LEGEND

- INDICATES AREAS COMPLETED UNDER EARLIER PHASES
- INDICATES AREAS UNDER CONSTRUCTION IN THIS PHASE
- PCCB — INDICATES TEMPORARY PRECAST CONCRETE BARRIER (10'-0" LENGTHS)
- *PCCB — INDICATES TEMPORARY PRECAST CONCRETE BARRIER (10'-0" LENGTHS) WITH ACCESS FOR EMERGENCY VEHICLES
- INDICATES TEMPORARY SIGN SUPPORT
- INDICATES TEMPORARY BEAM RAIL ON BARRELS

NOTE: FOR SECTION D-D SEE PHASE II CONSTRUCTION SHEET No. 5.

TEMPORARY BARRIER QUANTITIES

ITEM	DESCRIPTION	NUMBER	UNIT	QUANTITY
622	PCCB (10'-0" LENGTHS)	59	LIN. FT.	590
606	TEMP. BEAM RAIL (12'-6")	3	LIN. FT.	37.5

NOTES:
QUANTITIES CARRIED TO GENERAL SUMMARY SHEET 17A and 17C.
TEMP. BEAM RAIL & PCCB SHALL BE RE-USED FROM PHASE TO PHASE IF ACCEPTABLE TO THE ENGINEER.

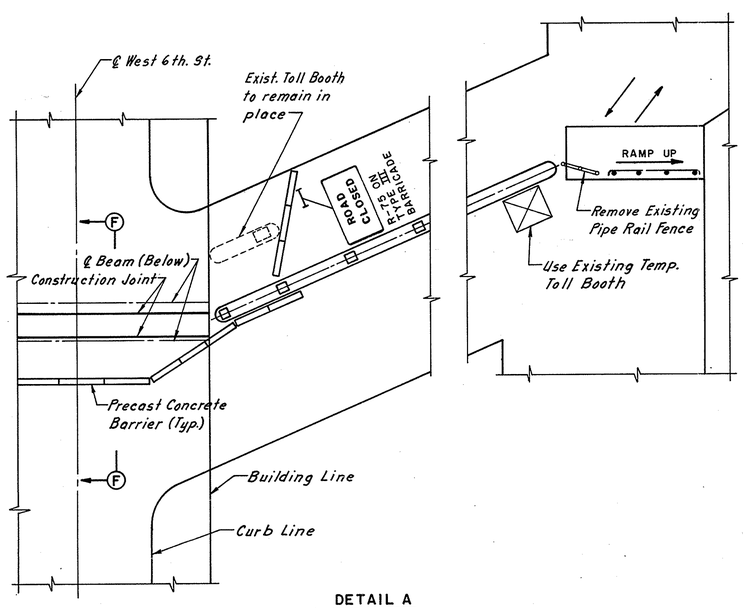

DETAIL A

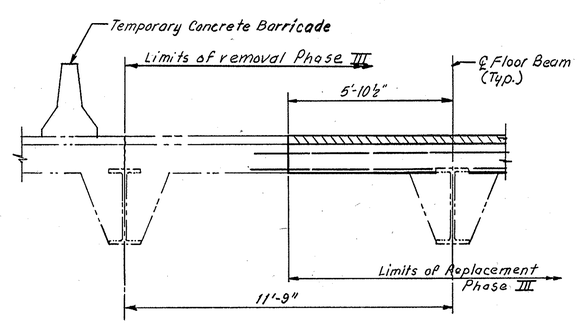

SECTION F-F

EUTHENICS INC.
CONSULTING ENGINEERS
CLEVELAND OHIO

REHABILITATION OF TOWER CITY BRIDGES
PORTIONS OF PROSPECT AVE., HURON RD., WEST 2nd. & 3rd. ST. VIADUCTS

MAINTENANCE OF TRAFFIC
PHASE III CONSTRUCTION

CLEVELAND CUYAHOGA COUNTY OHIO

Made LRH	Trcd. JSC	Ckd. LJD	Rev. RAB	Scale: No Scale
Date 8-17-82	Date 8-18-82	Date 8-20-82	Date 9-8-82	Sheet 6 / 170

FHWA REGION	STATE	PROJECT	
5	OHIO	M-ID 99(9)	

CUYAHOGA COUNTY
HURON / PROSPECT BRIDGE

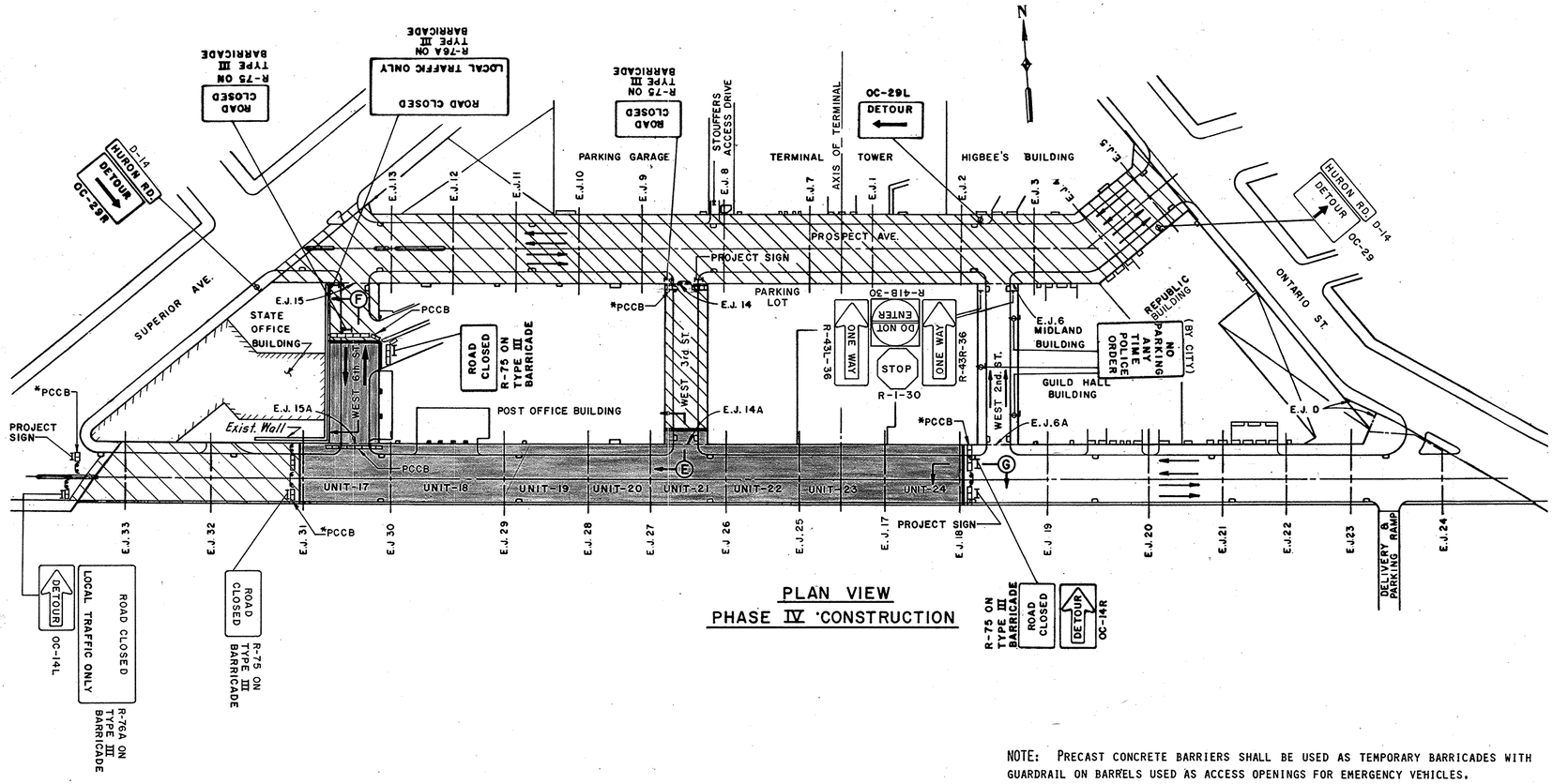

PLAN VIEW
PHASE IV CONSTRUCTION

PHASE IV CONSTRUCTION

1. PROVIDE PERMANENT SIGNING AND STRIPING IN PHASE III CONSTRUCTION AREA AS DIRECTED BY THE ENGINEER PRIOR TO REMOVING PHASE III BARRICADES.
2. THE CONTRACTOR SHALL PROVIDE SEVENTY-TWO (72) HOURS NOTICE TO THE CITY TRAFFIC ENGINEERING DEPARTMENT PRIOR TO CHANGE OVER FROM PHASE III TO PHASE IV.
3. RELOCATE TEMPORARY BARRICADES WHERE SHOWN. PROVIDE WARNING DEVICES AND TEMPORARY SIGNING AS REQUIRED TO DIVERT TRAFFIC AND MAINTAIN LOCAL ACCESS TO ALL AFFECTED PROPERTIES. MAINTAIN ONE-WAY TRAFFIC WITH NO PARKING ON WEST 2ND STREET.
4. AFTER PHASE IV ROADWAY IS CLOSED TO TRAFFIC THE CITY TRAFFIC ENGINEERING DEPARTMENT WILL REMOVE AND SALVAGE ALL EXISTING PERMANENT SIGNS WITHIN PHASE IV CONSTRUCTION AREA.
5. THE CONTRACTOR MUST PROVIDE FIFTEEN (15) DAYS WRITTEN NOTICE TO THE ENGINEER PRIOR TO DOING ANY WORK IN THIS PHASE.
6. REMOVE CONSTRUCTION FENCE ON PROSPECT AVENUE.
7. PROCEED WITH REMOVAL AND REPLACEMENT OF THE DECK AND SUPPORTING STEEL WITHIN AREA SHOWN. FOR LIMITS OF DECK REPAIRS SEE STREET SURFACE PLANS.
8. THE CONTRACTOR MUST PROVIDE A SYSTEM OF BULKHEADS AND TEMPORARY DRAINAGE TO PREVENT THE FLOW OF WATER INTO THE OPENINGS THRU THE DECK SLAB. SEE GENERAL NOTES SHEET 13.

NOTE: PRECAST CONCRETE BARRIERS SHALL BE USED AS TEMPORARY BARRICADES WITH GUARDRAIL ON BARRELS USED AS ACCESS OPENINGS FOR EMERGENCY VEHICLES.

LEGEND

- INDICATES AREAS COMPLETED UNDER EARLIER PHASES
- INDICATES AREAS UNDER CONSTRUCTION IN THIS PHASE
- PCCB — INDICATES TEMPORARY PRECAST CONCRETE BARRIER (10'-0" LENGTHS)
- *PCCB — INDICATES TEMPORARY PRECAST CONCRETE BARRIER (10'-0" LENGTHS) WITH ACCESS FOR EMERGENCY VEHICLES
- INDICATES TEMPORARY SIGN SUPPORT
- INDICATES TEMPORARY BEAM RAIL ON BARRELS

TEMPORARY BARRIER QUANTITIES				
ITEM	DESCRIPTION	NUMBER	UNIT	QUANTITY
622	PCCB (10'-0" LENGTHS)	40	LIN. FT.	400
606	TEMP. BEAM RAIL (12'-6")	6	LIN. FT.	75

NOTES:
QUANTITIES CARRIED TO GENERAL SUMMARY SHEET 17A and 17C.
TEMP. BEAM RAIL & PCCB SHALL BE RE-USED FROM PHASE TO PHASE IF ACCEPTABLE TO THE ENGINEER.

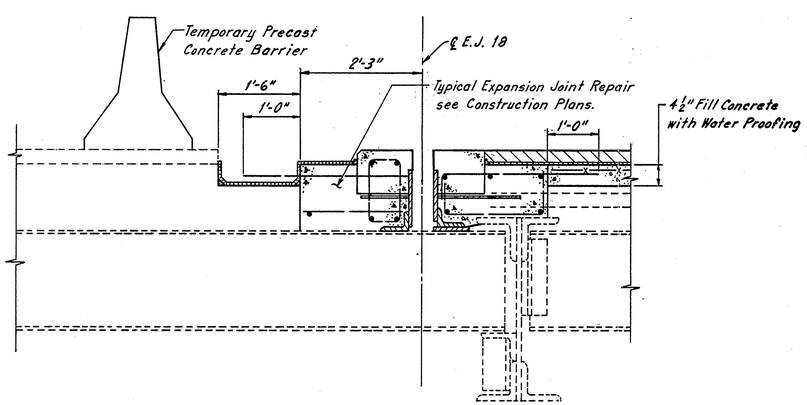

SECTION G-G

NOTES: FOR SECTION E-E SEE SHEET 5.
FOR SECTION F-F SEE SHEET 6.

EUTHENICS INC.
CONSULTING ENGINEERS
CLEVELAND OHIO

REHABILITATION OF TOWER CITY BRIDGES
PROSPECT AVE., HURON ROAD,
WEST 2ND., 3RD. & 6TH. ST. VIADUCTS

MAINTENANCE OF TRAFFIC
PHASE IV CONSTRUCTION

CLEVELAND CUYAHOGA COUNTY OHIO

Mode LRH	Trcd. JSC	Ckd. LJD	Rev. RAB	Scale: No Scale
Date 9-2-82	Date 9-8-82	Date 9-9-82	Date 10-1-82	Sheet 7 / 170

FHWA REGION	STATE	PROJECT	
5	OHIO	M-ID 99 (9)	

8 / 170

CUYAHOGA COUNTY
HURON / PROSPECT BRIDGE

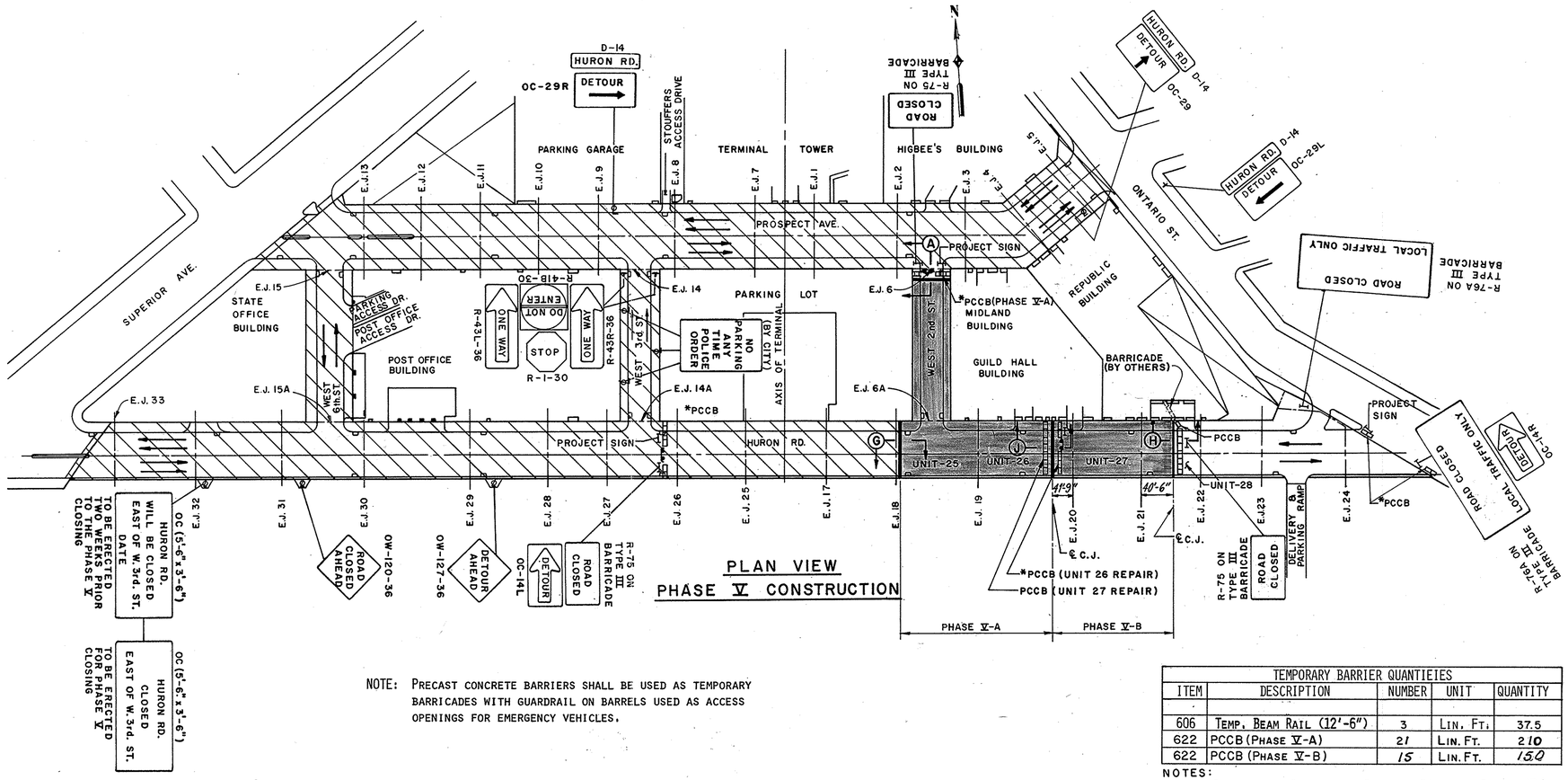

PLAN VIEW
PHASE V CONSTRUCTION

NOTE: PRECAST CONCRETE BARRIERS SHALL BE USED AS TEMPORARY BARRICADES WITH GUARDRAIL ON BARRELS USED AS ACCESS OPENINGS FOR EMERGENCY VEHICLES.

PHASE V CONSTRUCTION

1. PROVIDE PERMANENT SIGNING AND STRIPING IN PHASE IV CONSTRUCTION AREA AS DIRECTED BY THE ENGINEER PRIOR TO REMOVING PHASE IV BARRICADES.
2. THE CONTRACTOR SHALL PROVIDE SEVENTY-TWO (72) HOURS NOTICE TO THE CITY TRAFFIC ENGINEERING DEPARTMENT PRIOR TO CHANGE OVER FROM PHASE IV TO PHASE V.
3. RELOCATE TEMPORARY BARRICADES WHERE SHOWN. PROVIDE WARNING DEVICES AND TEMPORARY SIGNING AS REQUIRED TO DIVERT TRAFFIC AND MAINTAIN LOCAL ACCESS TO ALL AFFECTED PROPERTIES.
4. AFTER PHASE V ROADWAY IS CLOSED TO TRAFFIC THE CITY TRAFFIC ENGINEERING DEPARTMENT WILL REMOVE AND SALVAGE ALL EXISTING PERMANENT SIGNS WITHIN PHASE V CONSTRUCTION AREA.
5. THE CONTRACTOR MUST PROVIDE FIFTEEN(15) DAYS WRITTEN NOTICE TO THE ENGINEER PRIOR TO DOING ANY WORK IN THIS PHASE.
6. RE-OPEN POST OFFICE PARKING RAMPS AND REMOVE TEMPORARY TOLL BOOTH. REPAIR THE PARKING ACCESS DRIVES TO THEIR ORIGINAL CONDITION.
7. PHASE V SHALL BE CONSTRUCTED IN TWO PHASES. ACCESS MUST BE MAINTAINED TO ACCESS POINTS EAST OF CONSTRUCTION JOINT WHILE UNIT 25 AND UNIT 26 ARE REPAIRED. ACCESS MUST BE MAINTAINED TO ACCESS POINTS WEST OF CONSTRUCTION JOINT WHILE PART OF UNIT 26 AND UNIT 27 ARE REPAIRED.
8. REMOVE THE CONSTRUCTION FENCE ALONG THE STATE OFFICE BUILDING PROPERTY AT HURON ROAD.
9. MAINTAIN ONE-WAY TRAFFIC ON WEST 3RD AND TWO-WAY TRAFFIC ON WEST 6TH STREETS.
10. PROCEED WITH REMOVAL AND REPLACEMENT OF THE DECK AND SUPPORTING STEEL WITHIN AREAS SHOWN. FOR LIMITS OF DECK REPAIRS SEE STREET SURFACE PLANS.
11. CONTRACTOR MUST PROVIDE A SYSTEM OF BULKHEADS AND TEMPORARY DRAINAGE TO PREVENT THE FLOW OF WATER INTO THE OPENINGS THRU THE DECK SLAB. SEE GENERAL NOTES SHEET 13.

TEMPORARY BARRIER QUANTIEIES

ITEM	DESCRIPTION	NUMBER	UNIT	QUANTITY
606	TEMP. BEAM RAIL (12'-6")	3	LIN. FT.	37.5
622	PCCB (PHASE V-A)	21	LIN. FT.	210
622	PCCB (PHASE V-B)	15	LIN. FT.	150

NOTES:
QUANTITIES CARRIED TO GENERAL SUMMARY SHEET 17A and 17C.
TEMP. BEAM RAIL & PCCB SHALL BE RE-USED FROM PHASE TO PHASE IF ACCEPTABLE TO THE ENGINEER.

LEGEND

- INDICATES AREAS COMPLETED UNDER EARLIER PHASES
- INDICATES AREAS UNDER CONSTRUCTION IN THIS PHASE
- PCCB — INDICATES TEMPORARY PRECAST CONCRETE BARRIER (10'-0" LENGTHS)
- *PCCB — INDICATES TEMPORARY PRECAST CONCRETE BARRIER (10'-0" LENGTHS) WITH ACCESS FOR EMERGENCY VEHICLES
- INDICATES TEMPORARY SIGN SUPPORT
- INDICATES TEMPORARY BEAM RAIL ON BARRELS
- C.J. — INDICATES CONSTRUCTION JOINT

NOTES:
FOR SECTION A-A SEE SHEET 4.
FOR SECTION G-G SEE SHEET 7.

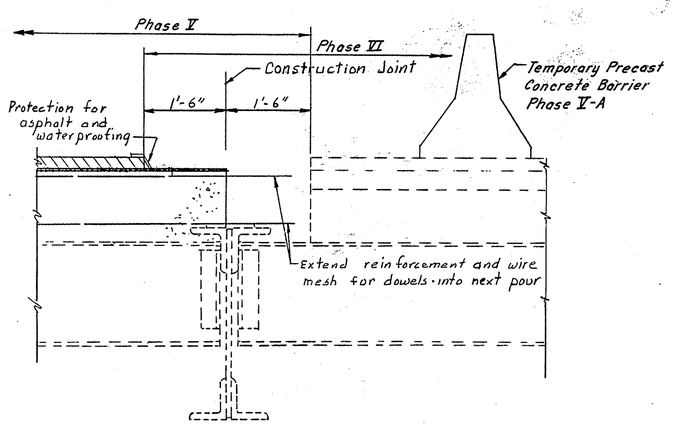

SECTION H-H
(Section shown thru complete deck removal)

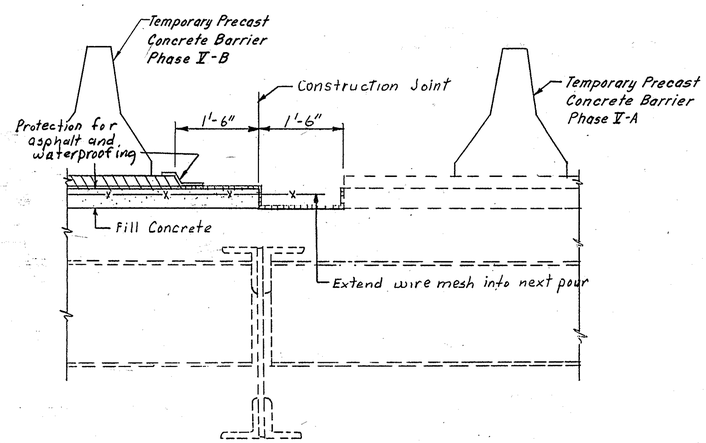

SECTION J-J
(Section thru partial repair area Unit 26 repairs)

EUTHENICS INC.
CONSULTING ENGINEERS
CLEVELAND OHIO

REHABILITATION OF TOWER CITY BRIDGES
PROSPECT AVE., HURON ROAD,
WEST 2ND., 3RD. & 6TH. ST. VIADUCTS

MAINTENANCE OF TRAFFIC
PHASE V CONSTRUCTION

CLEVELAND CUYAHOGA COUNTY OHIO

Made LPH	Trcd. JSC	Ckd. LJD	Rev. RAB	Revised No Scale
Date 9-27-82	Date 10-8-82	Date 10-12-18	Date 10-18-82	Sheet 8 / 170

FHWA REGION	STATE	PROJECT	
5	OHIO	M-ID 99(9)	

CUYAHOGA COUNTY
HURON / PROSPECT BRIDGE

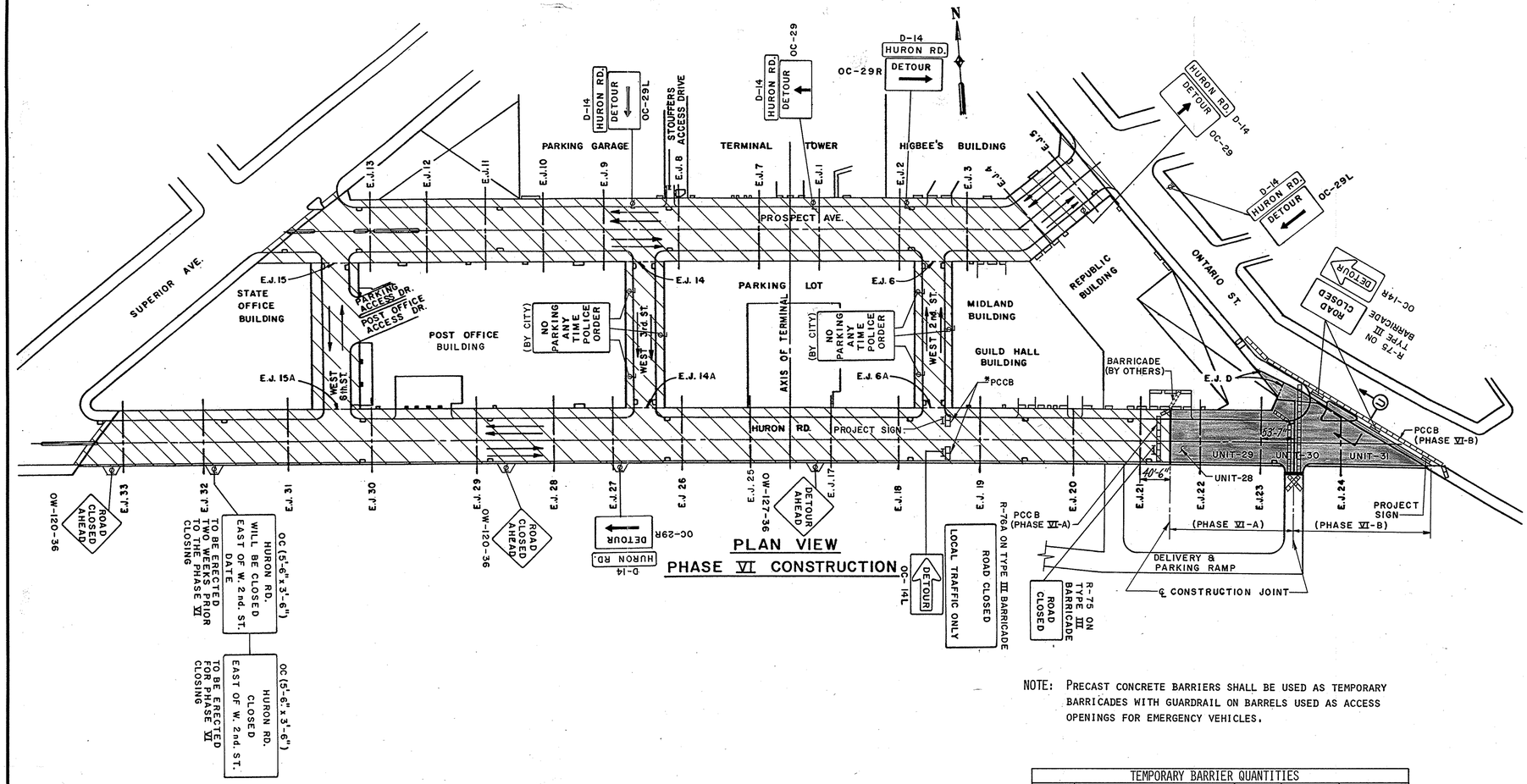

PLAN VIEW
PHASE VI CONSTRUCTION

PHASE VI CONSTRUCTION

1. PROVIDE PERMANENT SIGNING AND STRIPING IN PHASE V CONSTRUCTION AREA AS DIRECTED BY THE ENGINEER PRIOR TO REMOVING PHASE V BARRICADES.
2. THE CONTRACTOR SHALL PROVIDE SEVENTY-TWO (72) HOURS NOTICE TO THE CITY TRAFFIC ENGINEERING DEPARTMENT PRIOR TO CHANGE OVER FROM PHASE V TO PHASE VI.
3. RELOCATE TEMPORARY BARRICADES WHERE SHOWN. PROVIDE WARNING DEVICES AND TEMPORARY SIGNING AS REQUIRED TO DIVERT TRAFFIC AND MAINTAIN LOCAL ACCESS TO ALL AFFECTED PROPERTIES.
4. AFTER PHASE VI ROADWAY IS CLOSED TO TRAFFIC THE CITY TRAFFIC ENGINEERING DEPARTMENT WILL REMOVE AND SALVAGE ALL EXISTING PERMANENT SIGNS WITHIN THE PHASE VI CONSTRUCTION AREA.
5. THE CONTRACTOR MUST PROVIDE FIFTEEN (15) DAYS WRITTEN NOTICE TO THE ENGINEER PRIOR TO DOING ANY WORK IN THIS PHASE.
6. RESTORE WEST 2ND STREET AND WEST 3RD STREET TO ONE WAY AS SHOWN WITH NO PARKING.
7. PROCEED WITH REMOVAL AND REPLACEMENT OF THE DECK AND SUPPORTING STEEL WITHIN AREAS SHOWN. FOR LIMITS OF DECK REPAIRS SEE STREET SURFACE PLANS.
8. CONSTRUCTION PHASE VI SHALL BE CONSTRUCTED IN TWO PHASES. ACCESS TO THE DELIVERY AND PARKING RAMP WITH 11'-0" MINIMUM CLEARANCE MUST BE MAINTAINED AT ALL TIMES.
9. AT COMPLETION OF THE PROJECT THE CONTRACTOR SHALL REMOVE ALL TEMPORARY BARRICADES, CONSTRUCTION FENCES AND SIGNS AND COMPLETE THE FINAL SIGNING AND STRIPING.

NOTE: PRECAST CONCRETE BARRIERS SHALL BE USED AS TEMPORARY BARRICADES WITH GUARDRAIL ON BARRELS USED AS ACCESS OPENINGS FOR EMERGENCY VEHICLES.

TEMPORARY BARRIER QUANTITIES				
ITEM	DESCRIPTION	NUMBER	UNIT	QUANTITY
622	PCCB (PHASE VI-A)	42	LIN. FT.	420
622	PCCB (PHASE VI-B)	52	LIN. FT.	520

NOTES:
QUANTITIES CARRIED TO GENERAL SUMMARY SHEET 17A and 17C.
TEMP. BEAM RAIL & PCCB SHALL BE RE-USED FROM PHASE TO PHASE IF ACCEPTABLE TO THE ENGINEER.

LEGEND
- INDICATES AREAS COMPLETED UNDER EARLIER PHASES
- INDICATES AREAS UNDER CONSTRUCTION IN THIS PHASE
- PCCB — INDICATES TEMPORARY PRECAST CONCRETE BARRIER (10'-0" LENGTHS)
- *PCCB — INDICATES TEMPORARY PRECAST CONCRETE BARRIER (10'-0" LENGTHS) WITH ACCESS FOR EMERGENCY VEHICLES
- INDICATES TEMPORARY SIGN SUPPORT
- INDICATES TEMPORARY BEAM RAIL ON BARRELS

NOTE: FOR SECTION U-U SEE SHEET 33.

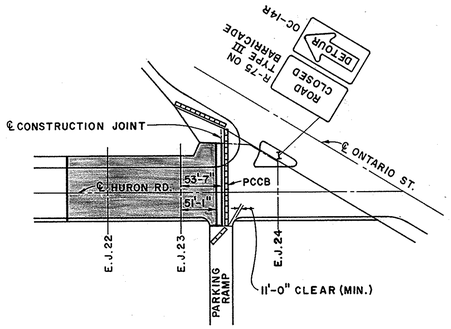

PHASE VI-A

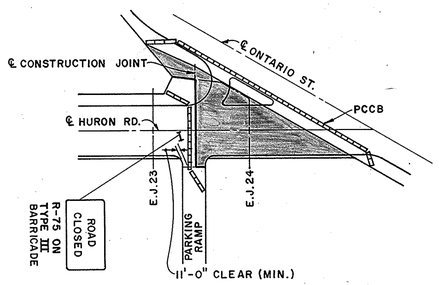

PHASE VI-B

EUTHENICS INC.
CONSULTING ENGINEERS
CLEVELAND OHIO

REHABILITATION OF TOWER CITY BRIDGES
PROSPECT AVE., HURON ROAD,
WEST 2ND., 3RD. & 6TH. ST. VIADUCTS

MAINTENANCE OF TRAFFIC
PHASE VI CONSTRUCTION

CLEVELAND CUYAHOGA COUNTY OHIO

Made JSC	Trcd. JSC	Ckd. LJD	Rev. RAB	Scale: No Scale
Date 9-28-82	Date 10-6-82	Date 10-11-82	Date 10-18-82	Sheet 3 / 170

GENERAL NOTES

FHWA REGION	STATE	PROJECT	
5	OHIO	M-ID 99 (9)	

CUYAHOGA COUNTY
HURON / PROSPECT BRIDGE

EXISTING STRUCTURES

THE EXISTING VIADUCT STRUCTURES ENCOMPASS THE CLEVELAND UNION TERMINAL RAILROAD STATION AND TRACKS. FOR MOST OF THE LENGTH OF THE VIADUCTS THERE ARE INTERMEDIATE LEVELS BELOW THE ROADWAY SURFACE WHICH HOUSE; THE MAIN CONCOURSE TO THE UNION TERMINAL SHOPPING AREAS, PARKING GARAGES, BUSINESS OFFICES AND STORAGE AREAS. IN MOST OF THESE AREAS A DROP TILE CEILING IS HUNG FROM THE MAIN STEEL ROADWAY SUPPORTS TO SEPARATE THE UNDERSIDE OF THE BRIDGE FROM THE SHOPPING AND OFFICE AREAS BELOW. BUILDINGS ABUT THE STRUCTURES FOR MOST OF THE LENGTH EXCEPT ALONG THE SOUTH SIDE OF HURON ROAD. THERE IS A LONGITUDINAL EXPANSION JOINT BETWEEN THE BUILDINGS AND BRIDGE SIDEWALKS.

THE PROSPECT AVENUE VIADUCT IS APPROXIMATELY 1,255 FEET LONG AND RUNS FROM ONTARIO STREET ON THE EAST TO SUPERIOR AVENUE ON THE WEST. THE ROADWAY WIDTH IS 68'-0" BETWEEN FACE OF CURBS AND HAS TWO 16'-0" SIDEWALKS. THE STRUCTURE CONSISTS OF 13 UNITS WITH TRANSVERSE EXPANSION JOINTS BETWEEN UNITS.

THE PROSPECT AVENUE VIADUCT CONSISTS OF FOUR BASIC LEVELS OF OCCUPANCY. THE GROUND LEVEL AT ABOUT ELEVATION 50 IS THE R.T.A. RAPID TRANSIT PLATFORMS AND TRACKS. THE SECOND LEVEL ELEVATION 72.5 IS THE MAIN CONCOURSE OF THE UNION TERMINAL. THE THIRD ELEVATION 85.0 HAS STORAGE ROOMS AND SOME OFFICES. THE TOP LEVEL AT A MAXIMUM ELEVATION OF ABOUT 99 IS THE PROSPECT AVENUE PAVEMENT. THE INTERMEDIATE 72.5 AND 85.0 LEVELS EXTEND FOR ALL BUT ABOUT THE WESTERN 285 FEET OF THE STRUCTURE.

THE ROADWAY SURFACE OF THE VIADUCT CONSISTS OF A MINIMUM OF 3 INCHES OF ASPHALT, 4 INCHES OF CONCRETE FILL, A WATERPROOFING MEMBRANE, AND A 8½ INCH REINFORCED CONCRETE SLAB. THE BOTTOM OF THE DECK SLAB HAUNCHES DOWN AT THE CENTER OF THE BRIDGE WHERE PROVISION WAS MADE FOR FUTURE TROLLEY CARS. IN THIS AREA THE CONCRETE FILL IS 8 INCHES AND THERE IS AN INTERMEDIATE COURSE OF SAND AND ASPHALT OVER THE STRUCTURAL SLAB. THE DECK IS SUPPORTED ON LONGITUDINAL STEEL BEAMS. SOME OF THE BEAMS ARE CONCRETE ENCASED FOR FIREPROOFING PROTECTION.

THE HURON ROAD VIADUCT IS APPROXIMATELY 2,006 FEET LONG AND RUNS FROM ONTARIO STREET ON THE EAST TO SUPERIOR AVENUE ON THE WEST. THE ROADWAY WIDTH IS 68'-0" BETWEEN FACE OF CURBS AND HAS A 16'-0" SIDEWALK ON THE NORTH SIDE AND A 13 INCH CURB, WITH A WOODEN FENCE BEHIND, ON THE SOUTH SIDE. THE FRAMING WAS EXTENDED OUTSIDE THE ROADWAY ON THE SOUTH SIDE FOR A FUTURE SIDEWALK THAT WAS NOT CONSTRUCTED. THE STRUCTURE CONSISTS OF 18 UNITS WITH TRANSVERSE EXPANSION JOINTS BETWEEN UNITS.

THE HURON ROAD VIADUCT CONSISTS OF FOUR BASIC LEVELS OF OCCUPANCY. THE GROUND LEVEL AT ABOUT ELEVATION 50 IS USED PARTLY FOR PARKING. THE SECOND LEVEL ELEVATION 72.5 AND THE THIRD LEVEL ELEVATION 85.0 HAS STORAGE ROOMS AND BUSINESS OFFICES. THE TOP LEVEL AT A MAXIMUM ELEVATION OF ABOUT 99 IS THE HURON ROAD PAVEMENT. THE INTERMEDIATE 72.5 AND 85.0 LEVELS EXTEND FOR ABOUT THE MIDDLE ONE-HALF OF THE STRUCTURE.

THE ROADWAY SURFACE OF THE VIADUCT CONSISTS OF FROM 3-5 INCHES OF ASPHALT, 4 INCHES OF CONCRETE FILL, A WATERPROOFING MEMBRANE, AND A 8½ INCH REINFORCED CONCRETE SLAB. THE BOTTOM OF THE DECK SLAB HAUNCHES DOWN AT THE CENTER OF THE BRIDGE WHERE PROVISION WAS MADE FOR FUTURE TROLLEY CARS. IN THIS AREA THE CONCRETE FILL IS 8 INCHES AND THERE IS AN INTERMEDIATE COURSE OF SAND AND ASPHALT OVER THE STRUCTURAL SLAB. THE DECK IS SUPPORTED ON LONGITUDINAL STEEL BEAMS OR ON TRANSVERSE STEEL FLOOR BEAMS AND LONGITUDINAL STEEL GIRDERS. SOME OF THE BEAMS ARE CONCRETE ENCASED FOR FIREPROOFING PROTECTION.

THE WEST 6TH, 3RD AND 2ND STREET BRIDGES ARE APPROXIMATELY 239 FEET LONG AND RUN BETWEEN PROSPECT AVENUE AND HURON ROAD. THE ROADWAY WIDTH ON WEST 6TH STREET IS 40'-0" BETWEEN FACE OF CURBS AND HAS TWO 14'-6" SIDEWALKS. THE ROADWAY WIDTH ON WEST 3RD AND 2ND STREETS IS 35'-0" BETWEEN FACE OF CURBS AND THERE ARE 11'-6" SIDEWALKS ON BOTH SIDES OF EACH BRIDGE. THERE ARE SLIDING PLATE JOINTS WHERE THESE CROSS STREETS MEET PROSPECT AVENUE AND HURON ROAD.

GROUND ELEVATION UNDER THE BRIDGES IS AT ABOUT ELEVATION 50. THE ROADWAY SURFACE IS AT A MAXIMUM ELEVATION OF ABOUT 87 ON THE WEST 6TH STREET BRIDGE AND AT ELEVATION 98 FOR THE WEST 3RD AND WEST 2ND STREET STRUCTURES. THERE ARE INTERMEDIATE LEVELS AT ELEVATION 72.5 AND 85.0 WHICH ARE USED FOR STORAGE AND OFFICE SPACE, FOR THE ENTIRE LENGTH OF THE WEST 3RD AND 2ND STREET BRIDGES.

THE SURFACE OF THE WEST 6TH STREET VIADUCT CONSISTS OF A MINIMUM OF 3 INCHES OF ASPHALT, 4 INCHES OF CONCRETE FILL, A WATERPROOFING MEMBRANE, AND A 12 INCH REINFORCED CONCRETE SLAB. THE DECK IS SUPPORTED ON TRANSVERSE STEEL FLOOR BEAMS AND LONGITUDINAL STEEL GIRDERS.

THE SURFACE OF THE WEST 3RD AND 2ND STREET VIADUCTS CONSISTS OF A MINIMUM OF 3 INCHES OF ASPHALT, 4 INCHES OF CONCRETE FILL, A WATERPROOFING MEMBRANE, AND A 7½ INCH REINFORCED CONCRETE SLAB. THE BOTTOM OF THE DECK SLAB HAUNCHES DOWN AT THE CENTER OF THE BRIDGE WHERE PROVISION WAS MADE FOR FUTURE TROLLEY CARS. IN THIS AREA THE CONCRETE FILL IS 8 INCHES AND THERE IS AN INTERMEDIATE COURSE OF SAND AND ASPHALT OVER THE STRUCTURAL SLAB. THE DECK IS SUPPORTED ON MULTIPLE LONGITUDINAL STEEL BEAMS. THE BEAMS ON WEST 3RD STREET ARE CONCRETE ENCASED FOR FIREPROOFING PROTECTION.

THE SUBSTRUCTURE FOR ALL THE BRIDGES ARE REINFORCED CONCRETE ABUTMENTS WITH STEEL FRAME PIER BENTS. THERE ARE CONCRETE CRASH WALLS AROUND THE BOTTOM OF SOME OF THE EXPOSED PIERS.

THE STRUCTURAL STEEL FOR THE BRIDGES ARE IN ACCORDANCE WITH THE NEW YORK CENTRAL LINES SPECIFICATIONS FOR STEEL RAILROAD BRIDGES, DATED 1917.

IN ADDITION TO THE RAILWAY LOADING THE BRIDGES ARE DESIGNED FOR THREE 20-TON TRUCKS FOLLOWED AND/OR PROCEEDED BY A UNIFORM LOAD OF 800 POUNDS PER LINEAR FOOT FOR EACH LANE OF TRAFFIC ON THE ROADWAY. THE AXLE LOADS AND UNIFORM LOADS ARE APPLIED AS FOLLOWS:

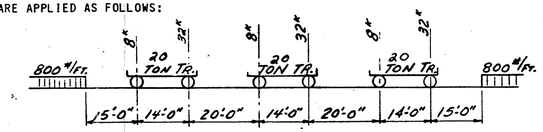

THE EXISTING STRUCTURAL STEEL IS A BILLET STEEL WITH AN ALLOWABLE AXIAL TENSION OF 16,000 PSI. REINFORCED CONCRETE WAS TO HAVE AN AVERAGE COMPRESSIVE STRENGTH OF AT LEAST 2,000 PSI.

COPIES OF THE CONSTRUCTION PLANS FOR THE EXISTING STRUCTURES ARE ON FILE IN THE CITY OF CLEVELAND, CITY HALL, ROOM 518, AND ARE AVAILABLE FOR REFERENCE.

EXISTING STRUCTURE VERIFICATION

DETAILS AND DIMENSIONS SHOWN ON THESE PLANS PERTAINING TO THE EXISTING STRUCTURE HAVE BEEN OBTAINED FROM PLANS OF THE EXISTING STRUCTURE AND/OR FROM FIELD OBSERVATIONS AND MEASUREMENTS. CONSEQUENTLY, THEY ARE INDICATIVE OF THE EXISTING STRUCTURE AND THE PROPOSED WORK BUT THEY SHALL BE CONSIDERED TENTATIVE AND APPROXIMATE. THE CONTRACTOR IS REFERRED TO CMS SECTIONS 102.04, 105.02 AND 513.02.

CONTRACT BID PRICES SHALL BE BASED UPON A RECOGNITION OF THE UNCERTAINTIES DESCRIBED ABOVE AND UPON A PREBID EXAMINATION OF THE EXISTING STRUCTURE BY THE CONTRACTOR. HOWEVER, ALL PROJECT WORK SHALL BE BASED UPON ACTUAL DETAILS AND DIMENSIONS WHICH HAVE BEEN VERIFIED BY THE CONTRACTOR IN THE FIELD.

SCOPE OF WORK

THE WORK TO BE DONE UNDER THIS CONTRACT IS FOR THE REHABILITATION OF THE PROSPECT AVENUE, HURON ROAD, WEST 2ND STREET, WEST 3RD STREET, AND WEST 6TH STREET VIADUCTS BEHIND THE TERMINAL TOWER COMPLEX IN THE CITY OF CLEVELAND. THE PROJECT EXTENDS FROM SUPERIOR AVENUE ON THE WEST TO ONTARIO STREET ON THE EAST.

FOR MOST OF THE LENGTH OF THE VIADUCTS THERE ARE ENCLOSED INTERMEDIATE LEVELS BELOW THE ROADWAY SURFACE, SEPARATED BY A CEILING HUNG FROM THE MAIN STEEL ROADWAY SUPPORTS. IN GENERAL, THE LIMITS OF WORK UNDER THIS PROJECT EXTEND FROM THE ROADWAY SURFACE LEVEL TO THE SUSPENDED CEILING IN THE ENCLOSED AREAS AND FROM THE ROADWAY SURFACE TO GROUND LEVEL OUTSIDE OF THE BUILDING AREAS.

THE WORK TO BE PERFORMED IS AS SHOWN ON THE CONSTRUCTION PLANS AND, IN GENERAL, INCLUDES THE FOLLOWING:

A. REMOVAL AND REPLACEMENT OF ALL TRANSVERSE EXPANSION JOINTS WITH NEW ELASTOMERIC TYPE JOINTS.
B. REMOVAL AND REPLACEMENT OF BRIDGE ROADWAY ASPHALT WEARING SURFACE.
C. REMOVAL AND REPLACEMENT OF BRIDGE ROADWAY FILL CONCRETE BELOW THE ASPHALT WEARING SURFACE.
D. REMOVAL AND REPLACEMENT OF ENTIRE BRIDGE SIDEWALK CONCRETE WEARING SURFACE, MEMBRANE WATERPROOFING AND CURB PLATE.
E. REMOVAL AND REPLACEMENT OF PORTIONS OF STRUCTURAL CONCRETE DECK AND SIDEWALK AS OUTLINED ON THE CONSTRUCTION PLANS.
F. CLEANING, REPAIRING, PAINTING AND REPLACEMENT OF STRUCTURAL STEEL, AS REQUIRED.
G. CLEANING, REPAIRING, PAINTING AND REPLACEMENT OF DRAINAGE SYSTEMS, AS REQUIRED.
H. CONSTRUCTION OF SAFETY CURB, PARAPET AND CHAIN LINK FENCE ON SOUTH SIDE OF HURON ROAD.
I. CONCRETE REPAIRS TO PORTIONS OF THE ABUTMENTS AND DESIGNATED PIER CRASH WALLS AS PER PLAN.
J. MISCELLANEOUS REMOVAL AND REPAIRS TO SPLICING CHAMBERS AND HYDRANT PITS FOR PUBLIC UTILITIES; GUARDRAILS; WOODEN AND METAL FENCES; ETC.
K. REPLACEMENT, AS REQUIRED, OF VARIOUS PUBLIC UTILITY LINES, AND PROVISION FOR REPLACEMENT OF PRIVATE UTILITY LINES, WITHIN OR SUPPORTED OFF THE STRUCTURE.
L. REMOVAL AND REPLACEMENT OF EXISTING BUILDING LINE EXPANSION JOINTS.
M. CONSTRUCTION OF A PARAPET AND FENCE ON NW SIDE OF PROSPECT AVENUE AND NE SIDE OF HURON ROAD.

CONTINGENCY QUANTITIES

THE CONTRACTOR SHALL NOT ORDER MATERIALS OR PERFORM WORK FOR PLAN ITEMS SET UP TO BE USED "AS DIRECTED BY THE ENGINEER" UNLESS AUTHORIZED BY THE ENGINEER. THE ACTUAL WORK LOCATIONS AND QUANTITIES USED AT THE ENGINEER'S DISCRETION SHALL BE MADE A MATTER OF RECORD BY INCORPORATION INTO THE FINAL CHANGE ORDER GOVERNING COMPLETION OF THIS PROJECT.

DESIGN SPECIFICATIONS

"STANDARD SPECIFICATIONS FOR HIGHWAY BRIDGES" ADOPTED BY THE AMERICAN ASSOCIATION OF STATE HIGHWAY OFFICIALS, 1977 INCLUDING THE 1978, 1979, 1980 AND 1981 INTERIM SPECIFICATIONS AND THE "OHIO SUPPLEMENT" TO THESE SPECIFICATIONS.

THE DESIGN LOADING FOR THE NEW SLAB CONSTRUCTION IS HS-20-44 CASE I AND THE ALTERNATE MILITARY LOADING.

THE CLASSES OF CONCRETE AND THE GRADES OF STRUCTURAL STEEL AND REINFORCING STEEL, TOGETHER WITH THE STRENGTH FOR EACH ARE AS FOLLOWS:

CONCRETE, CLASS S - COMPRESSIVE STRENGTH, 4,500 PSI FOR SUPERSTRUCTURE
CONCRETE, CLASS C - UNIT STRESS 1,333 PSI FOR SUBSTRUCTURE
STRUCTURAL STEEL - ASTM A36 - UNIT STRESS 20,000 PSI
REINFORCING STEEL - ASTM A615, A616, A617 - GRADE 60, MIMIMUM YIELD STRENGTH 60,000 PSI.

REFERENCE DRAWINGS

REFERENCE SHALL BE MADE TO THE STANDARD DRAWINGS LISTED ON THE TITLE SHEET.

SUPPLEMENTAL SPECIFICATIONS

REFERENCE SHALL BE MADE TO THE SUPPLEMENTAL SPECIFICATIONS LISTED ON THE TITLE SHEET.

DIMENSIONS

DIMENSIONS GIVEN ARE MEASURED HORIZONTALLY AND AT 60°F. UNLESS OTHERWISE NOTED. DIMENSIONS GIVEN FOR EXISTING STRUCTURES ARE FROM THE ORIGINAL CONSTRUCTION PLANS. SOME VARIATION FROM PLAN DIMENSIONS IS EXPECTED. ANY ADDITIONAL COST RESULTING FROM VARIATION IN PLAN DIMENSIONS IS THE RESPONSIBILITY OF THE CONTRACTOR AND NO ADDITIONAL PAYMENT WILL BE AWARDED BY THE STATE.

WATER SUPPLY

THE CONTRACTOR MAY OBTAIN WATER FROM THE CITY WATER SUPPLY BY OBTAINING THE NECESSARY FIRE HYDRANT PERMIT FROM THE DEPARTMENT OF PUBLIC UTILITIES AND SHALL PAY ALL CHARGES FOR THE SERVICE. NO IMPROPER, WASTEFUL OR UNDUE USE OF WATER WILL BE PERMITTED.

CARE OF EXISTING STRUCTURES AND UTILITIES

ALL EXISTING BUILDINGS, BUILDING FACING, PLATE GLASS WINDOWS, METAL TRIM, AWNINGS, CANOPIES, FIRE STANDPIPES, ROADWAY SURFACES, RAMPS, PAVEMENTS CURBS, SIDEWALKS, PARKING AREAS, FENCES, PARKING METERS, MAILBOXES, SIGNS, SIGNAL POLES, LIGHT POLES, FIRE HYDRANTS, MANHOLES, MANHOLE COVERS, SEWERS, DRAINS, GAS LINES WATER LINES, STEAM LINES, UTILITIES, RTA FACILITIES INCLUDING TRACK, ROAD BED, ELECTRICAL SUPPLY LINES, FIXTURES AND SIGNALS, REMOVED OR DAMAGED DURING THE COURSE OF THE WORK SHALL BE REPLACED BY THE CONTRACTOR. ALL SUCH PRIVATELY AND PUBLICLY OWNED ITEMS SHALL BE REPLACED IN THE SAME MANNER AND OF EQUAL QUALITY AND DIMENSIONS AS EXISTED BEFORE THE COMMENCEMENT OF THE WORK IN ACCORDANCE WITH THE OWNER'S REQUIREMENTS. ALL SUCH REPLACEMENTS SHALL BE PERFORMED AS SOON AS PRACTICABLE.

THE INFORMATION SHOWN ON THE CONTRACT DRAWINGS CONCERNING TYPE AND LOCATION OF UTILITIES IS NOT GUARANTEED TO BE ACCURATE OR ALL INCLUSIVE. THE CONTRACTOR IS RESPONSIBLE FOR MAKING HIS OWN DETERMINATION AS TO THE TYPE AND LOCATION OF UTILITIES AS MAY BE NECESSARY TO AVOID DAMAGE THERETO.

CERTAIN EXISTING PRIVATELY OWNED UTILITY FACILITIES ON THE SITE OF THE WORK WHICH WILL INTERFERE WITH THE FINAL CONSTRUCTION SHALL BE SUPPORTED, REMOVED OR RELOCATED BY THE OWNER OF THE UTILITY, AS NOTED ON THE PLANS AND IN THESE SPECIFICATIONS. ANY EXPENSES IN SO DOING SHALL BE BORNE BY THE UTILITY.

THE CONTRACTOR SHALL EXERCISE EXTREME CARE WHEN REMOVING CONCRETE AND WORKING AROUND UTILITIES WHICH ARE TO REMAIN IN SERVICE AT THE EXISTING LOCATION DURING CONSTRUCTION. THE UTILITIES MUST BE PROTECTED AGAINST DAMAGE OR DISRUPTION. THE FULL COST FOR PROTECTION OF THESE UTILITIES, THAT ARE TO REMAIN IN PLACE, SHALL BE THE RESPONSIBILITY OF THE CONTRACTOR. NO SEPARATE PAYMENT WILL BE MADE FOR THIS WORK, THE COST OF WHICH SHALL HAVE BEEN INCLUDED IN OTHER ITEMS OF WORK.

THE FOLLOWING IS A LIST OF THE UTILITIES AND THE NAME AND ADDRESS OF THE OWNER:

WATER:
MR WILLIAM J. SWEENEY
DEPARTMENT OF PUBLIC UTILITIES
DIVISION OF WATER AND HEAT
1201 LAKESIDE AVENUE
CLEVELAND, OHIO 44114
PHONE NO.: 644-3349

ELECTRIC:
MR. T.C. REIDY
MUNICIPAL ELECTRIC LIGHT & POWER
1201 LAKESIDE AVENUE
DIVISION OF LIGHT & POWER
ROOM 322
CLEVELAND, OHIO 44114
PHONE NO.: 644-2776

ELECTRIC:
MR. R.H. HOHERTZ
CLEVELAND ELECTRIC ILLUMINATING COMPANY
P. O. BOX 5000 - ROOM 477
CLEVELAND, OHIO 44101
PHONE NO.: 622-9800

TELEPHONE:
MR. JAMES NAHORY
OHIO BELL TELEPHONE COMPANY
820 SUPERIOR AVENUE, N.W.
ROOM 215
CLEVELAND, OHIO 44113
PHONE NO.: 822-2310

TELEGRAPH:
MR. K.C. DORSEY
WESTERN UNION TELEGRAPH COMPANY
427 SOUTH LASALLE STREET
CHICAGO, ILLINOIS 60605
PHONE NO.: (312) 435-1872

GAS:
MR. RICHARD GENDER
EAST OHIO GAS COMPANY
1201 EAST 55TH STREET
CLEVELAND, OHIO 44103
PHONE NO.: 361-2753

CONTRACT DRAWINGS

THE PLANS WERE DRAWN ON SHEETS 21" x 33½" INSIDE THE BORDER LINES. THE CONTRACTOR IS WARNED THAT IF THE PLANS HAVE BEEN REDUCED THE SCALES LISTED ON THE PLANS MUST BE ADJUSTED ACCORDINGLY.

EMERGENCY USE OF CONTRACTORS HEAVY EQUIPMENT

THE CONTRACTOR SHALL AGREE TO MAKE HIS HEAVY EQUIPMENT AVAILABLE TO THE PRORERTY OWNERS IN CASE OF EMERGENCY.

THE CONTRACTOR SHALL BE COMPENSATED FOR HIS EQUIPMENT ON A TIME AND MATERIALS BASIS TO BE NEGOTIATED WITH THE PROPERTY OWNER WHEN AND IF THE NEED ARISES.

PASSAGE WAYS

Access between work areas shall be restricted to those areas shown on sheets 157, and 164 thru 167.

EUTHENICS INC.
CONSULTING ENGINEERS
CLEVELAND OHIO

REHABILITATION OF TOWER CITY BRIDGES
PROSPECT AVE., HURON ROAD,
WEST 2ND., 3RD. & 6TH. ST. VIADUCTS

GENERAL NOTES

CLEVELAND CUYAHOGA COUNTY OHIO

Made LJD	Trcd. TJ	Ckd. LJD	Rev. RAB	Scale:
Date 8-2-82	Date 9-20-82	Date 10-14-82	Date 10-24-82	Sheet 10/170

GENERAL NOTES

FHWA REGION	STATE	PROJECT	
5	OHIO	M-ID 99(9)	

CUYAHOGA COUNTY
HURON / PROSPECT BRIDGE

CO-OPERATION WITH UTILITIES

The Contractor is hereby notified that his work shall be so scheduled and performed as to provide a minimum of interference with any and all utility services. Continuous services will be maintained at the same level during construction as existing prior to the construction.

If because of construction operation it is necessary to interrupt such utility service, a designated representative of the Owner of the Utility involved shall be advised, in writing, not less than 48 hours in advance of such proposed interruption. Work of this type shall be scheduled to be performed during periods of minimum demand, day or night, on the utility involved and within the time limit established by the Owner's representative. Periods of shutdown longer than those established as the maximum by the Owner of the utility involved will not be permitted. If such shutdowns occur, the Contractor will be considered liable for any resulting damages.

WORK IN AND AROUND M.E.L.P. FACILITIES:

Repair and replacement of M.E.L.P. facilities are shown on the Plans and will be performed under this Contract. See Sheets 114 thru 123 for Details.

WORK IN AND AROUND OHIO BELL TELEPHONE FACILITIES:

In the south sidewalk of Prospect Avenue, are two banks of 16 Ohio Bell Telephone Company ducts. These ducts carry various size telephone cable and a co-axial cable that must be kept in service at all times. Periods of shut down cannot be permitted and all construction work in and around this facility shall be performed with extreme care and under the supervision of the OBT Field Engineer.

During the Phase I Construction period Expansion Joints 1 thru 5 and Expansion Joint 6 at West 2nd Street are to be replaced. Phase II construction consists of replacing Expansion Joints 7, 8 and 9 on Prospect Avenue and Expansion Joint 14 on West 3rd Street. Phase III Construction includes complete removal of all the concrete in the deck and sidewalk in Units 1, 2 and 3 and partial removal in Units 4 and 5.

During the Phase I Construction period the OBT Contractor shall remove and replace the concrete roof of the OBT manhole adjacent to Expansion Joint 3. During the Phase II Construction period the OBT Contractor shall remove and replace the concrete roof of the OBT manhole adjacent to Expansion Joint 9. The General Contractor shall remove and replace the waterproofing and sidewalk wearing surface over these manholes.

Expansion Joints 1 thru 5 and 7 thru 9 will require complete removal of the existing sidewalk. The Bridge Contractor shall remove the sidewalk wearing surface. The OBT Contractor shall then remove and dispose of the concrete from around the two banks of 16 ducts, provide temporary support and protection of the existing cable. The remaining sidewalk shall then be removed by the Bridge Contractor. Limits of removal are shown on the OBT Plans but may need to be extended. Upon completion of removal the OBT Contractor shall place new split duct formation around the existing cable to match the existing duct. The OBT expansion joints shall be placed after the expansion joint end plates for the sidewalk are placed. Before any concrete for the new sidewalk is placed, all exposed joints of the split duct shall be covered with duct tape or other acceptable covering to avoid concrete getting inside the duct formation.

In Phase III where all the concrete roadway and sidewalk will be removed in Units 1, 2 and 3, a special system for temporarily supporting the existing cables has been designed and is shown in the attached OBT Plans. The Contractor shall construct the temporary cable support system and remove the four inch wearing surface on the sidewalk. The OBT Contractor shall then remove the existing concrete around the conduit and remove the conduit if it cannot be salvaged and install the temporary hangers to carry the conduit or the cables. The Contractor shall then remove all remaining concrete and erect the forms for the new concrete. The OBT Contractor shall install new ducts as required and support them from the forms. Special care shall be taken by the OBT Contractor to prevent any leakage of new concrete into the ducts and to prevent them from floating up when the new concrete is placed. The Contractor shall then remove the temporary cable support system and pour the new concrete.

WORK IN AND AROUND CLEVELAND ELECTRIC ILLUMINATING COMPANY FACILITIES:

General Specifications

After the removal of the sidewalk wearing course by the Contractor, if it appears to be necessary to remove the concrete from around the conduit system, this work shall be done by the Cleveland Electric Illuminating Company, hereafter designated CEI Co. Any replacement and/or repairs to the conduit system shall be done by CEI Co. After the concrete has been removed, CEI Co. shall be responsible for supporting their conduit system during construction of new work. It shall be the responsibility of the general contractor to provide adequate protection around the conduit system by methods acceptable and approved by CEI Co. Reference to work to be done by CEI Co. will also apply to CEI Co. Contractor.

CEI Co. will not pay any sum of money for the normal protection of the conduit system or for any delays caused by necessary repairs and/or replacement of conduits. Any special protective devices or supports requested by CEI Co. shall be provided by the Contractor by separate agreement with CEI Co. Any work considered by CEI Co. to be in excess of normal protective measures will be at the expense of CEI Co.

The Contractor shall be held liable to the Cleveland Electric Illuminating Company for any damage to the conduit system and/or cables within, either from the lack of proper protection or as a direct result of his action.

Huron Road Viaduct

CEI Co. has a 20-duct conduit system including manholes in the north sidewalk of Huron Road viaduct from Ontario Street to Superior Avenue. In this conduit system are three 15,000 volt cables that supply the Ress Realty, Tower City Properties and the U.S. Post Office.

The Contractor is to notify the CEI Co. (622-9800 - Ext. 3579) 48 hours in advance of any sidewalk removal on the north side of Huron Road viaduct between Ontario Street and Superior Avenue. CEI Co. will have an inspector on the job site during all work in or around the 20-duct conduit system. The risk and expense of proceeding with this work without a CEI Co. representative shall rest with the Contractor.

Prospect Avenue Viaduct

CEI Co. has two separate conduit systems including manholes located in the north sidewalk of Prospect Avenue viaduct from Ontario Street to Superior Avenue. The north system has 20 ducts and the south system has 16 ducts. Between Units 9, 10, 11, 12 and 13, which is part of the first phase of rehabilitation, CEI Co. has one 600 volt service circuit that supplies the parking lot located between West 2nd and West 3rd Streets and bounded by the south side of Prospect Avenue and north side of Huron Road. The Contractor is to notify the CEI Co. (622-9800 - Ext. 3579) 48 hours in advance of any sidewalk removal on the north side of Prospect Avenue viaduct between Ontario Street and Superior avenue. CEI Co. will have an inspector on the job site during all work in or around the 20-duct and 16-duct conduit systems. The risk and expense of proceeding with this work without a CEI Co. representative shall rest with the Contractor.

CO-OPERATION BETWEEN CONTRACTORS

The Contractor, under this Contract, shall arrange his work and shall place and remove materials being used so as not to interfere with the operations of other contractors within the limits of this project or on adjacent projects.

Within certain limits on this project contractors for Ohio Bell Telephone Company and Cleveland Electric Illuminating Company will remove concrete from around the utility ducts and relocate ducts where indicated on the Plans or called for in these Specifications.

At all times the Contractor herein shall so schedule his activities and co-ordinate hiw work with that of the Contractors listed above, or others which may be involved, so as not to interfere with or cause claim for damage on their work. No separate payment will be provided for this item, the cost of which shall have been included in other items of work.

EASEMENTS AND WORK AGREEMENTS

An aerial easement to construct the safety curb and parapet on the south side of Huron Road; and work agreements to provide access to work on or below the structure from private property shall be negotiated between the City of Cleveland and the property owner.

The Contractor shall confine his operations to the boundaries set forth in the agreements and shown on the Plans. He shall perform his operations in a manner prescribed in these agreements and restore disturbed private areas to the conditions existing before work under this Contract began.

The Contractor is cautioned to familiarize himself with the contents of all the easements and work agreements on the project. Copies of the agreements are on file at the Office of the City Engineer, City of Cleveland, and are available for viewing.

The entire cost of any special easement or work agreement requirements shall be included in the prices bid for other items of work and no additional payment will be allowed therefore.

CO-OPERATION BETWEEN CONTRACTOR AND PROPERTY OWNERS

Complete co-operation between the Contractor and the adjoining property owners is essential. The owners shall designate an authorized representative to act on their behalf in all matters relating to the performance of work on this project. The names, phone numbers and availability of the representatives shall be supplied by the owners to the Contractor.

REMOVAL

A. General

The removal of items under this Contract shall conform to O.D.O.T. Specification Item No. 202, and to the modifications and additions thereto, noted herein. The Contractor shall remove the designated portions of the existing structures to the limits shown on the Plans or as directed by the Engineer, except for those items specifically designated for removal by others. The following parts of the structure are to be removed by the Contractor:

1. Asphaltic and concrete sidewalk wearing surface and waterproofing fill concrete.
2. Portions of concrete deck slab including items embedded therein.
3. Portions of concrete abutments and crash walls as per plan.
4. Portions of structural steel framing.
5. Portions of drainage system above ground.
6. Fence and guardrail.
7. Light poles and portions of utility ducts and sewers embedded within or supported from the structure.

Existing traffic signs, signal and parking meter heads shall be removed by the City Traffic Engineering Department. The Contractor shall remove the existing parking meter and sign supports.

When removing and replacing expansion joints or full depth structural deck repairs over occupied areas or over parking lot areas the Contractor is limited to working on no more than two (2) expansion joints and the unit between them at any one time. This will set the limits of the area below to be protected from falling debris to the length of no more than two adjacent transverse expansion joints plus twenty feet (20') at each end.

The Contractor shall provide all necessary temporary supports under portions of the structure, during removal and reconstruction operations, as required to maintain a completely stable structure at all times. If, in the opinion of the Engineer, additional supports are required, they shall be provided by the Contractor entirely at his expense. The Contractor shall submit plans of temporary supports together with his proposed method and sequence of removal to the Engineer for approval.

The Contractor shall provide all temporary platforms or other means necessary to permit access for inspection.

All areas under the deck must be protected from falling debris. The Contractor shall not permit the concrete, steel or other items removed to drop onto the ceiling of the lower levels, over the R.T.A. tracks or onto any other areas where damage may result from the falling debris. Means shall be provided for catching broken concrete, steel and other materials removed. The Contractor shall submit details of the method he proposes to use to collect these materials to the Engineer for approval. The materials so collected shall be removed promptly and not allowed to accumulate.

Extrema care must be exercised by the Contractor not to damage or break any windows, doors, face of building walls, columns, canopies or any fixtures attached to the buildings. Any damage will be repaired at the Contractor's expense to the satisfaction of the property owner and Engineer.

Extreme care must be taken while working around or near fire hydrants, water lines and valves. The fire hydrants, water lines and valves shall be supported during construction and if damaged, provisions shall be made to provide for fire protection as required during repairs.

B. Concrete Deck Removal

A careful detailed visual inspection of the underside of all concrete deck slabs has been made. Based on this inspection, certain areas on the Plans are identified for replacement, and other areas are designated to be repaired by patching, as required after the waterproofing fill concrete is removed.

The removal in areas designated for replacement shall be paid for at the unit price bid for Item 202 - Concrete Portions of Superstructure Removed. Removal in the areas designated for patching shall be paid for at the unit price bid for Item Special - Patching Existing Concrete Deck Slabs Less Than 1 Inch Deep, Partial Depth or Full Depth. Removal of the sidewalk wearing course and roadway waterproof fill concrete shall be paid for at the unit price bid for the appropriate bid Item.

In addition to the areas marked on the Plans for removal, areas designated for patching, both roadway and sidewalk, shall be carefully inspected by the Engineer, Consultant and the Contractor's superintendent or approved representative after the fill concrete and sidewalk wearing course are removed, exposing the structural deck. This inspection shall include the underside of the structural deck as well as the surface.

The Contractor shall provide the necessary scaffolding or other equipment for the Engineer and Consultant, accompanied by the Contractor, to inspect the underside and sound the deck and outline the limits of the areas to be patched.

Based upon these additional inspections the Engineer will determine the limits of removal. The Contractor shall cut out and remove all concrete as directed by the Engineer, and shall provide whatever is necessary in the way of platforms or staging to facilitate additional inspection as concrete is cut out. The Consultant shall prepare additional Shop Drawings for such parts as may be necessary.

Payment for additional concrete removed shall be included under the appropriate bid item for patching existing concrete deck slabs. No separate payment will be made to the Contractor to cover any costs of the inspection as described herein to include equipment and personnel. The cost for this work shall be included in the contract price bid for other items of work.

When so directed by the Engineer, the Contractor shall wet down concrete thoroughly during removal operations to prevent the spread of dust. The water and necessary connections shall be furnished by the Contractor and included for payment with the removal.

C. Structural Steel Removal

A careful, detailed, visual inspection has been made of all of the structural steel members. Based on this inspection, Plans have been prepared for members or parts of members which will require removal.

The Contractor shall provide necessary equipment prior to beginning of work for the purpose of examining the existing structure. The Contractor's Superintendent or other approved representative shall accompany the Engineer and Consultant in making a detailed examination of the repairs to be made. The Equipment shall be furnished for whatever length of time may be necessary to conduct this examination. No separate payment will be made to the Contractor to cover any costs of this inspection, including equipment and personnel. The cost for this work shall be included in the contract price bid for other items of work. The Plans show the members scheduled for removal and/or repair as a result of the original detailed inspection. Based upon the additional inspections and conditions which will be disclosed as the work progresses, the Engineer may designate additional members or parts of members to be removed.

In such cases, additional Plans will be prepared by the Consultant to show details of the removal and replacement. The quantity of additional steel removed shall be paid for at the unit price bid for Item 202 - Structural Steel Portions of Structure Removed.

Structural steel shall be removed by methods selected by the Contractor and as approved by the Engineer. Care shall be exercised to prevent damage to members which are to be reused.

D. Disposal of Removed Materials

All concrete, asphalt, reinforcing steel, structural metal, pipe, utility fixtures, fence, etc., cut or removed from the structure and not reused shall, unless otherwise specified, become the property of the Contractor and shall be removed by him from the site.

Under no circumstances shall material be permitted to remain on the premises, right-of-way, streets, suspended ceilings, etc., unless approved by the Engineer.

EUTHENICS INC.
CONSULTING ENGINEERS
CLEVELAND OHIO

REHABILITATION OF TOWER CITY BRIDGES
PROSPECT AVE., HURON ROAD,
WEST 2ND., 3RD. & 6TH. ST. VIADUCTS

GENERAL NOTES

CLEVELAND	CUYAHOGA COUNTY	OHIO
Mode LJD Date 8-3-82	Trcd. TJ Date 9-20-82	Ckd. LJD Date 10-14-82
Rev. RAB Date 10-24-82	Scale:	Sheet 11 / 170

GENERAL NOTES

FHWA REGION	STATE	PROJECT	
5	OHIO	M-ID 99 (9)	

12
170

CUYAHOGA COUNTY
HURON / PROSPECT BRIDGE

WORK OVER AND ADJACENT TO R.T.A. RAPID TRANSIT TRACKS

METHODS AND PROCEDURES FOR PERFORMING WORK ON THE G.C.R.T.A. PROPERTY MUST BE APPROVED BY WILLARD C. PISTLER, GREATER CLEVELAND REGIONAL TRANSIT AUTHORITY, 615 SUPERIOR AVENUE, N.W. CLEVELAND, OHIO 44113.

THE CONTRACTOR SHALL BE RESPONSIBLE FOR ANY DAMAGE TO THE G.C.R.T.A. TRACKS, TRAINS, ELECTRICAL SUPPLY,SIGNALS, ROADBED, PEDESTRIAN LOADING DOCKS, OR ANY OTHER G.C.R.T.A. EQUIPMENT. ANY SUCH DAMAGE SHALL BE REPAIRED IN THE SAME MANNER AND OF EQUAL QUALITY AND DIMENSIONS AS EXISTED BEFORE THE START OF THE WORK IN ACCORDANCE WITH G.C.R.T.A.'S REQUIREMENTS, AS SOON AS PRACTICAL.

THE FULL COST TO PROTECT, REPLACE, MOVE OR REPAIR ALL DAMAGE DONE TO ANY SAID FACILITIES AND THE COST OF ANY FLAGMEN OR WATCHMEN REQUIRED BY G.C.R.T.A. SHALL BE INCLUDED IN THE LUMP SUM OR UNIT PRICES BID FOR OTHER ITEMS OF WORK AND NO ADDITIONAL COMPENSATION WILL BE ALLOWED THEREFORE. BEFORE FINAL PAYMENT IS MADE, THE CONTRACTOR SHALL SUBMIT SATISFACTORY EVIDENCE THAT HE HAS PAID G.C.R.T.A. FOR PROTECTION SERVICES AND DEVICES FURNISHED. THE ENGINEER SHALL KEEP A RECORD OF WHEN FLAGGING IS FURNISHED ON THE PROJECT AND THE NUMBER OF PERSONS INVOLVED. IN THE EVENT OF CONTROVERSY AS TO THE NECESSITY FOR ANY PROTECTION CHARGES RENDERED BY G.C.R.T.A. AGAINST THE CONTRACTOR, THE DECISION OF THE DIRECTOR SHALL BE FINAL.

AUDIO-VIDEO TAPING

A. AUDIO-VIDEO TAPING SHALL CONSIST OF COLOR VIDEO TAPING OF THE STREET LEVEL TAKEN ALONG THE ENTIRE PROJECT INCLUDING FACE OF BUILDINGS, DRIVES, DOORWAYS AND ALL STREET FEATURES. THE BELOW DECK ACCESS WAYS THE CONTRACTOR WILL USE TO GET TO AND FROM THE JOB SHALL BE VIDEO-TAPED SO THE EXISTING CONDITION OF THE FLOOR, WALLS AND CEILING CAN BE RECORDED. IN ALL LOCATIONS BELOW WHERE THE TOTAL STRUCTURAL DECK IS REMOVED COLOR VIDEO-TAPING SHALL BE TAKEN OF THE CEILING AREA. THIS DOES NOT PERTAIN TO THE CRAWL SPACES ABOVE THE CEILINGS.

B. THE PURPOSE OF THE COLOR AUDIO-VIDEO TAPING OF THE PROJECT IS TO PROVIDE THE NECESSARY INFORMATION OF THE EXISTING CONDITIONS PRIOR TO CONSTRUCTION IN CASE ANY DAMAGE CLAIMS BY THE PROPERTY OWNERS ARE LODGED. THIS TAPING WILL ASSIST IN REPLACING AREAS DAMAGED BY CONSTRUCTION TO THEIR ORIGINAL CONDITION.

C. QUALIFICATIONS - COLOR AUDIO-VIDEO TAPING MUST BE COMPILED BY A PROFESSIONAL ELECTROGRAPHER ACTIVELY ENGAGED IN COLOR AUDIO-VIDEO TAPE RECORDINGS OF SIMILAR TYPE PROJECTS FOR MUNICIPAL AGENCIES. THE NAME OF THE COMPANY MUST BE SUBMITTED TO THE ENGINEER FOR APPROVAL PRIOR TO ENGAGING IN THE WORK.

D. COVERAGE OF TAPING - SUCH COVERAGE SHALL INCLUDE BUT NOT BE LIMITED TO, ALL EXISTING DRIVEWAYS, SIDEWALKS, CURBS, STREETS, CATCH BASINS, LIGHTS, FENCES, VISIBLE UTILITIES, AND ALL BUILDINGS LOCATED WITHIN THE ZONE OF INFLUENCE AT STREET LEVEL. BELOW THE DECK COVERAGE SHALL INCLUDE ALL STAIRWAYS, WALLS, CEILINGS AND PHYSICAL FEATURES WITHIN THE AGREED UPON BOUNDARIES. TAPING AT TRACK LEVEL WILL ONLY BE REQUIRED WHERE DRAINAGE PIPES DROP DOWN. AUDIO DESCRIPTION SHALL BE MADE SIMULTANEOUSLY WITH AND SUPPORT THE VIDEO COVERAGE.

E. ELECTRONIC REQUIREMENTS - AUDIO-VIDEO TAPE SHALL BE SONY KCA-60, MEMOREX UCA-60 OR EQUAL, AND MUST BE INTERCHANGEABLE WITH A 3/4 INCH COLOR VIDEO CASSETTE PLAYER/RECORDER, EIAJ STANDARD NTSC COLOR SIGNAL. VIDEO OUTPUT FROM CAMERA(S) USED MUST BE CAPABLE OF PRODUCING NTSC-525 LINES/60 FIELD(S).

RESOLUTION IN THE Y CHANNEL, MINIMUM 500 TV LINES AT CENTER, UTILIZING A BIAS LIT BEAM SPLIT PRISM, IN COMBINATION WITH PLUMBICON PICK-UP TUBES, FOR OPTIMUM COLOR IMAGERY AND MINIMUM LAG THROUGH TEN (10) FOOT CANDLES, WITH GEOMETRIC DISTORTION NOT TO EXCEED 1.5% OF PICTURE HEIGHT AT ANY POINT IN PICTURE AREA.

F. LOCATION INFORMATION - ALL TAPES (CASSETTES AND CASES) SHALL BE PROPERLY IDENTIFIED BY TAPE NUMBER, LOCATION AND PROJECT NAME IN A MANNER ACCEPTABLE TO THE ENGINEER.

A RECORD OF THE CONTENTS OF EACH TAPE SHALL BE SUPPLIED ON A RUN SHEET IDENTIFYING EACH SEGMENT IN THE TAPE BY LOCATION, I.E., STREET OR STATION, VIEWING SIDE, TRAVELING DIRECTION AND ALL REFERENCED BY TAPE COUNTER NUMBERS.

A BRIEF REPORT AND INVENTORY OF ALL TAPES COMPLETED, REFERENCED BY LOCATION AND TAPE NUMBER, SHALL BE FURNISHED TO THE ENGINEER UPON COMPLETION OF THE WORK AND DELIVERY OF THE TAPES.

ALL VIDEO RECORDINGS SHALL BEGIN WITH THE DATE AND TIME OF RECORDING, THE PROJECT NAME, THE SHEET NUMBERS OR ENGINEERING STATIONING AS SHOWN ON THE PLANS, THE NAME OF THE STREET, BUILDINGS BEING TAPED, THE DIRECTION OF TRAVEL, AND THE VIEWING SIDE.

THE ENGINEERING STATIONING NUMBERS MUST BE CONTINUOUS AND CORRESPOND TO THE PROJECT STATIONING AND INCLUDE THE STANDARD ENGINEERING SYMBOLS (FOR EXAMPLE: 37+38). THIS INFORMATION MUST APPEAR IN THE LOWER HALF OF THE VIEWING SCREEN. BELOW THE ENGINEERING STATIONING SHALL APPEAR THE NAME OF THE PROJECT, NAME OF THE AREA COVERED, DIRECTION OF TRAVEL, VIEWING SIDE, ETC.

ALL TAPES ARE TO BE ACCOMPANIED BY A NOTARIZED STATEMENT VERIFYING THE ORIGINAL UNEDITED QUALITY OF THE TAPES.

G. ENTERING PROPERTY - WHEN IT BECOMES NECESSARY TO ENTER ONTO PRIVATE PROPERTY, NOTIFY THE OWNER OF SUCH PROPERTY AT LEAST 24 HOURS IN ADVANCE OF THE PLANNED ENTRY TO OBTAIN HIS PERMISSION TO DO SO. SHOULD THE OWNER OF THE PROPERTY REFUSE TO GIVE HIS PERMISSION FOR SAID ENTRY NOTIFY THE ENGINEER.

THE CONTRACTOR IS ADVISED THAT HE SHALL NOT ENTER ANY PRIVATE PROPERTY BEFORE PERMISSION IS GRANTED TO DO SO OR THE ENGINEER NOTIFIES THE CONTRACTOR THAT HE HAS GAINED THE LEGAL RIGHT TO DO SO. THE CONTRACTOR SHALL BE HELD LIABLE FOR ENTRY MADE OTHER THAN STATED ABOVE.

H. OWNERSHIP OF TAPES - ALL TAPES PRODUCED WILL BECOME THE PERMANENT PROPERTY OF THE ENGINEER. THE CONTRACTOR SHALL DELIVERY ALL TAPES TO THE ENGINEER PRIOR TO THE BEGINNING OF ANY CONSTRUCTION WORK.

ANY PORTION OF THE TAPE COVERAGE DEEMED UNACCEPTABLE BY THE ENGINEER MUST BE RETAPED BY THE CONTRACTOR AT NO ADDITIONAL CHARGE.

I. SITE RECORDING CONDITIONS - ALL TAPING SHALL BE DONE DURING TIMES OF GOOD VISIBILITY. NO OUTSIDE TAPING SHALL BE DONE DURING PERIODS OF VISIBLE PRECIPITATION OR WHEN THE GROUND AREA IS COVERED WITH SNOW, UNLESS OTHERWISE AUTHORIZED BY THE ENGINEER.

IN ORDER TO PRODUCE THE PROPER DETAIL AND PERSPECTIVE, ADEQUATE AUXILIARY LIGHTING WILL BE REQUIRED TO FILL IN SHADOW AREAS CAUSED BY BUILDINGS, UTILITY POLES, ROAD SIGNS AND OTHER SUCH OBJECTS, AS WELL AS OTHER CONDITIONS REQUIRING ARTIFICIAL ILLUMINATION.

THE AVERAGE RATE OF SPEED IN THE GENERAL DIRECTION OF TRAVEL OF THE CONVEYANCE USED DURING TAPING SHALL NOT EXCEED 48 FEET PER MINUTE. PANNING RATES AND ZOOM-IN ZOOM-OUT RATES SHALL BE CONTROLLED SUFFICIENTLY SUCH THAT PLAYBACK WILL PRODUCE ADEQUATE CLARITY OF THE OBJECTS BEING VIEWED.

WHEN CONVENTIONAL WHEELED VEHICLES ARE USED AS CONVEYANCES FOR THE TAPING, THE DISTANCE FROM THE CAMERA LENS TO THE GROUND SHALL NOT BE LESS THAN EIGHT (8') FEET TO INSURE PROPER PERSPECTIVE. IN INSTANCES WHERE TAPE COVERAGE WILL BE REQUIRED IN AREAS NOT ACCESSIBLE TO CONVENTIONAL WHEELED VEHICLES, SUCH COVERAGE SHALL BE OBTAINED BY WALKING OR BY SPECIAL CONVEYANCE APPROVED BY THE ENGINEER, BUT WITH THE SAME REQUIREMENTS FOR TAPE QUALITY AND CONTENT AS SPECIFIED HEREIN EXCEPT AS MAY BE SPECIFICALLY EXEMPTED BY THE ENGINEER.

J. PAYMENT - THE FULL COST OF FURNISHING ALL LABOR, MATERIAL AND EQUIPMENT TO PERFORM THE REQUIRED AUDIO-VIDEO TAPING AS DESCRIBED HEREIN SHALL BE PAID FOR UNDER BID ITEM SPECIAL - AUDIO-VIDEO TAPING.

EUTHENICS INC.
CONSULTING ENGINEERS
CLEVELAND OHIO

REHABILITATION OF TOWER CITY BRIDGES
PROSPECT AVE., HURON ROAD,
WEST 2ND., 3RD. & 6TH. ST. VIADUCTS

GENERAL NOTES

CLEVELAND CUYAHOGA COUNTY OHIO

Made LJD	Trcd. TJ	Ckd. LJD	Rev. RAB	Revised
Date 8-3-82	Date 9-20-82	Date 10-14-82	Date 10-24-82	Sheet 12 / 170

GENERAL NOTES

FHWA REGION	STATE	PROJECT	
5	OHIO	M-ID 99(9)	

CUYAHOGA COUNTY
HURON / PROSPECT BRIDGE

ITEM 624 - MOBILIZATION, AS PER PLAN

THE CONTRACTOR SHALL PROVIDE A SUITABLE FIELD OFFICE HAVING A MINIMUM OF 800 SQ. FT. OF FLOOR SPACE WHICH SHALL BE IN ACCORDANCE WITH 619.01 AND 619.02. PAYMENT FOR THE ABOVE SHALL BE INCLUDED IN THE LUMP SUM PRICE BID FOR ITEM 624 - MOBILIZATION, AS PER PLAN.

ITEM 623 - CONSTRUCTION *LAYOUT STAKES*, AS PER PLAN

THIS ITEM SHALL CONFORM TO ITEM 623 - CONSTRUCTION LAYOUT STAKES AND TO THE MODIFICATIONS AND ADDITIONS AS NOTED HEREIN.

ALL HORIZONTAL AND VERTICAL CONTROL WORK REQUIRED FOR THE COMPLETE LAYOUT AND PERFORMANCE OF THE WORK UNDER THIS CONTRACT SHALL BE DONE BY THE CONTRACTOR AT THE CONTRACTOR'S EXPENSE. THE CONTRACTOR SHALL SET CONSTRUCTION STAKES AND BENCHMARKS AS HE DEEMS NECESSARY TO ESTABLISH LINES AND GRADES FOR THE PROJECT, AND SHALL LOCATE AND REFERENCE THE CENTERLINE OF ALL ROADWAYS.

THE ELEVATIONS SHOWN ON THE PLANS ARE FROM THE ORIGINAL DRAWINGS, AND ARE SHOWN FOR GENERAL REFERENCE ONLY. THE CONTRACTOR WILL BE RESPONSIBLE FOR OBTAINING EXISTING TOP OF SIDEWALK ELEVATIONS AT THE CURB LINE AND 12 INCHES FROM THE BUILDING LINE PRIOR TO THE REMOVAL OF THE SIDEWALK WEARING SURFACE. ELEVATIONS AT THESE POINTS SHALL BE OBTAINED AT EXPANSION JOINTS, FACE OF ABUTMENTS, TWENTY FIVE FEET (25') MAXIMUM INTERVALS BETWEEN EXPANSION JOINTS, POINTS OF DISCONTINUITY, AND ALL OTHER LOCATIONS THE CONTRACTOR DEEMS NECESSARY TO COMPLETELY ESTABLISH THE ELEVATIONS AND SLOPES EXISTING PRIOR TO CONSTRUCTION. ELEVATIONS SHALL BE TAKEN AT ALL ENTRANCE WAYS TO BUILDINGS 12 INCHES INSIDE THE DOORWAYS.

UPON COMPLETION, THE CONTRACTOR SHALL SUBMIT THE ELEVATIONS TO THE CONSULTANT. THE CONSULTANT WILL REVIEW THE SIDEWALK AND DOORWAY ELEVATIONS AND MAKE ANY MINOR ADJUSTMENTS TO INSURE A SMOOTH PAVEMENT PROFILE. BASED ON THESE ELEVATIONS THE CONSULTANT WILL PREPARE, FOR THE CONTRACTOR, A DRAWING SHOWING PROPOSED FINAL PAVEMENT ELEVATIONS TO BE USED FOR THE RECONSTRUCTION OF THE SLAB.

IN ADDITION TO THE SIDEWALK AND DOORWAY ELEVATIONS THE CONTRACTOR SHALL LOCATE AND IDENTIFY ALL UTILITIES, CURBED MEDIANS, TRAFFIC ISLANDS, FENCES, PARKING METERS, ETC., WHICH APPEAR AT STREET LEVEL, BY STATION AND OFFSET FROM CENTERLINE OF ROADWAY. THIS INFORMATION SHOULD BE SUBMITTED TO THE ENGINEER AND CONSULTANT PRIOR TO ANY BRIDGE DECK REMOVAL AND REPAIR.

THE FULL COST OF PERFORMING AND FURNISHING THE HORIZONTAL AND VERTICAL CONTROL WORK FOR THIS PROJECT, AS HEREIN DESCRIBED, SHALL BE INCLUDED IN THE LUMP SUM PRICE BID FOR ITEM 623 - CONSTRUCTION *LAYOUT STAKES*, AS PER PLAN.

ITEM 614 - MAINTENANCE OF TRAFFIC

THE CONTRACTOR'S ATTENTION IS DIRECTED TO THE MAINTENANCE OF TRAFFIC, CONSTRUCTION PHASES I THRU VI, PLAN SHEETS 4 THRU 9 IN THE CONTRACT DRAWINGS.

MAINTENANCE OF TRAFFIC SHALL BE IN ACCORDANCE WITH ITEM 614 AND THE REQUIREMENTS NOTED HEREIN.

BEFORE STARTING ANY WORK UNDER THIS CONTRACT, THE CONTRACTOR SHALL GIVE MR. CLYDE SCOTT, CITY OF CLEVELAND, DIVISION OF TRAFFIC ENGINEERS AND PARKING, 72-HOUR NOTICE PRIOR TO CLOSING ANY EXISTING TRAFFIC LANES AND A 48-HOUR NOTICE PRIOR TO MAKING ANY CHANGES IN THE TRAFFIC FLOW DURING CONSTRUCTION.

THROUGH TRAFFIC FLOW MUST BE MAINTAINED AT ALL TIMES BETWEEN ONTARIO STREET AND SUPERIOR AVENUE AND SAFE INGRESS AND EGRESS SHALL BE PROVIDED FOR VEHICLES AND PEDESTRAINS TO ALL PROPERTY ADJACENT TO THE CONSTRUCTION, AS INDICATED ON THE CONSTRUCTION PHASING PLANS.

WHERE OPENINGS ARE MADE IN THE DECK OR SIDEWALK THE CONTRACTOR SHALL, AT HIS OWN EXPENSE, FURNISH SUCH BARRICADES, FENCES, LIGHTS AND DANGER SIGNALS, SHALL PROVIDE SUCH WATCHMEN, AND SHALL TAKE SUCH OTHER PRECAUTIONARY MEASURES AS ARE NECESSARY FOR THE PROTECTION OF PERSONS OR PROPERTY.

TRAFFIC CONTROL SIGNS AND DETOUR SIGNS WITHIN THE PROJECT AREA SHALL BE FURNISHED, INSTALLED AND MAINTAINED BY THE CONTRACTOR. DETOUR SIGNS OUTSIDE THE PROJECT AREA SHALL BE FURNISHED BY THE CONTRACTOR, INSTALLED, MAINTAINED AND REMOVED BY THE CITY OF CLEVELAND TRAFFIC ENGINEERING DEPARTMENT AND RETURNED TO THE CONTRACTOR.

FOR ADDITIONAL MAINTENANCE OF TRAFFIC NOTES AND PAYMENT SEE SHEET 3A.

ITEM SPECIAL - TRAFFIC SIGN AND PARKING METER SUPPORTS REMOVED

EXISTING SIGNS AND TRAFFIC CONTROL DEVICES WITHIN THE WORK LIMITS SHALL REMAIN IN USE DURING THE CONSTRUCTION PERIOD.

THE WORK SHALL CONSIST OF THE REMOVAL OF EXISTING GROUND MOUNTED SIGN SUPPORTS AND PARKING METER SUPPORTS, AS SHOWN ON THE PLANS.

THE CITY TRAFFIC ENGINEERING DEPARTMENT SHALL REMOVE ALL EXISTING SIGNS FOR SALVAGE AND PARKING METER HEADS FOR STORAGE AND RE-USE.

THE CONTRACTOR SHALL REMOVE THE PARKING METER AND SIGN SUPPORTS AND DELIVER THEM TO THE CITY FOR SALVAGE.

THE CONTRACTOR SHALL ERECT THE NEW SIGN SUPPORTS AND SIGNS AS PER PLANS OR AS DIRECTED BY THE ENGINEER. THE CITY TRAFFIC ENGINEERING DEPARTMENT SHALL REPLACE THE PARKING METER SUPPORTS AND HEADS.

UNDER NO CIRCUMSTANCES WILL THE CONTRACTOR BE PERMITTED TO REMOVE ANY OF THE EQUIPMENT MENTIONED HEREIN WITHOUT FIRST NOTIFYING THE NECESSARY AUTHORITIES.

THE EXISTING TRAFFIC SIGNAL, SUPPORTS AND CONTROLLER WILL BE REMOVED BY THE CITY OF CLEVELAND PRIOR TO THE START OF THE WORK.

THE LUMP SUM PRICE BID FOR THIS ITEM SHALL INCLUDE THE FULL COST OF REMOVING AND DELIVERY TO THE CITY THE PARKING METER SUPPORTS AND TRAFFIC SIGN SUPPORTS, AND THE FURNISHING OF ALL LABOR, MATERIALS, TOOLS AND EQUIPMENT NECESSARY TO COMPLETE THE WORK, AS SPECIFIED ON THE PLANS OR ORDERED BY THE ENGINEER.

ITEM SPECIAL - SECURITY DURING CONSTRUCTION

ANY TIME THE DECK IS OPENED DURING CONSTRUCTION OPERATIONS, THE CONTRACTOR SHALL PROVIDE SECURITY AGAINST ANYONE ENTERING THE BUSINESS AREAS BELOW THRU THE OPENING. DURING NON-WORKING HOURS THE OPENING MUST BE ADEQUATELY SEALED OR SECURITY GUARDS PROVIDED TO PREVENT ACCESS TO THESE AREAS. THE ENGINEER RESERVES THE RIGHT TO REQUIRE THE USE OF A SECURITY GUARD BY THE CONTRACTOR.

THE CONTRACTOR SHALL CO-OPERATE AND CO-ORDINATE HIS SECURITY EFFORTS WITH THAT OF THE ADJACENT PROPERTY OWNERS. THE CONTRACTOR SHALL BE RESPONSIBLE FOR ANY DAMAGE OR LOSS RESULTING FROM HIS LACK OF PROPER SECURITY MEASURES.

PAYMENT FOR SECURITY GUARD OR GUARDS, IF REQUIRED, SHALL BE AT THE CONTRACT PRICE BID PER HOUR FOR ITEM SPECIAL - SECURITY DURING CONSTRUCTION.

ITEM SPECIAL - INTERIM DRAINAGE

THE CONTRACTOR SHALL, AT ALL TIMES DURING CONSTRUCTION, PROVIDE AND MAINTAIN AMPLE MEANS AND DEVICES TO PREVENT ANY WATER FROM ENTERING INTO THE INHABITATED AREAS UNDER THE STRUCTURE.

THE CONTRACTOR SHALL CONSTRUCT A SYSTEM OF TEMPORARY BULKHEADS, COLLECTORS AND DRAINS AT THE UPGRADE SIDE OF ALL EXPANSION JOINTS AND AT OTHER OPENINGS IN THE DECK SLAB TO PREVENT WATER FROM ENTERING THE ENCLOSED AREAS THROUGH THE OPENINGS CUT IN THE DECK SLAB. THE WATER COLLECTED SHALL OUTLET INTO A NORMAL CLOSED DRAINAGE SYSTEM AND WILL NOT BE ALLOWED TO FALL FREE OR ACCUMULATE ON THE FLOOR OR CEILING BELOW.

DURING REMOVAL AND REPLACEMENT OPERATIONS OVER THE ENCLOSED AREAS THE CONTRACTOR MUST PROVIDE A COVERING OR OTHER PROTECTION OF SOME TYPE OVER THE SLAB OPENINGS TO PREVENT THE ENTRANCE OF RAIN OR SNOW. THE CONTRACTOR SHALL NOT OPEN MORE OF THE DECK SLAB AT ANY TIME THAN HE CAN SATISFACTORILY COVER AND PROTECT FROM THE WEATHER. THE CONTRACTOR IS LIMITED TO WORKING ON A MAXIMUM OF TWO (2) TRANSVERSE EXPANSION JOINTS AT ANY ONE TIME.

THE TEMPORARY DRAINAGE SYSTEM AND PROTECTIVE COVERING MUST REMAIN IN PLACE UNTIL THE DECK IS REPLACED AND THE EXPANSION JOINT IS CONSTRUCTED SO AS TO EFFECTIVELY SEAL THE AREAS BELOW FROM THE ENTRANCE OF MOISTURE.

THE CONTRACTOR IS ADVISED TO EXERCISE EXTREME CARE WHEN WORKING OVER THE OAK ROOM BELOW WEST 2ND STREET AT PROSPECT AVENUE. THE WALLS AND CEILING ARE MADE OF IRREPLACEABLE VALUABLE MATERIALS. THE CEILING ART WORK IS ALL HAND PAINTED. EXTRA EFFORTS SHALL BE TAKEN TO PREVENT ANY WATER, DEBRIS OR MATERIALS FROM ENTERING THE OPENINGS IN THE DECK TO MINIMIZE THE POSSIBILITY OF DAMAGE TO THE ROOM BELOW.

THE CONTRACTOR SHALL SUBMIT TO THE ENGINEER FOR APPROVAL HIS PROPOSED PLAN FOR INTERIM DRAINAGE AND HIS SPECIAL PROTECTION PLAN FOR WORK OVER THE OAK ROOM UNDER WEST 2ND STREET.

THE CONTRACTOR SHALL BE HELD RESPONSIBLE FOR ANY DAMAGE DONE DUE TO WATER ENTERING THE OPEN DECK DURING CONSTRUCTION. HE SHALL REPAIR OR HAVE REPAIRED, AT HIS OWN EXPENSE, ANY SUCH DAMAGE TO THE SATISFACTION OF THE PROPERTY OWNER AS SOON AS PRACTICAL.

THE LUMP SUM PRICE BID FOR ITEM SPECIAL - INTERIM DRAINAGE, SHALL INCLUDE THE COST OF INSTALLING, MAINTAINING AND REMOVING THE ENTIRE DRAINAGE SYSTEM INCLUDING ALL MATERIALS, EQUIPMENT, TOOLS, DEVICES AND ALL LABOR NECESSARY TO COMPLETELY SEAL OFF THE ENCLOSED AREAS FROM THE ENTRANCE OF WATER DURING THE CONSTRUCTION PERIOD.

ITEM 202 - CONCRETE PORTIONS OF SUPERSTRUCTURE REMOVED

REMOVAL SHALL CONFORM TO THE REMOVAL NOTE OF THESE GENERAL NOTES AND ITEM 202 WITH THE FOLLOWING MODIFICATIONS AND ADDITIONS:

LIMITS OF REMOVAL TO BE PAID FOR UNDER THIS ITEM ARE SHOWN ON THE PLANS AND INCLUDE THE FOLLOWING: FULL DEPTH STRUCTURAL DECK REMOVAL AS NOTED ON THE PLANS; REMOVAL OF CONCRETE VAULTS AND UTILITY CHAMBERS SUPPORTED OFF THE DECK SLAB AS NOTED ON THE PLANS OR AS REQUIRED; REMOVAL OF CONCRETE FIREPROOFING ENCASEMENT AROUND STRUCTURAL STEEL MEMBERS, AS NOTED ON THE PLANS OR AS REQUIRED; REMOVAL OF BRICK FACING ON FACIA BEAM ON SOUTH SIDE OF HURON ROAD; AND THE REMOVAL OF ALL MISCELLANEOUS CONCRETE NOT INCLUDED ELSEWHERE FOR PAYMENT.

PRIOR TO THE START OF ANY CONCRETE DECK REMOVAL THE LATERAL LIMITS OF EACH AREA SHALL BE SUITABLY MARKED BY THE CONTRACTOR FOR APPROVAL BY THE ENGINEER. CONCRETE SHALL BE REMOVED BY MEANS OF APPROVED PNEUMATIC HAMMERS EMPLOYING POINTED AND BLUNT CHISEL EDGED TOOLS. PAVEMENT BREAKERS WILL NOT BE PERMITTED. THE OUTLINE OF THE AREAS OF THE DECK SLAB TO BE REMOVED SHALL BE CUT TO A DEPTH OF THREE QUARTERS (3/4) OF AN INCH WITH AN APPROVED POWER SAW PRIOR TO THE USE OF PNEUMATIC HAMMERS.

EXISTING REINFORCING STEEL SHALL NOT BE CUT FLUSH, BUT SHALL EXTEND A MINIMUM OF 30 BAR DIAMETERS BEYOND THE LIMITS OF CONCRETE REMOVAL TO SERVE AS DOWELS FOR THE REBUILT SLAB. CONCRETE SHALL BE CHIPPED AWAY FROM THE BAR AND THE BAR SANDBLASTED, IF REQUIRED.

DAMAGED AREAS OF REINFORCEMENT THAT ARE TO REMAIN SHALL BE CUT AND STRESS TRANSFER ACCOMPLISHED BY EITHER WELDING OR A MECHANICAL SPLICE. OTHER EXISTING REINFORCEMENT WITHIN THE REMOVAL LIMITS SHALL BE REMOVED AND DISPOSED OF.

CARE SHALL BE USED IN WORKING AROUND REINFORCING STEEL SO AS NOT TO LOOSEN OR DAMAGE THE STEEL, OR TO SHATTER THE CONCRETE AROUND IT, BEYOND THE REPAIR AREA. CARE SHALL ALSO BE TAKEN SO AS NOT TO DAMAGE THE TOP FLANGE OF THE STRUCTURAL STEEL MEMBERS DURING REMOVAL OPERATIONS.

PNEUMATIC HAMMERS SHALL NOT BE PLACED IN DIRECT CONTACT WITH THE BARS TO REMAIN OR WITH STRUCTURAL STEEL, HAND TOOLS SHALL BE EMPLOYED FOR FINAL CLEANING.

WHEN REMOVING THE STRUCTURAL DECK CONCRETE OVER HIGBEES' STORE AREA IN PROSPECT AVENUE, EJ 3 TO EJ 5, THE CONTRACTOR SHALL BE ADVISED THAT THE FIRE SPRINKLER SYSTEM AND THE HUNG PLASTER CEILING IS SUSPENDED FROM HANGERS EMBEDDED IN THE STRUCTURAL DECK. EXTREME CARE SHALL BE EXERCISED TO KEEP THE SPRINKLER SYSTEM IN SERVICE AND TO MAINTAIN AND MINIMIZE DAMAGE TO THE CEILING.

SEVERAL AREAS IN HURON ROAD HAVE PLASTER CEILINGS SUSPENDED FROM HANGERS EMBEDDED IN THE STRUCTURAL DECK. EXTREME CARE IN REMOVING THE STRUCTURAL DECK CONCRETE SHALL BE EXERCISED TO MAINTAIN THE INTEGRITY AND MINIMIZE DAMAGE TO THE CEILING.

THE CONTRACTOR IS ADVISED OF THE FOLLOWING AREAS HAVING SUSPENDED PLASTER CEILINGS BELOW THE STRUCTURAL DECK IN HURON ROAD:

1. FROM THE BUILDING LINE EAST OF EJ 30 TO EJ 26.
2. EJ 17 TO EAST OF EJ 19.

REMOVAL OF BRICK FACING ON FACIA BEAM ON SOUTH SIDE OF HURON ROAD SHALL BE DONE DURING PHASE I-A CONSTRUCTION. SEE SHEET 54.

CONCRETE OR BRICK FACING REMOVAL, AS SPECIFIED, WILL BE PAID FOR AT THE UNIT PRICE BID PER CUBIC YARD FOR THE ACTUAL QUANTITY REMOVED AS DETERMINED BY THE ENGINEER FROM FIELD MEASUREMENTS. THE CONCRETE REMOVAL REQUIRED FOR THE SIDEWALK WEARING COURSE, ROADWAY FILL CONCRETE AND IN PATCHING EXISTING CONCRETE DECK SLABS IS NOT INCLUDED UNDER THIS ITEM FOR PAYMENT BUT IS INCLUDED IN OTHER ITEMS.

THE UNIT PRICE BID FOR THIS ITEM SHALL INCLUDE THE COST OF REMOVING AND THE DISPOSAL OF ALL REINFORCING STEEL, MISCELLANEOUS STRUCTURAL STEEL MEMBERS, INCLUDING END DAM FRAMING FOR LONGITUDINAL AND TRANSVERSE EXPANSION JOINTS, PIPES, UTILITY DUCTS AND SUPPORTS, AND ANY OTHER MATERIAL EMBEDDED WITHIN OR ATTACHED DIRECTLY TO THE STRUCTURAL DECK, ENCOUNTERED WITHIN THE LIMITS OF REMOVAL AS STATED HEREIN.

ITEM 202 - SIDEWALK WEARING COURSE AND ROADWAY FILL CONCRETE REMOVED

REMOVAL SHALL CONFORM TO THE REMOVAL NOTE OF THESE GENERAL NOTES AND ITEM 202 WITH THE FOLLOWING MODIFICATIONS AND ADDITIONS:

THE WORK UNDER THIS ITEM SHALL INCLUDE THE REMOVAL OF THE CONCRETE SIDEWALK WEARING COURSE TO INCLUDE THE STEEL CURB PLATE AND BUILDING LINE EXPANSION JOINT STEEL, AND THE ROADWAY WATERPROOFING FILL CONCRETE, WITH THICKNESSES AS SHOWN ON THE PLANS, OVER THE ENTIRE LIMITS OF THE PROJECT. THE EXISTING PLANS INDICATE THE FILL CONCRETE TO BE A 1:2:4 OR 1:2½:5 MIX.

THE REMOVAL OF THE SAND, ASPHALT AND CORK BELOW THE FILL CONCRETE IN THE TROLLEY TROUGH AREAS SHALL BE INCLUDED IN THE UNIT PRICE BID FOR THIS ITEM. NO SEPARATE PAYMENT WILL BE MADE FOR THE REMOVAL OF THESE MATERIALS.

THE UNIT PRICE BID PER CUBIC YARD FOR THIS ITEM SHALL INCLUDE THE COST OF REMOVING AND THE DISPOSAL OF THE WIRE FABRIC AND STRUCTURAL STEEL MEMBERS INCLUDING THE CURB PLATES AND ANCHORS WITHIN THE SIDEWALK WEARING COURSE AND FILL CONCRETE. PAYMENT SHALL ALSO INCLUDE THE REMOVAL OF EXISTING WATERPROOFING BY SANDBLASTING OR WHATEVER METHODS NECESSARY.

ITEM 202 - WEARING COURSE REMOVED

REMOVAL SHALL CONFORM TO THE REMOVAL NOTE OF THESE GENERAL NOTES AND ITEM 202 WITH THE FOLLOWING MODIFICATIONS AND ADDITIONS:

THE EXISITNG ASPHALT WEARING SURFACE SHALL BE COMPLETELY REMOVED AND DISPOSED OF.

PAYMENT SHALL BE MADE AT THE UNIT PRICE BID PER SQUARE YARD FOR WHATEVER THICKNESS IS ENCOUNTERED. VARIATIONS IN THE THICKNESS OF THE ASPHALT FROM THAT SHOWN ON THE PLANS SHALL NOT BE CAUSE FOR ADDITIONAL COMPENSATION.

ITEM 202 - PIPE REMOVED

REMOVAL SHALL CONFORM TO THE REMOVAL NOTE OF THESE GENERAL NOTES AND ITEM 202 WITH THE FOLLOWING MODIFICATIONS AND ADDITIONS:

A DETAILED VISUAL INSPECTION OF THE DRAINAGE SYSTEM PIPING HAS BEEN MADE AND THE LIMITS AND APPROXIMATE LENGTH OF PIPE TO BE REMOVED ARE INDICATED ON THE PLANS.

THE LUMP SUM PRICE BID FOR THIS ITEM SHALL INCLUDE FULL PAYMENT FOR THE REMOVAL AND DISPOSAL OF PIPE, INCLUDING SUPPORTS, OF WHATEVER SIZE ENCOUNTERED, AS SHOWN ON THE PLANS OR AS DIRECTED BY THE ENGINEER.

PAYMENT UNDER THIS ITEM IS INTENDED TO INCLUDE PIPE WHICH IS BEING REMOVED AND NOT REPLACED. PAYMENT FOR THE REMOVAL OF PIPE BEING REPLACED SHALL BE INCLUDED IN THE UNIT PRICE BID FOR THE NEW PIPE.

ITEM 202 - FENCE REMOVED FOR REUSE

REMOVAL SHALL CONFORM TO ITEM 202 WITH THE FOLLOWING MODIFICATIONS AND ADDITIONS:

1. THE FENCE ON THE NORTH SIDE OF PROSPECT AVENUE EAST OF EXPANSION JOINT NO. 8 IS WOOD ON STEEL ANGLE POSTS AND CLIP ANGLES BOLTED TO THE STRUCTURE. THE WOODEN FENCE IS TO BE REMOVED AND STORED FOR REUSE IF ACCEPTABLE TO THE ENGINEER. THE STEEL ANGLE POSTS SHALL BE REMOVED OR REMAIN IN PLACE TO BE SANDBLASTED, PAINTED AND REUSED, AS DIRECTED BY THE ENGINEER. SANDBLASTING AND PAINTING SHALL BE PAID FOR UNDER ITEM 607 - FENCE REBUILT.
2. THE FENCE AROUND THE PARKING LOT BETWEEN WEST 2ND AND WEST 3RD STREETS IS A WOVEN WIRE FABRIC FENCE SUPPORTED ON STEEL ANGLE POSTS AND CLIP ANGLES BOLTED TO THE STRUCTURE.
   THE FENCE WIRE FABRIC SHALL BE REMOVED AND STORED FOR REUSE. THE STEEL ANGLE SUPPORT SYSTEM SHALL BE REMOVED AS REQUIRED TO PERMIT THE NEW CONSTRUCTION. ANY PORTION OF THE SUPPORT SYSTEM IN NEED OF REPAIR, REPLACEMENT OR MODIFICATION SHALL BE REMOVED UNDER THIS ITEM AND REPAIRED, REPLACED OR MODIFIED UNDER ITEM 607 -FENCE REBUILT.
3. THE UNIT PRICE BID FOR THIS ITEM SHALL INCLUDE THE FULL COST OF REMOVING THE FENCE INCLUDING SUPPORTS AND STORING AS DIRECTED BY THE ENGINEER AND SHALL INCLUDE THE FURNISHING OF ALL LABOR, MATERIALS, TOOLS AND EQUIPMENT NECESSARY TO COMPLETE THE WORK AS SPECIFIED ON THE PLANS OR DIRECTED BY THE ENGINEER.

EUTHENICS INC.
CONSULTING ENGINEERS
CLEVELAND OHIO

REHABILITATION OF TOWER CITY BRIDGES
PROSPECT AVE., HURON ROAD,
WEST 2ND., 3RD. & 6TH. ST. VIADUCTS

GENERAL NOTES

CLEVELAND CUYAHOGA COUNTY OHIO

Made LJD	Trcd. TJ	Ckd. LJD	Rev. RAB	Revised
Date 8-4-82	Date 9-20-82	Date 10-14-82	Date 10-24-82	Sheet 13/170

GENERAL NOTES

ITEM 202 - STRUCTURAL STEEL PORTIONS OF STRUCTURE REMOVED

REMOVAL SHALL CONFORM TO THE REMOVAL NOTE OF THESE GENERAL NOTES AND ITEM 202 WITH THE FOLLOWING MODIFICATIONS AND ADDITIONS:

A CAREFUL, DETAILED VISUAL INSPECTION HAS BEEN MADE OF ALL THE STRUCTURAL STEEL MEMBERS. BASED ON THIS INSPECTION MEMBERS OR PARTS OF MEMBERS WHICH WILL REQUIRE REPLACEMENT OR REPAIR HAVE BEEN IDENTIFIED ON THE PLANS.

THE CONTRACTOR SHALL PROVIDE THE NECESSARY EQUIPMENT PRIOR TO BEGINNING OF WORK FOR THE PURPOSE OF RE-EXAMINING THE EXISTING STRUCTURE. THE CONTRACTOR'S SUPERINTENDENT OR APPROVED REPRESENTATIVE SHALL ACCOMPANY THE ENGINEER AND CONSULTANT AT THIS TIME IN MAKING A DETAILED EXAMINATION OF THE REPAIRS TO BE MADE. THE EQUIPMENT SHALL BE FURNISHED FOR WHATEVER LENGTH OF TIME MAY BE NECESSARY TO CONDUCT THIS EXAMINATION. NO SEPARATE PAYMENT WILL BE MADE TO THE CONTRACTOR TO COVER ANY COSTS OF THIS INSPECTION, INCLUDING EQUIPMENT AND PERSONNEL. THE COST FOR THIS WORK SHALL BE INCLUDED IN THE CONTRACT PRICE BID FOR OTHER ITEMS OF WORK.

THE PLANS SHOW ONLY REPAIRS CONSIDERED NECESSARY BASED ON INSPECTIONS WHICH HAVE BEEN MADE. BASED UPON THE ADDITIONAL INSPECTIONS AND CONDITIONS WHICH MAY BE DISCLOSED AS THE WORK PROGRESSES, THE ENGINEER MAY DETERMINE THAT ADDITIONAL MEMBERS OR PARTS OF MEMBERS ARE TO BE REMOVED. IN SUCH CASES ADDITIONAL PLANS WILL BE PREPARED BY THE CONSULTANT AND THE CONTRACTOR SHALL PROCEED WITH ALL WORK AS DIRECTED.

STRUCTURAL STEEL MEMBERS DESIGNATED BY THE PLANS FOR REMOVAL MAY BE REMOVED BY METHODS OF THE CONTRACTOR'S SELECTION AND AS APPROVED BY THE ENGINEER. CARE SHALL BE EXERCISED TO PREVENT DAMAGE TO THE REMAINING PORTION OF THE STRUCTURE INCLUDING THE ROOF DECK IN THE ENCLOSED AREAS. IN CASE OF DAMAGE TO THE EXISTING STRUCTURE, REPAIR OR REPLACEMENT SHALL BE MADE AT THE CONTRACTOR'S EXPENSE AND WITH THE APPROVAL OF THE ENGINEER.

THE REMOVAL OF STRUCTURAL STEEL, BEARING SEATS AND PLATES, RIVETS, FIELD DRILLING OF EXISTING MEMBERS FOR BOLTED CONNECTIONS, AND SUPPORT ANGLES AND GUSSET PLATES SHALL BE INCLUDED IN THIS ITEM.

PAYMENT WILL BE MADE ON PLAN QUANTITY, EXCEPT THAT ADDITIONAL PAYMENT SHALL BE MADE FOR REMOVAL OF MEMBERS NOT INDICATED FOR REMOVAL ON THE PLANS, AT THE UNIT PRICE BID IN POUNDS FOR STRUCTURAL STEEL PORTIONS OF STRUCTURE REMOVED.

REMOVAL OF STRUCTURAL STEEL EMBEDDED WITHIN OR ATTACHED DIRECTLY TO THE CONCRETE DECK, INCLUDING END DAM FRAMING FOR EXPANSION JOINTS, CURB PLATES, FENCE SUPPORTS, UTILITY DUCT SUPPORTS AND OTHER MISCELLANEOUS STEEL SECTIONS SHALL NOT BE INCLUDED UNDER THIS ITEM, BUT SHALL BE PAID FOR UNDER OTHER ITEMS OF WORK. THE PAYMENT QUANTITY SHALL NOT INCLUDE EXISTING STRUCTURAL STEEL WHICH IS TO BE REMOVED AND REUSED IN THE COMPLETED STRUCTURE. PAYMENT FOR THIS WORK SHALL BE CONSIDERED AS INCLUDED IN THE UNIT PRICE BID FOR OTHER ITEMS OF WORK AND NO SEPARATE PAYMENT WILL BE MADE.

ITEM 509 - REINFORCING STEEL, GRADE 60, AS PER PLAN

THIS ITEM SHALL CONSIST OF FURNISHING AND PLACING NON-EPOXY COATED DEFORMED BARS FOR ITEM 511, CLASS S CONCRETE, SUPERSTRUCTURE, STRUCTURAL DECK, AND FOR THE VARIOUS PATCHING EXISTING DECK SLAB ITEMS.

WELDED WIRE FABRIC REQUIRED UNDER VARIOUS 511 ITEMS AREAS ARE NOT INCLUDED UNDER THIS ITEM FOR PAYMENT.

CLEARANCE TO CONCRETE, SPLICE LOCATIONS, MINIMUM LAP LENGTHS AND MINIMUM DEVELOPMENT LENGTHS ARE SHOWN ON THE PLANS. SPLICES, WHERE PERMITTED, SHALL PROVIDE A LAP FOR THE MINIMUM LENGTHS SHOWN ON THE PLANS.

CERTAIN OF THE UNITS ARE DESIGNATED FOR COMPLETE REPLACEMENT ON THE PLANS. FOR THESE UNITS DETAILED REINFORCEMENT SCHEDULES AND BAR BENDING DIAGRAMS ARE INCLUDED IN THE PLANS.

OTHER UNITS SHOW AREAS OF FULL DEPTH SLAB REPLACEMENT AND LIMITS FOR PATCHING OF THE DECK SLABS. THE LIMITS FOR PATCHING ARE APPROXIMATE AND WILL VARY BASED ON THE FIELD INSPECTIONS AT THE TIME OF CONSTRUCTION. AT THE TIME THE REMOVAL OPERATIONS ARE COMPLETE IN THESE UNITS THE CONSULTANT WILL PREPARE DETAILED BAR SCHEDULES AND BENDING DIAGRAMS FOR THE USE OF THE CONTRACTOR. THE POUNDS OF REINFORCING STEEL SHOWN ON THE PLANS AS REQUIRED IN THESE UNITS ARE APPROXIMATE. PAYMENT SHALL BE BASED ON THE WEIGHT OF REINFORCING STEEL INCORPORATED INTO THE CONCRETE BASED ON THE FINAL REINFORCEMENT SCHEDULES.

WHERE NEW CONCRETE WORK IS TIED INTO EXISTING CONCRETE, THE EXISTING REINFORCING STEEL THAT IS TO REMAIN SHALL BE THOROUGHLY CLEANED.

ON THE SOUTH SIDE OF HURON ROAD THE TOP REINFORCEMENT IN THE SAFETY CURB AND IN THE ROADWAY FACE OF THE PARAPET SHALL BE EPOXY COATED. THE LOCATIONS OF ADDITIONAL EPOXY COATED REINFORCEMENT ARE SHOWN ON THE PLANS. PAYMENT FOR THESE BARS WILL BE AT THE UNIT PRICE BID FOR ITEM SPECIAL - EPOXY COATED REINFORCING STEEL (SEE PROPOSAL NOTE).

ITEM 510 - DOWEL HOLES

DOWEL HOLES SHALL MEET THE REQUIREMENTS OF ODOT CMS ITEM 510 WITH THE FOLLOWING ADDITIONS:

1. DOWEL HOLES SHALL BE DRILLED IN THE ABUTMENTS AS PER PLAN.
2. GROUTING OF BARS SHALL COMPLY WITH ODOT SUPPLEMENTAL SPECIFICATION 853 "GROUT ANCHORING WITH NON-SHRINKING EPOXY MORTAR" AND ODOT SUPPLEMENTAL SPECIFICATION 856 "NON-SHRINKING EPOXY MORTAR FOR GROUT ANCHORING".
3. IN LIEU OF THE GROUT METHODS SET FORTH IN 1 & 2 ABOVE THE CONTRACTOR MAY USE A CAPSULE ANCHORING SYSTEM. THE SIZE AND DEPTH OF DRILLED HOLE SHALL BE AS PER MANUFACTURERS RECOMMENDATIONS. THE CAPSULE ANCHORS SHALL BE "MOLLY PARABOND" AS MANUFACTURED BY EMHART FASTENER GROUP, 46470 ROUTE 162 WEST MOLLY DIVISION, 504 MT. LAUREL AVENUE, TEMPLE, PENNSYLVANIA 19560, "CELTITE" RESIN SYSTEM AS MANUFACTURED BY CELTITE, INC., P. O. BOX 33024, CLEVELAND, OHIO 44133 OR AN APPROVED EQUAL.

THE WORK UNDER THIS ITEM SHALL INCLUDE ALL LABOR, MATERIALS, TOOLS AND EQUIPMENT NECESSARY TO COMPLETE THE WORK AS SPECIFIED HEREIN.

PAYMENT FOR THIS ITEM SHALL BE MADE AT THE CONTRACT UNIT PRICE BID PER EACH FOR BID ITEM 510 - DOWEL HOLES.

ITEM 511 - SUPERSTRUCTURE CONCRETE

GENERAL

WORK UNDER THE VARIOUS 511 ITEMS SHALL CONSIST OF FURNISHING AND PLACING CONCRETE IN ACCORDANCE WITH THESE SPECIFICATIONS AND WITH THE DETAILS SHOWN ON THE PLANS. THE WORK, IN GENERAL, SHALL CONFORM TO ITEM NO. 511 WITH THE ADDITIONS AND MODIFICATIONS HEREIN:

CONCRETE WORK INCLUDES THE ROADWAY FILL, SIDEWALK WEARING SURFACE, FULL DEPTH AREAS OF SLAB REPLACEMENT AS SHOWN ON THE PLANS AND BEAM FIREPROOFING.

CONCRETE REQUIRED FOR THE VARIOUS PATCHING EXISTING SLAB ITEMS AND THE CONCRETE FOR THE EXPANSION JOINT BLOCK OUTS ARE NOT INCLUDED UNDER THIS ITEM FOR PAYMENT.

PROPORTIONS

CONCRETE FOR THE REHABILITATION PROJECT SHALL BE PROPORTIONED ACCORDING TO ITEM 499.03 USING THE FOLLOWING CONCRETE CLASSIFICATIONS:

1. CLASS C CONCRETE
   - A. ROADWAY FILL CONCRETE.
   - B. SLAB REPLACEMENT ADJACENT TO THE EXPANSION JOINTS.
   - C. PARTIAL AND FULL DEPTH PATCHING TO EXISTING SLAB (INCLUDED FOR PAYMENT UNDER ITEM SPECIAL - PATCHING EXISTING CONCRETE DECK SLABS).
2. CLASS S CONCRETE
   - A. SIDEWALK WEARING SURFACE COURSE.
   - B. COMPLETE REPLACEMENT UNITS.
   - C. SAFETY CURB ON SOUTH SIDE OF HURON ROAD.
   - D. PARAPETS.
   - E. EXPANSION JOINT BLOCK OUT AREAS (INCLUDED FOR PAYMENT UNDER ITEM 516 - EXPANSION JOINTS).

REMOVAL

EXISTING CONCRETE BEING REPLACED UNDER THIS ITEM SHALL BE REMOVED AS INDICATED IN ITEM 202. ITS REMOVAL IS NOT INCLUDED FOR PAYMENT UNDER THIS ITEM.

SURFACE PREPARATION

SURFACES AGAINST WHICH NEW CONCRETE IS TO BE PLACED SHALL BE THOROUGHLY CLEANED BY SANDBLASTING FOLLOWED BY AN AIR BLAST. IT MAY BE NECESSARY TO USE HAND TOOLS TO REMOVE SCALE FROM EXISTING REINFORCING STEEL WHICH IS TO REMAIN IN THE NEW CONSTRUCTION.

BONDING GROUT

APPLICATION OF THE BONDING GROUT SHALL CLOSELY FOLLOW THE SURFACE PREPARATION. THE GROUT SHALL CONSIST OF EQUAL PARTS BY VOLUME OF PORTLAND CEMENT AND SAND, MIXED WITH SUFFICIENT WATER TO FORM A STIFF SLURRY. THE CONSISTENCY OF THIS SLURRY SHALL BE SUCH THAT IT CAN BE APPLIED WITH A STIFF BRUSH OR BROOM TO THE EXISTING SURFACE IN A THIN, UNIFORM COATING. THE COATING OF GROUT SHALL BE SCRUBBED ONTO THE DRY SURFACE IMMEDIATELY BEFORE PLACING THE CONCRETE. CARE SHALL BE EXERCISED TO INSURE THAT NO EXCESS GROUT IS PERMITTED TO COLLECT IN LOW SPOTS. IN NO CASE SHALL THE GROUT BE PERMITTED TO DRY BEFORE PLACING THE NEW CONCRETE. THINNED GROUT SHALL BE PAINTED OVER ALL JOINTS BETWEEN THE NEW AND EXISTING CONCRETE IMMEDIATELY AFTER THE FINISHING HAS BEEN COMPLETED.

ROADWAY FILL CONCRETE

ROADWAY FILL CONCRETE SHALL BE USED TO REPLACE THE EXISTING WATERPROOFING CONCRETE AND CONSTRUCTED TO THE DIMENSIONS SHOWN ON THE PLANS.

WELDED WIRE FABRIC 6 x 6 - W 4 x W 4 SHALL BE PLACED WITHIN THE FILL CONCRETE.

THE ROADWAY FILL CONCRETE SHALL BE PLACED AFTER THE STRUCTURAL DECK REPAIRS ARE COMPLETED.

LONGITUDINAL CONTROL JOINTS SHALL BE PLACED IN THE ROADWAY FILL CONCRETE AS SHOWN ON THE PLANS. TRANSVERSE CONTROL JOINTS SHALL BE PLACED AT 30 FEET MAXIMUM. THE CONTROL JOINTS SHALL BE CONSTRUCTED BY SAWING OR BY FORMING. THE JOINT SEALANT SHALL BE DURASEAL POLYURETHANE JOINT SEALANT AS MANUFACTURED BY DURAL INTERNATIONAL CORPORATION, DEER PARK, NEW YORK, SIKAFLEX POLYURETHANE JOINT SEALANT AS MANUFACTURED BY SIKA CHEMICAL CORPORATION, LYNDHURST, NEW JERSEY OR AN APPROVED EQUAL.

THE SURFACE OF THE FILL CONCRETE SHALL BE GIVEN A BURLAP DRAG FINISH FOR APPLICATION OF THE WATERPROOFING MEMBRANE.

PAYMENT WILL BE MADE AT THE CONTRACT UNIT PRICE BID PER CUBIC YARD FOR ITEM 511, CLASS C CONCRETE, SUPERSTRUCTURE FILL, INCLUDING WIRE MESH. THE UNIT PRICE BID SHALL INCLUDE THE FULL COSTS OF ALL LABOR, MATERIALS AND EQUIPMENT NECESSARY TO COMPLETE THE WORK AS SHOWN ON THE PLANS AND SPECIFIED HEREIN. THE WELDED WIRE FABRIC, JOINTS AND SEALANT SHALL BE INCLUDED IN THE UNIT PRICE BID

SIDEWALK WEARING SURFACE CONCRETE

SIDEWALK WEARING SURFACE CONCRETE SHALL BE PLACED ABOVE THE SIDEWALK WATERPROOFING MATERIAL TO THE DIMENSIONS SHOWN ON THE PLANS.

EPOXY COATED WELDED WIRE FABRIC 6 x 6 W4 x W4 SHALL BE PLACED WITHIN THE SIDEWALK CONCRETE.

THE SIDEWALK PATTERN LAYOUT IS SHOWN ON SHEETS 139 THRU 143. THE SIDEWALK PATTERN IS MADE UP OF THE FOLLOWING THREE DISTINCT TYPES OF CONCRETE ALL CLASS S:

1. SCORED GREY CONCRETE (TYPE A IN PLANS) CLASS S CONCRETE AS PER ITEM 499.
2. EXPOSED AGGREGATE CONCRETE (TYPE B IN PLANS) - THE CEMENT WILL BE ASTM C150, TYPE I. GRAY, WHITE OR BUFF OR ANY MIXTURE REQUIRED TO FABRICATE SAMPLES ACCEPTABLE TO THE ENGINEER IN COLOR THE AGGREGATE SHALL BE AN EVENLY GRADED GRANITE FROM 1/32 INCH TO 3/8 INCH IN A COLOR TO BE SELECTED BY THE ENGINEER FROM THE ENTIRE RANGE OF GRANITE AVAILABLE. CHEMICAL SURFACE RETARDER SHALL BE "RUGASOL C" BY SIKA CHEMICAL CORPORATION OR AN APPROVED EQUAL.
3. SPECIALLY IMPRINTED TEXTURE CONCRETE (TYPE C IN PLANS) - CLASS S CONCRETE SHALL BE USED WITH MAXIMUM SIZE COURSE AGGREGATE OF 3/8 INCH COLOR FOR CONCRETE SHALL BE SELECTED BY THE ENGINEER FROM THE CUSTOM COLOR CHART. A DUST ON HARDENER, LIQUID APPLIED COLOR CURING COMPOUND AND IMPRINTING TOOL IN A QUARRY TILE 12 INCH BY 12 INCH UNGROUTED PATTERN SHALL BE APPLIED AS PER MANUFACTURERS RECOMMENDATIONS. HARDENER, CURING COMPOUND AND IMPRINTING TOOL SHALL BE MANUFACTURED AND SUPPLIED BY THE BOMONITE CORPORATION. 81 ENCINA AVENUE, PALO ALTO, CALIFORNIA OR AN APPROVED EQUAL.

   A SURFACE SEALER SHALL BE APPLIED TO THE TEXTURED CONCRETE AS PER MANUFACTURERS SPECIFICATIONS. SEALER SHALL BE AS MANUFACTURED BY SIKA CHEMICAL CORPORATION DURAL INTERNATIONAL CORPORATION OR AN APPROVED EQUAL.

THREE TYPES OF SIDEWALK CONCRETE SHALL BE SEPARATED BY A CONSTRUCTION JOINT. THE CONSTRUCTION JOINT SHALL BE SEALED BY A JOINT SEALER SIMILAR TO THE SEALER USED BEHIND THE CURB PLATE.

THE CONTRACTOR SHALL SUBMIT TO THE ENGINEER FOR APPROVAL SAMPLES OF THE GRANITE AGGREGATE INTENDED FOR USE IN THE EXPOSED AGGREGATE PAVING WORK; TYPE B ON DRAWINGS.

AT LEAST THREE WEEKS IN ADVANCE OF PAVING WORK, SUBMIT A LIST STATING SOURCES OF MATERIALS AND JOB MIX FORMULAS FOR PAVING MATERIALS AS SPECIFIED.

DURING INSTALLATION OF PAVING, ADEQUATE PROTECTION, SUCH AS MASKING OF ALL ADJACENT SURFACES, SHALL BE PROVIDED. SHOULD ANY PART OF SUCH ADJACENT CONSTRUCTION BE SOILED OR DAMAGED, IT SHALL BE CLEANED, REPAIRED OR REPLACED TO THE SATISFACTION OF THE ENGINEER AT THE CONTRACTOR'S EXPENSE.

THE CONTRACTOR SHALL CAST AND FINISH 4' x 4' SAMPLE PANELS OF EACH TYPE OF CONCRETE PAVEMENT FINISH IN THE QUANTITIES LISTED BELOW. THE PANELS SHALL BE INSPECTED AND APPROVED BY THE ENGINEER PRIOR TO THE PLACEMENT OF ANY PROJECT SIDEWALK PAVING:

1. SCORED GREY CONCRETE (TYPE A IN PLANS) - ONE (1) SAMPLE PANEL.
2. EXPOSED AGGREGATE CONCRETE (TYPE B IN PLANS) - AFTER CONSULTATION WITH THE ENGINEER TO DETERMINE THE GENERAL APPEARANCE DESIRED IN THE CONCRETE. THE CONTRACTOR SHALL PREPARE FIVE (5) SAMPLE PANELS.
3. SPECIALLY IMPRINTED TEXTURED CONCRETE (TYPE C IN PLANS) - ENGINEER SHALL SELECT A COLOR DESIRED AND SUBMIT IT TO THE CONTRACTOR. THE CONTRACTOR SHALL PREPARE ONE (1) SAMPLE PANEL UTILIZING THE PATTERN LISTED HEREIN.

ADDITIONAL SAMPLE PANELS SHALL BE CAST AND FINISHED BY THE CONTRACTOR, AS REQUIRED BY THE ENGINEER IF INITIAL SAMPLE PANELS DO NOT MEET SPECIFICATION REQUIREMENTS.

UPON APPROVAL BY THE ENGINEER, THE SAMPLE PANELS SHALL BE LEFT AT THE JOB SITE AND SHALL BECOME THE STANDARD OF WORKMANSHIP TO WHICH ALL CORRESPONDING PROJECT CONCRETE WORK SHALL CONFORM.

THE SIDEWALK JOINT SHALL BE LOCATED AS SHOWN ON THE PLANS AND SHALL BE 3/4" DEEP WITH EDGES ROUNDED TO A 1/4" RADIUS.

THE JOINT SEALANT SHALL BE DURASEAL POLYURETHANE JOINT SEALANT AS MANUFACTURED BY DURAL INTERNATIONAL CORPORATION, DEER PARK, NEW YORK, SIKAFLEX POLYURETHANE JOINT SEALANT AS MANUFACTURED BY SIKA CHEMICAL CORPORATION. LYNDHURST, NEW JERSEY OR AN APPROVED EQUAL.

PAYMENT WILL BE MADE AT THE CONTRACT UNIT PRICE BID PER CUBIC YARD FOR ITEM 511, CLASS S CONCRETE, SUPERSTRUCTURE SIDEWALK, INCLUDING WIRE MESH. THE UNIT PRICE BID SHALL INCLUDE THE FULL COSTS OF ALL LABOR, MATERIALS AND EQUIPMENT NECESSARY TO COMPLETE THE WORK AS SHOWN ON THE PLANS AND SPECIFIED HEREIN. THE WELDED WIRE FABRIC, JOINTING, SEALANTS AND MEMBRANE COATING SHALL BE INCLUDED IN THE UNIT PRICE BID.

STRUCTURAL DECK CONCRETE - REPAIRS

THIS ITEM INCLUDES THE SLAB REPLACEMENT ADJACENT TO THE EXPANSION JOINTS TO THE LIMITS SHOWN ON THE PLANS, AREAS DESIGNATED ON THE PLANS FOR FULL DEPTH REPLACEMENT AND CONCRETE FOR UTILITY VAULTS.

THE CONCRETE SHALL BE PLACED TO THE DIMENSIONS SHOWN ON THE PLANS IN GENERAL THE BOTTOM OF THE REPAIRED DECK SHALL MATCH THE EXISTING BOTTOM OF DECK.

PAYMENT FOR THE WORK AS DESCRIBED HEREIN WILL BE MADE AT THE CONTRACT UNIT PRICE BID PER CUBIC YARD FOR ITEM 511 - CLASS C CONCRETE SUPERSTRUCTURE, STRUCTURAL DECK REPAIRS. THE UNIT PRICE BID SHALL INCLUDE THE FULL COST OF ALL LABOR, MATERIALS AND EQUIPMENT NECESSARY TO COMPLETE THE WORK AS SHOWN ON THE PLANS AND SPECIFIED HEREIN.

FURNISHING AND PLACING REINFORCING STEEL WITHIN THE STRUCTURAL DECK CONCRETE SHALL BE INCLUDED FOR PAYMENT UNDER ITEM 509 - REINFORCING STEEL OR ITEM SPECIAL - EPOXY COATED REINFORCING STEEL.

STRUCTURAL DECK REPLACEMENTS BEYOND THE LIMITS IDENTIFIED IN THE PLANS FOR FULL DEPTH REPLACEMENT ARE NOT INCLUDED FOR PAYMENT UNDER THIS ITEM BUT WILL BE PAID FOR UNDER THE APPROPRIATE PATCHING CONCRETE DECK SLAB ITEM

STRUCTURAL DECK CONCRETE - COMPLETE REPLACEMENT SAFETY CURB AND PARAPETS

THIS ITEM INCLUDES THE CONCRETE IN THE UNITS THAT ARE BEING COMPLETELY REPLACED; ALL PARAPETS AND THE SAFETY CURB ON THE SOUTH SIDE OF HURON ROAD.

THE CONCRETE SHALL BE PLACED TO THE DIMENSIONS SHOWN ON THE PLANS.

THE CONCRETE PARAPETS SHALL HAVE DEFLECTION JOINTS SPACED AS SHOWN ON THE PLANS. REINFORCING BARS SHALL NOT EXTEND THROUGH THE DEFLECTION JOINTS. CONCRETE IN THE PARAPET ABOVE THE UPPER CONSTRUCTION JOINT SHALL BE PLACED IN ALTERNATE SECTIONS BY THE USE OF BULKHEADS. CLOSING SECTIONS SHALL BE PLACED AFTER REMOVAL OF BULKHEADS AND AFTER PLACEMENT OF EXPANSION JOINT FILLER. EXPOSED EDGES OF THE FILLER SHALL BE FLUSH WITH THE SURFACE OF CONCRETE AND SHALL BE FREE OF MORTAR. PREFORMED EXPANSION JOINT FILLER IN THE PARAPET DEFLECTION JOINTS MAY BE EITHER 1/4" GRAY SPONGE RUBBER OR 1/4" GRAY CELLULAR POLYVINYL CHLORIDE (PVC) SPONGE. IF RUBBER IS USED IT SHALL MEET THE REQUIREMENTS OF AASHTO M 153.

SLEEVES FOR THE FENCING ON TOP OF THE PARAPETS SHALL BE IN PLACE BEFORE PLACING THE CONCRETE.

ANCHOR BOLTS FOR LIGHT POLES SHALL BE IN PLACE IN THE SAFETY CURB AND SIDEWALK BEFORE PLACING THE CONCRETE.

THE TOP AND EXPOSED ROADWAY SIDE OF THE PARAPETS AND SAFETY CURBS SHALL RECEIVE A PROTECTIVE WATERPROOFING AND ANTI-GRAFFITI COATING OF A CLEAR NON-YELLOWING, POLYURETHANE SOLVENT BASE MATERIAL.

THE WATERPROOFING COATING SHALL BE DURALTHANE 1004 AS MANUFACTURED BY DURAL INTERNATIONAL CORPORATION, SIKAGARD 619 AS MANUFACTURED BY SIKA CHEMICAL CORPORATION, OR AN APPROVED EQUAL.

PAYMENT FOR THE WORK AS DESCRIBED HEREIN WILL BE MADE AT THE CONTRACT UNIT PRICE BID PER CUBIC YARD FOR ITEM 511, CLASS S CONCRETE, SUPERSTRUCTURE, STRUCTURAL DECK - COMPLETE REPLACEMENT SAFETY CURB AND PARAPETS. THE UNIT PRICE BID SHALL INCLUDE THE FULL COST OF ALL LABOR, MATERIALS, AND EQUIPMENT NECESSARY TO COMPLETE THE WORK AS SHOWN ON THE PLANS AND SPECIFIED HEREIN. PREFORMED EXPANSION JOINT FILLER FOR THE PARAPET DEFLECTION JOINTS AND WATERPROOFING COATING SHALL BE INCLUDED IN THE UNIT PRICE BID

FURNISHING AND PLACING REINFORCING STEEL WITHIN THE STRUCTURAL DECK CONCRETE SHALL BE INCLUDED FOR PAYMENT UNDER ITEM 509, REINFORCING STEEL OR ITEM, SPECIAL, EPOXY COATED REINFORCING STEEL.

GENERAL NOTES

FHWA REGION	STATE	PROJECT	
5	OHIO	M-ID 99 (9)	

15
170

CUYAHOGA COUNTY
HURON / PROSPECT BRIDGE

FIREPROOFING CONCRETE

CONCRETE FOR FIREPROOFING PROTECTION SHALL BE PLACED OVER EXISTING BEAMS AT THE LOCATIONS SHOWN ON THE PLANS.

THE FIREPROOFING SHALL EXTEND NOT LESS THAN 2" BEYOND THE EXTREME EDGES OF METAL.

THE FIREPROOFING SHALL BE REINFORCED WITH A WIRE MESH REINFORCEMENT AS SHOWN ON THE PLANS. THE MESH SHALL CONSIST OF NO. 12 WIRES RUNNING IN BOTH DIRECTIONS AT 4" x 12" SPACING. ALL MESH SHALL BE PLACED IN POSITION BEFORE THE CONCRETE IS DEPOSITED. GREAT CARE SHALL BE TAKEN IN DEPOSITING THE CONCRETE TO SEE THAT THE MESH REMAINS IN PLACE AND IS THOROUGHLY EMBEDDED IN THE CONCRETE.

PAYMENT WILL BE MADE AT THE CONTRACT UNIT PRICE BID PER CUBIC YARD FOR ITEM 511, CLASS C CONCRETE, SUPERSTRUCTURE BEAM FIREPROOFING, INCLUDING WIRE MESH. THE UNIT PRICE BID SHALL INCLUDE THE FULL COSTS OF ALL LABOR, MATERIALS, AND EQUIPMENT NECESSARY TO COMPLETE THE WORK AS SHOWN ON THE PLANS AND SPECIFIED HEREIN. THE WELDED WIRE FABRIC SHALL BE INCLUDED IN THE UNIT PRICE BID.

METHOD OF MEASUREMENT

THE YARDAGE SHALL BE THE NUMBER OF CUBIC YARDS DETERMINED BY CALCULATIONS FROM PLAN DIMENSIONS, IN PLACE, COMPLETE AND ACCEPTED.

NO DEDUCTION WILL BE MADE FOR THE VOLUME OF REINFORCING STEEL, CONDUITS OR STRUCTURAL STEEL OTHER THAN BEAM FLANGES EMBEDDED IN DECK SLABS.

ITEM 513 - STRUCTURAL STEEL

GENERAL

STRUCTURAL STEEL SHALL CONFORM TO ITEM 513 AND TO THE MODIFICATIONS AND ADDITIONS THERETO, NOTED HEREIN. THE CONTRACTOR SHALL FURNISH ALL LABOR, MATERIALS, TOOLS AND EQUIPMENT NECESSARY TO ERECT ALL NEW STRUCTURAL STEEL AND MAKE REPAIRS TO THE EXISTING STEEL, AS INDICATED HEREIN AND AS SHOWN ON THE PLANS.

ALL MOMENT PLATES AND SPLICE PLATES CONNECTING MEMBERS DESIGNATED CVN SHALL ALSO SATISFY CVN REQUIREMENTS.

MATERIALS

STRUCTURAL STEEL SHALL BE ASTM A-36, UNLESS OTHERWISE NOTED. BOLTED CONNECTIONS SHALL BE MADE WITH 7/8" Ø OR 1" Ø HIGH-STRENGTH STEEL BOLTS, AS NOTED ON THE PLANS. HIGH-STRENGTH BOLTS, NUTS AND WASHERS SHALL BE ASTM A-325 STEEL.

REPAIRS TO EXISTING STRUCTURAL STEEL

THE PLANS SHOW ONLY REPAIRS CONSIDERED NECESSARY BASED ON INSPECTIONS WHICH HAVE BEEN MADE. BASED UPON THE ADDITIONAL INSPECTIONS AND CONDITIONS WHICH MAY BE DISCLOSED AS THE WORK PROGRESSES, THE ENGINEER MAY DETERMINE THAT ADDITIONAL MEMBERS OR PARTS OF MEMBERS ARE TO BE REPLACED. IN SUCH CASES, ADDITIONAL PLANS WILL BE PREPARED BY THE CONSULTANT AND THE CONTRACTOR SHALL PROCEED WITH ALL WORK AS DIRECTED.

THE DIMENSIONS SHOWN ON THE EXISTING STRUCTURAL STEEL MEMBERS AND CONNECTIONS, IN CONJUNCTION WITH THE REPAIR AND REPLACEMENT DETAILS, ARE FROM THE ORIGINAL PLANS. THE CONTRACTOR SHALL BE RESPONSIBLE FOR MAKING HIS OWN MEASUREMENTS, BEFORE FABRICATION, TO INSURE THE VARIOUS PARTS OF THE WORK FIT TOGETHER INTO THE COMPLETED STRUCTURE.

THE CONTRACTOR SHALL REPLACE ANY LOOSE OR MISSING RIVETS WITH HIGH STRENGTH BOLTS OF THE SAME SIZE AS THE REPLACED RIVET. BOLTS SHALL BE PLACED WITH THEIR HEADS ON THE OUTSIDE FACE OF EXTERIOR GIRDERS AND ON THE BOTTOM OF THE FLANGE PLATES.

PAYMENT FOR THE WORK AS DESCRIBED HEREIN WILL BE MADE AT THE CONTRACT UNIT PRICE BID PER POUND FOR ITEM 513 - REPAIRS TO EXISTING STRUCTURAL STEEL. THE UNIT PRICE BID SHALL INCLUDE THE FULL COST OF ALL LABOR, MATERIALS AND EQUIPMENT NECESSARY TO COMPLETE THE WORK AS SHOWN ON THE PLANS AND SPECIFIED HEREIN.

INCLUDED IN THIS ITEM FOR PAYMENT ARE REPAIRS TO BEAMS, GIRDERS, COLUMNS, GIRDER OR BEAM SEATS, BEARING PLATES, BEVEL PLATES, GUSSET PLATES, SUPPORT ANGLES, BRACES, STIFFENERS, COVER PLATES, CLIP ANGLES, CASTINGS, BOLTS AND WELDING.

SHOP PAINTING OF THE NEW STEEL SHALL CONFORM TO ITEM 514.

THE PAYMENT QUANTITY FOR THIS ITEM SHALL BE THE QUANTITY OF NEW STRUCTURAL STEEL INCORPORATED INTO THE COMPLETED CONSTRUCTION FROM THE APPROVED SHOP DRAWINGS. THE PAYMENT QUANTITY SHALL NOT INCLUDE EXISTING STRUCTURAL STEEL WHICH IS TO BE REMOVED AND REUSED IN THE COMPLETED STRUCTURE. PAYMENT FOR THIS WORK AND ANY OTHER WORK ON THE EXISTING STRUCTURAL STEEL NOT COVERED ELSEWHERE SHALL BE CONSIDERED AS INCLUDED IN THE UNIT PRICES BID FOR OTHER ITEMS OF WORK AND NO SEPARATE PAYMENT WILL BE MADE.

CURB PLATES

STRUCTURAL STEEL FOR CURB PLATES SHALL BE A588. THE ANCHOR STUDS SHALL BE EPOXY COATED.

THE EXPOSED SURFACES OF THE CURB PLATE SHALL BE FIELD PAINTED. PAINTING SHALL CONFORM TO ITEM 514 SYSTEM B - FIELD PAINTING OF NEW STRUCTURAL STEEL. FIELD PAINTING SHALL CONSIST OF TWO PRIME COATS AND ONE FINISH COAT.

PAYMENT FOR THE CURB PLATES AND ANCHORS WILL BE MADE AT THE CONTRACT UNIT PRICE BID PER POUND FOR ITEM 513 - STRUCTURAL STEEL FOR CURB PLATES. THE UNIT PRICE BID SHALL INCLUDE THE FULL COSTS OF ALL LABOR, MATERIALS AND EQUIPMENT NECESSARY TO COMPLETE THE WORK AS SHOWN ON THE PLANS AND SPECIFIED HEREIN.

EXPANSION JOINT FRAMING

EXPANSION JOINT END DAM FRAMING MEMBERS SHALL BE A588 STEEL.

THE DIMENSIONS SHOWN FOR THESE MEMBERS ARE BASED ON DIMENSIONS FROM THE ORIGINAL PLANS. THE CONTRACTOR SHALL BE RESPONSIBLE FOR MAKING HIS OWN MEASUREMENTS, BEFORE FABRICATION, TO INSURE THE VARIOUS PARTS OF THE WORK FIT TOGETHER INTO THE COMPLETED STRUCTURE.

PAYMENT FOR THE WORK AS DESCRIBED HEREIN WILL BE MADE AT THE CONTRACT UNIT PRICE BID PER POUND FOR ITEM 513 - STRUCTURAL STEEL FOR EXPANSION JOINT END DAM FRAMING. THE UNIT PRICE BID SHALL INCLUDE THE FULL COSTS OF ALL LABOR, MATERIALS AND EQUIPMENT NECESSARY TO COMPLETE THE WORK AS SHOWN ON THE PLANS AND SPECIFIED HEREIN.

THE STEEL EXTRUSIONS AND ANCHORS SUPPORTING THE EXPANSION JOINT STRIP SEALS, AND THE SUPPORT ANGLES ALONG THE BUILDING LINE EXPANSION JOINTS, ARE NOT INCLUDED WITH THIS ITEM FOR PAYMENT BUT ARE INCLUDED WITH THE EXPANSION JOINTS.

ITEM 514 FIELD PAINTING OF NEW STRUCTURAL STEEL, SYSTEM B

FIELD PAINTING OF NEW STRUCTURAL STEEL SHALL CONFORM TO ITEM 514, SYSTEM B AND SHALL CONSIST OF TWO PRIME COATS AND ONE FINISH COAT AND SHALL INCLUDE THE FOLLOWING:

1. REPAIR AND REPLACEMENT STEEL.
2. CURB PLATES.
3. STEEL EXTRUSIONS (INCLUDED FOR PAYMENT UNDER ITEM 516 - EXPANSION JOINTS).
4. SIDEWALK JOINT COVER PLATES (INCLUDED FOR PAYMENT UNDER ITEM 516 EXPANSION JOINTS.

PAYMENT SHALL BE MADE AT THE UNIT PRICE BID PER POUND.

ITEM 514 - CLEANING AND PAINTING OF EXISTING STRUCTURAL STEEL

CLEANING AND PAINTING OF EXISTING STRUCTURAL STEEL SHALL CONFORM TO ITEM NO. 514 WITH THE FOLLOWING MODIFICATIONS:

ALL EXPOSED STRUCTURAL STEEL SHALL BE CLEANED AND PAINTED. EXPOSED STRUCTURAL STEEL IS DEFINED AS FOLLOWS:

1. ALL EXPOSED STEEL FROM TRACK LEVEL TO THE UNDERSIDE OF THE CONCRETE DECK, INCLUDING STEEL EXPOSED DUE TO REPAIRS OR REPLACEMENT OF CONCRETE CRASH WALLS AND/OR CONCRETE FIRE PROTECTION; IN UNITS 1 THRU 3 TO THE BUILDING LINE IN UNIT 3 IN PROSPECT AVENUE, UNITS 14 THRU 18 AND UNITS 26 THRU 31 TO THE BUILDING LINES IN UNITS 18 AND 26 UNDER HURON ROAD, AND ALL OF WEST 6TH STREET.
2. IN THE REMAINING UNITS WHICH ARE ALL WITHIN THE ENCLOSED AREAS CLEANING AND PAINTING OF STRUCTURAL STEEL SHALL INCLUDE ALL STEEL WITHIN THE LIMITS OF DECK REMOVAL AT THE EXPANSION JOINTS TO THE LEVEL OF THE SUSPENDED CEILING, AND IN CERTAIN OTHER AREAS OF DECK REMOVAL AS INDICATED ON THE PLANS OR AS DIRECTED BY THE ENGINEER.
3. WHEN SANDBLASTING AND PAINTING OVER THE ENCLOSED OCCUPIED AREAS THE CONTRACTOR SHALL PROTECT THE AREAS BELOW FROM DUST AND PAINT. HIS METHOD OF PROTECTION SHALL BE SUBMITTED FOR APPROVAL BY THE ENGINEER.

SPOT PRIME COATING SHALL BE USED ON AREAS WHICH HAVE BEEN CLEANED AND THE STEEL IS BARE OR AREAS WHERE THE PAINT IS THIN. IN ADDITION TO THE SPOT PRIME COAT, FIELD PAINTING SHALL CONSIST OF ONE COMPLETE PRIME COAT AND ONE COMPLETE FINISH COAT. PRIME PAINT FOR SPOT COATS AND COMPLETED PRIME COATS SHALL CONFORM TO 708.19. FINISH PAINT COAT SHALL CONFORM TO 708.08.

ITEM 518 - SUBDRAINAGE FOR WEARING COURSE, AS PER PLAN

WORK UNDER THIS ITEM SHALL CONFORM TO ITEM 518 WITH THE ADDITIONS AND MODIFICATIONS NOTED HEREIN.

SUBDRAINAGE FOR WEARING COURSE SHALL CONSIST OF PLASTIC DRAIN PIPES THROUGH THE DECK AND A LONGITUDINAL CONDUCTOR IN THE GUTTER LINE IN ACCORDANCE WITH THE DETAILS SHOWN ON THE PLANS.

THE LONGITUDINAL CONDUCTORS SHALL BE CONTINUOUS, EXCEPT AT CURB DRAINS WHERE THEY WILL OUTLET INTO THE DRAIN, AND AT EXPANSION JOINTS WHERE THEY WILL TERMINATE IN THE ASPHALT WEARING SURFACE ADJACENT TO THE JOINT AND OUTLET INTO THE PLASTIC DRAIN PIPES. THE DRAIN PIPES WILL BE PICKED UP IN A CLOSED SYSTEM AND TIED INTO THE DRAINAGE SYSTEM AT THE EXPANSION JOINTS, AS SHOWN ON THE PLANS.

THE PRICE BID PER LINEAR FOOT FOR ITEM 518 - SUBDRAINAGE FOR WEARING COURSE, AS PER PLAN SHALL INCLUDE THE COST OF ALL LABOR, MATERIALS, TOOLS AND EQUIPMENT NECESSARY TO INSTALL THE LONGITUDINAL CONDUCTORS, PLASTIC DRAIN PIPES AND FITTINGS, AND TO CONNECT TO THE EXISTING EXPANSION JOINT DRAINAGE SYSTEM, AS SHOWN ON THE PLANS OR AS DIRECTED BY THE ENGINEER.

ITEM 518 - DRAINAGE PIPE

ALL WORK AND MATERIAL SHALL CONFORM TO ITEM 518 WITH THE ADDITIONS AND MODIFICATIONS NOTED HEREIN. PIPE SHALL BE HOT-DIP GALVANIZED STEEL PIPE 707.08. JOINTS SHALL BE MADE BY WELDING OR BY USE OF A CLAMP-TYPE COUPLING WITH A RING GASKET. ALL WELDING SHALL BE DONE BEFORE GALVANIZING. PIPE SUPPORTS SHALL BE THE SAME MATERIAL AS THE PIPE.

THE DRAINAGE PLANS ARE SCHEMATIC AND INTENDED TO SHOW THE GENERAL LAYOUT AND APPROXIMATE LENGTH OF THE SYSTEM. A DETAILED INSPECTION OF THE EXISTING DRAINAGE SYSTEM HAS BEEN MADE. THE LIMITS OF REPLACEMENT CONSIDERED NECESSARY TO REHABILITATE THE SYSTEM ARE SHOWN ON THE PLANS. THE CONTRACTOR SHALL ACCOMPANY THE ENGINEER AND MAKE A DETAILED INSPECTION OF THE DRAINAGE SYSTEM PRIOR TO THE WORK. THE CONTRACTOR SHALL PROVIDE THE NECESSARY EQUIPMENT FOR MAKING THIS INSPECTION. BASED ON THIS INSPECTION THE LIMITS OF REPLACEMENT MAY BE INCREASED DURING CONSTRUCTION.

WHEREAS THE DRAWINGS ARE SCHEMATIC AND DIMENSIONS APPROXIMATE; THE CONTRACTOR SHALL BE RESPONSIBLE FOR MAKING HIS OWN MEASUREMENTS, BEFORE FABRICATION, TO INSURE THE VARIOUS PARTS OF THE DRAINAGE SYSTEM FIT TOGETHER.

CLEANOUTS SHALL BE PROVIDED AT ALL 90^{0} BENDS IN PIPE, AT POINTS WHERE THE DOWNSPOUTS ENTER THE CONCRETE CRASH WALLS AT TRACK LEVEL, AND AT LOCATIONS SHOWN ON THE PLANS.

DRAINAGE PIPE SHALL BE PAID FOR AT THE UNIT PRICE BID PER LINEAR FOOT FOR EACH SIZE SPECIFIED UNDER ITEM 518. THE PRICE BID SHALL INCLUDE THE COST TO REMOVE AND DISPOSE OF THE EXISTING PIPE WHICH IS BEING REPLACED. PIPE SPECIALS SHALL BE MEASURED ALONG THE CENTERLINE AND PAID FOR AT THE UNIT PRICE BID FOR THE CORRESPONDING SIZE PIPE.

ITEM 603 4"&8" CONDUIT TYPE B AS PER PLAN

THIS ITEM SHALL CONFORM TO ODOT CMS ITEMS 603 AND 706.02 AS PER DETAILS IN THE PLANS WITH THE FOLLOWING ADDITIONS:

1. THE LOCATION, ELEVATION, SIZE AND TYPE OF SEWER PIPE TO BE USED IS SHOWN IN THE PLANS.
2. THE LENGTH OF SEWER PIPE TO BE PAID FOR IS MEASURED ALONG THE CENTERLINE OF THE SEWER FROM THE CENTER OF THE DOWN SPOUT TO THE CENTER OF THE EXISTING MANHOLE AND INCLUDES ALL BENDS, CLEANOUTS AND CONNECTIONS NECESSARY TO MAKE THE INSTALLATION AS PER PLANS.
3. CARE SHALL BE TAKEN NOT TO DAMAGE THE EXISTING MANHOLE WHEN BREAKING THROUGH THE WALL TO TIE IN THE NEW CONCRETE PIPE. ANY DAMAGE TO THE EXISTING MANHOLE AS INDICATED BY THE ENGINEER SHALL BE REPAIRED BY THE CONTRACTOR AT NO EXTRA COST TO THE PROJECT. THE COST OF BREAKING THROUGH THE MANHOLE WALL, SETTING THE PIPE AND GROUTING IN THE PIPE SHALL BE INCLUDED IN THE PRICE BID FOR 4" & 8" CONDUIT, TYPE B.
4. THE TOTAL COST OF TRENCHING, FURNISHING AND PLACING GRANULAR BEDDING AND BACKFILL AS REQUIRED, INCLUDING MATERIALS AND LABOR FOR PLACING PIPE SHALL BE INCLUDED IN THE UNIT PRICE BID PER LINEAR FOOT FOR 4" & 8" CONDUIT, TYPE B.

ABUTMENTS AND PIER CRASH WALL REPAIRS

THE CONCRETE ABUTMENTS AND CRASH WALLS AT TRACK LEVEL SHALL BE REPAIRED AS SHOWN ON THE PLANS AND IN ACCORDANCE WITH THESE SPECIFICATIONS.

ALL REPAIR WORK SHALL BE IN ACCORDANCE WITH ITEMS 519 AND 520. IN GENERAL, REPAIRS LESS THAN 6 INCHES DEEP SHALL BE MADE WITH ITEM 520, PNEUMATICALLY PLACED MORTAR; AND REPAIRS OVER 6 INCHES DEEP SHALL BE WITH CONCRETE PATCHES IN ACCORDANCE WITH ITEM 519.

CRASH WALLS SHALL BE COMPLETELY REMOVED IN AREAS OF LOOSE AND DISINTEGRATED CONCRETE IN ORDER TO INSPECT THE CONDITION OF THE ENCASED STEEL COLUMN. THESE CRASH WALLS SHALL NOT BE REPLACED EXCEPT THE WALLS ADJACENT TO THE R.T.A. TRACKS. THE CONCRETE REMOVAL FOR CRASH WALLS NOT BEING REPLACED SHALL BE PAID FOR AT THE UNIT PRICE BID FOR ITEM 202 - CONCRETE PORTIONS OF SUBSTRUCTURE REMOVED, AS PER PLAN.

THE BID ITEM IN SQUARE FEET FOR ITEM 519 - PATCHING CONCRETE STRUCTURES AND ITEM 520 - PNEUMATICALLY PLACED MORTAR SHALL INCLUDE THE FULL COST OF ALL LABOR, MATERIALS, TOOLS, EQUIPMENT AND INCIDENTALS NECESSARY TO COMPLETE THE PATCHING AND REPAIRING OF THE ABUTMENTS AND CRASH WALLS INCLUDING THE COST OF CONCRETE, PNEUMATICALLY PLACED MORTAR, REMOVAL OF LOOSE AND DISINTEGRATED CONCRETE AND REINFORCING STEEL, PLACEMENT OF WIRE FABRIC, PREPARATION OF THE SURFACE, APPLICATION OF A BONDING COMPOUND, DOWELS AND ALL OTHER ITEMS NECESSARY TO COMPLETE THE WORK AS SPECIFIED.

THE LIMITS OF REPAIR AND ESTIMATED QUANTITIES SHOWN ON THE PLANS ARE APPROXIMATE. THE EXTENT OF REMOVAL AND REPAIR WILL BE DETERMINED IN THE FIELD BY THE ENGINEER AT THE TIME OF CONSTRUCTION (SEE SHEETS 100 & 101).

ITEM 604 - MONUMENT ASSEMBLIES, AS PER PLAN

MONUMENT ASSEMBLIES SHALL BE CONSTRUCTED IN ACCORDANCE WITH ITEM 604, AND WITH THE MODIFICATIONS NOTED HEREIN AND SHOWN ON THE PLANS.

THE CITY OF CLEVELAND WILL MARK THE LOCATIONS WHERE NEW MONUMENT BOXES ARE TO BE CONSTRUCTED. THE CONTRACTOR SHALL NOTIFY MR. FRANK CAMPERCHIOLI, PHONE NUMBER (216) 664-3427, AT LEAST THREE (3) WEEKS PRIOR TO BEGINNING THIS WORK IN ORDER TO HAVE THE LOCATIONS MARKED IN THE FIELD.

THE NEW MONUMENT BOX SHALL BE IN ACCORDANCE WITH CITY OF CLEVELAND DRAWING A-37 (INCLUDED IN THE CONSTRUCTION PLANS). THE CITY OF CLEVELAND SHALL BE RESPONSIBLE FOR REFERENCING AND SETTING THE PIN.

ITEM 604 - CATCH BASINS

NEW CATCH BASINS SHALL BE NEENAH NO. 3901-B, EAST JORDAN, DECK DRAIN FRAME AND GRATE, OR EQUAL.

NEW CATCH BASINS WILL BE USED WHERE SHOWN ON THE PLANS, AND AT OTHER LOCATIONS WHERE, AFTER CLEANING AND INSPECTION, THE EXISTING BASINS CANNOT BE REUSED IN THE OPINION OF THE ENGINEER.

PAYMENT SHALL BE MADE AT THE UNIT PRICE BID FOR ITEM 604 CATCH BASINS AND INCLUDES THE FULL COST OF ALL LABOR, MATERIALS, TOOLS, EQUIPMENT AND INCIDENTALS NECESSARY TO INSTALL THE CATCH BASIN. CONCRETE REMOVAL AND REPLACEMENT AROUND THE CATCH BASIN SHALL BE PAID FOR UNDER OTHER BID ITEMS (SEE SHEET 98 FOR DETAILS).

EUTHENICS INC.
CONSULTING ENGINEERS
CLEVELAND OHIO

REHABILITATION OF TOWER CITY BRIDGES
PROSPECT AVE., HURON ROAD,
WEST 2ND., 3RD. & 6TH. ST. VIADUCTS

GENERAL NOTES

CLEVELAND CUYAHOGA COUNTY OHIO

Made LJD	Trcd. TJ	Ckd. LJD	Rev. RAB	Revised
Date 8-5-82	Date 9-20-82	Date 10-14-82	Date 10-28-82	Sheet 15/170

GENERAL NOTES

FHWA REGION	STATE	PROJECT	
5	OHIO	M-ID99(9)	

CUYAHOGA COUNTY
HURON / PROSPECT BRIDGE

ITEM 607 - FENCE, TYPE CL (60-INCH POLYVINYL CHLORIDE COATED STEEL CHAIN LINK FENCE) AS PER PLAN

A FIVE (5') FOOT HIGH FENCE, TYPE CL SHALL BE CONSTRUCTED WHERE SHOWN ON THE PLANS. FABRIC FOR THE FENCE SHALL BE POLYVINYL-CHLORIDE-COATED GALVANIZED STEEL CHAIN LINK AND SHALL CONFORM TO ODOT ITEM 607.

THE COLOR OF THE VINYL COATING SHALL BE A UNIFORM BLACK MUNSELL COLOR No. N.1.1.7/0 AND SHALL BE HELD WITHIN THE TOLERANCES AS DETERMINED BY ASTM D-1535.

CHAIN LINK FABRIC OF 9 GAUGE (COATED WIRE SIZE), 2 INCH MESH AND SHALL HAVE A MINIMUM 7 MIL BONDED P.V.C. COATING OVER A .30 OUNCE ZINC SUBSTRATE. COATED WIRE SHALL HAVE A MINIMUM BREAKING STRENGTH OF 1,200 LBS., MEASURED ON THE WIRE BEFORE WEAVING. COLOR COATING SHALL BE APPLIED BY THE THERMAL FUSION METHOD AND SHALL BE COLOR MATCHED WITH FRAMEWORK MATERIALS.

TOP AND BOTTOM RAILS SHALL BE PROVIDED. THE TOP AND BOTTOM SELVAGES SHALL BE KNUCKLED.

FENCE POSTS SHALL BE A36 STEEL GALVANIZED 4 X 4 X 3/16 SQUARE STRUCTURAL TUBING.

TOP AND BOTTOM RAILS SHALL BE A36 STEEL GALVANIZED 4 X 2 X 3/16 RECTANGULAR STRUCTURAL TUBING WELDED TO THE FENCE POSTS.

PYRAMID CAPS FOR EACH FENCE POST SHALL BE PROVIDED. THE STEEL FRAME SHALL BE PAINTED BLACK WITH TWO PRIME COATS AND ONE FINISH COAT.

THE POSTS SHALL BE SPACED AS SHOWN ON THE PLANS AND SHALL BE SET IN AN ANCHOR SLEEVE WITH A NON-SHRINK EPOXY MORTAR FOR GROUT ANCHORING CONFORMING TO ODOT SUPPLEMENTAL SPECIFICATION 956. THE ANCHOR SLEEVES SHALL BE PROVIDED AND SET IN THE CONCRETE PARAPETS BY THE GENERAL CONTRACTOR.

PAYMENT FOR THE FENCE SHALL BE MADE AT THE CONTRACT UNIT PRICE BID PER LINEAR FOOT. PAY LENGTH SHALL BE THE OVERALL LENGTH OF FENCE AND SHALL INCLUDE THE TOTAL COST OF ALL LABOR, MATERIALS, TOOLS AND EQUIPMENT NECESSARY TO FURNISH AND INSTALL THE FENCE, GATES, LOCKS, BRACES AND APPURTENANCES.

* ITEM SPECIAL - FENCE, STEEL FRAME AND WOOD PANEL

A STEEL FRAMED FENCE WITH WOOD PANELS SHALL BE CONSTRUCTED ON THE PARAPET ON THE NW SIDE OF PROSPECT AVENUE AND ON THE NE SIDE OF HURON ROAD AS PER PLANS.

FENCE POSTS SHALL BE A36 STEEL GALVANIZED 4 X 4 X 3/16 SQUARE STRUCTURAL TUBING.

TOP AND BOTTOM RAILS SHALL BE A36 STEEL GALVANIZED 4 X 2 X 3/16 RECTANGULAR STRUCTURAL TUBING WELDED TO THE FENCE POSTS.

THE WOOD PANELS BOLTED TO THE STEEL FRAME SHALL BE 3/4" EXTERIOR GRADE PLYWOOD MEDIUM DENSITY OVERLAY WITH SMOOTH OPAQUE RESIN FIBER OVERLAY ON ONE FACE.

THE PANEL SHALL BE GROOVED AS SHOWN IN THE PLANS. THE ENDS OF ANY PANEL WHICH MUST BE CUT SHALL BE COATED WITH AN ALUMINUM EDGE SEAL (2 COATS) TO PROTECT AGAINST MOISTURE.

THE STEEL FRAME SHALL BE PAINTED WITH A BLACK PAINT WITH TWO PRIME COATS AND ONE FINISH COAT.

THE POSTS SHALL BE SPACED AS SHOWN ON THE PLANS AND SHALL BE SET IN AN ANCHOR SLEEVE WITH A NON-SHRINK EPOXY MORTAR FOR GROUT ANCHORING CONFORMING TO ODOT SUPPLEMENTAL SPECIFICATION 956. THE ANCHOR SLEEVES SHALL BE PROVIDED AND SET IN THE CONCRETE PARAPETS BY THE GENERAL CONTRACTOR.

PAYMENT FOR THE FENCE SHALL BE MADE AT THE CONTRACT UNIT PRICE BID PER LINEAR FOOT. PAY LENGTH SHALL BE THE OVERALL LENGTH OF FENCE AND SHALL INCLUDE THE TOTAL COST OF ALL LABOR, MATERIALS, TOOLS AND EQUIPMENT NECESSARY TO FURNISH AND INSTALL THE FENCE, WOOD PANELS, EXPANSION SLEEVES, PAINT AND APPURTENANCES.

ITEM SPECIAL PATCHING EXISTING CONCRETE DECK SLABS

THIS ITEM SHALL CONSIST OF FURNISHING THE NECESSARY LABOR, MATERIALS AND EQUIPMENT TO REPAIR THE EXISTING CONCRETE BRIDGE DECKS BELOW THE SIDEWALK WEARING COURSE AND ROADWAY FILL CONCRETE WHERE SHOWN ON THE PLANS OR AS DIRECTED BY THE ENGINEER. THE WORK SHALL INCLUDE THE REMOVAL OF ALL LOOSE AND UNSOUND CONCRETE, SURFACE PREPARATION, BONDING COAT AND THE MIXING, PLACING, FINISHING AND CURING OF THE CONCRETE PATCHES.

THE CONCRETE, INSOFAR AS PRACTICABLE, SHALL BE CLASS C AND SHALL BE PROPORTIONED, MIXED, PLACED AND FINISHED IN ACCORDANCE WITH ITEMS 499 AND 511, EXCEPT AS NOTED. THE SURFACE FINISH IN THE SIDEWALK AREAS SHALL HAVE A WOOD FLOAT FINISH OR BETTER FOR THE APPLICATION OF THE WATERPROOFING.

CONCRETE REMOVAL SHALL BE IN ACCORDANCE WITH THE GENERAL NOTES AND THE REQUIREMENTS HEREIN.

AREAS DESIGNATED ON THE PLANS FOR PATCHING WILL BE SUBJECT TO THE FOLLOWING PROCEDURES AFTER THE ROADWAY FILL AND SIDEWALK WEARING COURSE AND WATERPROOFING MATERIAL IS REMOVED:

1. THE EXISTING STRUCTURAL SLAB WILL BE CLEANED BY SANDBLASTING OR OTHER METHODS AS THE CONTRACTOR MAY SELECT TO REMOVE ALL EXISTING WATERPROOFING AND LOOSE AND DISINTEGRATED CONCRETE.
2. AREAS ON THE PLANS DESIGNATED FOR PATCHING SHALL BE CAREFULLY INSPECTED BY THE ENGINEER, CONSULTANT AND A REPRESENTATIVE OF THE CONTRACTOR. THE ENGINEER WILL SOUND THE DECK AND OUTLINE ALL AREAS TO BE PATCHED. SOUNDING MAY HAVE TO BE DELAYED UNTIL THE DECK IS SUFFICIENTLY DRY TO PERMIT DETECTION OF ALL AREAS OF DELAMINATION. OTHER AREAS FROM THOSE SHOWN ON THE PLANS MAY BE MARKED FOR PATCHING AFTER THE FILL CONCRETE IS REMOVED AND THE STRUCTURAL DECK EXPOSED.
3. THE AREAS OUTLINED SHALL FIRST BE SAW CUT TO A DEPTH OF 3/4" AND THEN ALL UNSOUND AND LOOSE CONCRETE SHALL BE REMOVED. IN REMOVING UNSOUND CONCRETE BE CERTAIN THE REMOVAL LIMITS EXTEND WELL INTO SOUND CONCRETE. SQUARE OR PREFERRABLY SLIGHTLY UNDERCUT SHOULDERS SHALL BE MADE AT THE EDGE OF ALL REPAIR AREAS. WHERE THE BOND BETWEEN THE CONCRETE AND A PRIMARY REINFORCING BAR HAS BEEN DESTROYED, OR WHERE MORE THAN ONE HALF OF THE PERIPHERY OF SUCH A BAR HAS BEEN EXPOSED, THE ADJACENT CONCRETE SLAB SHALL BE REMOVED TO A DEPTH THAT WILL PROVIDE A MINIMUM 3/4 INCH CLEARANCE AROUND THE BAR. CARE SHALL BE TAKEN IN WORKING AROUND REINFORCING STEEL SO AS NOT TO LOOSEN OR DAMAGE THE STEEL, OR TO SHATTER THE CONCRETE AROUND IT BEYOND THE REPAIR AREA.
4. AFTER THIS INITIAL REMOVAL THE ENGINEER WILL SOUND THE DECK AND OUTLINE FOR REMOVAL ALL OTHER AREAS OF LOOSE AND UNSOUND CONCRETE.
5. WHERE THE DECK IS SOUND FOR LESS THAN ONE-HALF OF ITS ORIGINAL DEPTH, THE CONCRETE SHALL BE REMOVED FULL DEPTH EXCEPT FOR LIMITED AREAS AS MAY BE DESIGNATED BY THE ENGINEER.
6. DETERIORATED REINFORCEMENT SHALL BE RESTORED AT LOCATIONS AS DIRECTED BY THE ENGINEER, IN THE FOLLOWING MANNER: CONCRETE SHALL BE CHIPPED AWAY TO EXPOSE A LENGTH OF SOUND BAR ON EITHER SIDE OF THE CORRODED AREA. THE BAR WILL BE SANDBLASTED IF CORRODED LESS THAN 50% OR CUT OUT IF CORRODED MORE. A NEW BAR WITH THE SAME AREAS WILL BE LAPPED EITHER SIDE OF THE CORRODED OR CUT OUT AREA. REINFORCEMENT IS INCLUDED FOR PAYMENT UNDER ITEM 509.
7. SURFACE PREPARATION - CLEANING SHALL CLOSELY PRECEDE APPLICATION OF THE BONDING GROUT. THE SURFACE TO BE PATCHED AND THE EXPOSED REINFORCING STEEL SHALL BE THOROUGHLY CLEANED BY SANDBLASTING FOLLOWED BY AN AIR BLAST. IT MAY BE NECESSARY TO USE HAND TOOLS TO REMOVE SCALE FROM THE REINFORCING STEEL. IMMEDIATELY PRIOR TO PLACING THE CONCRETE PATCH MATERIAL, THE NEWLY EXPOSED CONCRETE SURFACES SHALL BE CLEANED WITH AN AIR BLAST AND COVERED WITH A THIN COATING OF A BONDING GROUT.
8. BONDING GROUT - THE GROUT FOR BONDING SHALL CONSIST OF EQUAL PARTS BY VOLUME OF PORTLAND CEMENT AND SAND, MIXED WITH SUFFICIENT WATER TO FORM A STIFF SLURRY. THE CONSISTENCY OF THIS SLURRY SHALL BE SUCH THAT IT CAN BE APPLIED WITH A STIFF BRUSH OR BROOM TO THE EXISTING SURFACE IN A THIN, UNIFORM COATING. THE COATING OF GROUT SHALL BE SCRUBBED ONTO THE DRY SURFACE IMMEDIATELY BEFORE PLACING THE CONCRETE. CARE SHALL BE EXERCISED TO INSURE THAT NO EXCESS GROUT IS PERMITED TO COLLECT IN LOW SPOTS. IN NO CASE SHALL THE GROUT BE PERMITTED TO DRY BEFORE PLACING THE NEW CONCRETE. THINNED GROUT SHALL BE PAINTED OVER ALL JOINTS BETWEEN THE NEW AND EXISTING CONCRETE IMMEDIATELY AFTER THE FINISHING HAS BEEN COMPLETED.
9. PLACE THE CONCRETE AS SPECIFIED IN ITEM 511.
10. DECK CORE BORING HOLES WHERE SHOWN ON THE STREET SURFACE PLANS SHALL BE TREATED AND PAID FOR AS A FULL DEPTH REPAIR.
11. PATCHES LESS THAN 1 INCH DEEP SHALL BE POURED MONOLITHICALLY WITH THE FILL CONCRETE AND SHALL BE CLASS C CONCRETE. PAYMENT WILL BE MADE AT THE SQUARE FOOT PRICE BID FOR PATCHING.

CONCRETE MAY BE REMOVED BY SCARIFYING, CHIPPING OR HAND DRESSING. CHIPPING HAMMERS SHALL NOT BE HEAVIER THAN THE NOMINAL 35 POUND CLASS AND SHALL BE OPERATED AT AN ANGLE OF LESS THAN 45 DEGREES WITH RESPECT TO THE SURFACE OF THE DECK. CONCRETE SHALL BE REMOVED IN A MANNER THAT PREVENTS CUTTING, ELONGATING OR DAMAGING REINFORCING OR STRUCTURAL STEEL.

AREAS SHOWN ON THE PLANS WERE DETERMINED FROM A VISUAL INSPECTION OF THE UNDERSIDE OF THE DECK AND ARE APPROXIMATE ONLY. THE ACTUAL QUANTITY MAY VARY CONSIDERABLY FROM THAT SHOWN ON THE PLANS. PAYMENT FOR PATCHING EXISTING CONCRETE DECK SLABS WILL BE MADE FOR THE ACTUAL SQUARE FEET OF REPAIR WORK DETERMINED BY THE ENGINEER UPON COMPLETION OF EACH REPAIR. THE UNIT PRICE BID SHALL INCLUDE FULL COMPENSATION FOR THE REMOVAL OF ALL LOOSE AND DISINTEGRATED CONCRETE, THE PREPARATION OF THE SURFACE, APPLYING THE BONDING GROUT, THE PLACING OF THE CONCRETE TO THE LEVEL OF THE BOTTOM OF THE SIDEWALK WEARING COURSE OR ROADWAY FILL CONCRETE AND THE CURING OF THE CONCRETE. FOR FULL DEPTH, ONLY ONE EXPOSED SURFACE SHALL BE MEASURED FOR THE BASIS OF PAYMENT.

PAYMENT WILL BE MADE AT THE UNIT PRICE BID PER SQUARE FOOT FOR THE FOLLOWING ITEMS:

ITEM SPECIAL - PATCHING EXISTING CONCRETE DECK SLABS, LESS THAN 1" DEEP
ITEM SPECIAL - PATCHING EXISTING CONCRETE DECK SLABS, PARTIAL DEPTH
ITEM SPECIAL - PATCHING EXISTING CONCRETE DECK SLABS, FULL DEPTH

ITEM SPECIAL - CRACK REPAIR IN EXISTING CONCRETE DECK SLABS

THIS ITEM CONSISTS OF REPAIRING CRACKS IN THE EXISTING STRUCTURAL DECK BELOW THE SIDEWALK WEARING COURSE AND/OR ROADWAY FILL CONCRETE WHERE SHOWN ON THE PLANS OR AS DIRECTED BY THE ENGINEER.

ALL CONCRETE CRACK REPAIRS SHALL BE IN ACCORDANCE WITH ITEM 519 WITH THE MODIFICATIONS AND ADDITIONS DESCRIBED HEREIN. CONCRETE ADJACENT TO THE CRACK SHALL BE REMOVED BY SAWING TO INSURE A NEAT TRIM LINE. SPECIAL CARE SHALL BE TAKEN NOT TO DISTURB OR CUT THE REINFORCING BARS.

A MASTIC SEALER SIKAFLEX 406 AS MANUFACTURED BY SIKA CHEMICAL CORPORATION OR EQUAL SHALL BE PLACED AS PER DETAILS ON SHEET 54 OF THE PLANS.

PAYMENT SHALL BE MADE AT THE UNIT PRICE BID PER LINEAR FOOT OF CRACK FOR ITEM SPECIAL - CRACK REPAIR IN EXISTING CONCRETE DECK SLABS.

ITEM 607 - FENCE REBUILT AS PER PLAN

FENCE REBUILT SHALL CONFORM TO ITEM 607 WITH THE FOLLOWING MODIFICATIONS AND ADDITIONS:

1. THE FENCE ON THE NORTH SIDE OF PROSPECT AVENUE EAST OF EJ 8 SHALL BE REPLACED IN KIND. STEEL ANGLE POST REUSED SHALL BE SANDBLASTED AND PAINTED AS PER 514 - FIELD PAINTING OF EXISTING STEEL SYSTEM B. IF NEW SUPPORTS ARE TO BE USED THEY SHALL BE A36 STEEL, PAINTED AS PER ITEM 514 - FIELD PAINTING OF EXISTING STEEL SYSTEM B.
2. THE LIN. FT. UNIT PRICE BID FOR THIS ITEM SHALL INCLUDE THE FULL COST OF REBUILDING THE FENCE IN KIND AND SHALL INCLUDE THE FURNISHING OF ALL THE LABOR, MATERIALS, TOOLS AND EQUIPMENT NECESSARY TO COMPLETE THE WORK AS SPECIFIED ON THE PLANS OR DIRECTED BY THE ENGINEER.

ITEM 516 - EXPANSION JOINTS

THE WORK REQUIRED UNDER THIS ITEM CONSISTS OF FURNISHING AND INSTALLING A NEOPRENE STRIP SEAL EXPANSION JOINT AT THE TRANSVERSE BRIDGE AND LONGITUDINAL BUILDING JOINTS, IN ACCORDANCE WITH THE DETAILS SHOWN ON THE PLANS, HEREIN SPECIFIED AND/OR AS DIRECTED BY THE ENGINEER.

A. DESCRIPTION

WORK FOR THE ROADWAY AND SIDEWALK EXPANSION JOINTS INCLUDES FURNISHING AND INSTALLING ALL MATERIAL WITHIN THE EXPANSION JOINT AREA BLOCK-OUT INCLUDING THE STRIP SEAL, STRUCTURAL STEEL EXTRUSIONS AND ANCHORAGE, SIDEWALK COVER PLATE, CLASS S CONCRETE WITH TYPE K CEMENT, SEALANTS, SURFACE PRIMERS AND ALL OTHER ITEMS AS MAY BE REQUIRED TO COMPLETE THE INSTALLATION AS SHOWN ON THE PLANS OR REQUIRED HEREIN. THE 3/8 INCH A588 STEEL END DAM PLATE BELOW THE EXTRUSION IS INCLUDED FOR PAYMENT UNDER ITEM 513.

WORK FOR THE BUILDING EXPANSION JOINT INCLUDES FURNISHING AND INSTALLING THE STRIP SEAL, STEEL EXTRUSIONS, SUPPORTING ANGLES, SHIMS, BOLTS, COVER PLATE AND CLASS S CONCRETE BETWEEN THE BUILDING AND JOINT, SEALANTS, ADHESIVES, SURFACE PRIMERS AND ALL OTHER ITEMS AS MAY BE REQUIRED TO COMPLETE THE INSTALLATION AS SHOWN ON THE PLANS OR REQUIRED HEREIN.

B. MATERIALS

MATERIALS WITHIN THE EXPANSION JOINT BLOCK-OUT AREA SHALL BE IN ACCORDANCE WITH THE FOLLOWING:

1. NEOPRENE STRIP SEAL - STRIP SEALS OF THE SIZE AND CONFIGURATION SHOWN ON THE PLANS SHALL BE AN EXTRUDED NEOPRENE MATERIAL MEETING THE REQUIREMENTS OF ASTM D2678, MODIFIED FOR HARDNESS AND EXCLUSIVE OF RECOVERY TESTS. THE PHYSICAL PROPERTY REQUIREMENTS ARE AS FOLLOWS:

PHYSICAL PROPERTIES	REQUIREMENTS	ASTM METHOD
TENSILE STRENGTH, MIN PSI	2000	D 412
ELONGATION @ BREAK, MIN. PERCENT	250	D 412
HARDNESS, TYPE A DUROMETER	60±7	D 2240 (MODIFIED)
COMPRESSION SET, 70 HR @ 212°F, MAX.	40%	D 395, METHOD B. (MODIFIED)
OVEN AGING 70 HR @ 212°F	20%	D 573
TENSILE STRENGTH	20%	
ELONGATION, LOSS, MAX	20%	
HARDNESS, TYPE A DUROMETER (POINTS CHANGE)	0 TO +10	
OIL SWELL ASTM OIL 3, 70 HR @ 212°F, WEIGHT CHANGE MAX	45%	
OZONE RESISTANCE, 70 HR @ 104°F 20% STRAIN, 3000 PPHM IN AIR (WIPED WITH TOULENE TO REMOVE CONTAMINATION)	NO CRACKS	D 1149

THE STRIP SEAL SHALL CONFORM TO WABO S-300 AS MANUFACTURED BY WATSON BOWMAN, INC. OF 95 PINEVIEW DRIVE, AMHERST, NEW YORK; THE ACME STRIP SEAL AS 300 AS MANUFACTURED BY ACME HIGHWAY PRODUCTS CORPORATION, 168 CREEKSIDE DRIVE, AMHERST, NEW YORK, OR APPROVED EQUAL.

SEALS FOR THE STREET JOINTS SHALL BE FURNISHED IN ONE CONTINUOUS PIECE, FOR A MINIMUM OF TWO (2) FEET PAST THE UP TURN AT THE CURB, SEE SHEET 47 FOR DETAILS.

SEALS FOR THE SIDEWALK AND BUILDING LINE JOINTS SHALL BE SHOP VULCANIZED AT THEIR INTERSECTIONS AND DELIVERED IN A CONTINUOUS STRIP. A MINIMUM NUMBER OF FIELD FUSED JOINTS SHALL BE UTILIZED, LOCATED MID-SPAN ON BUILDING LINE JOINTS WHERE REQUIRED AS PER MANUFACTURER.

ANY CHANGES IN DIRECTION SHALL BE SHOP MITERED AND SPLICED OR INSTALLED AS RECOMMENDED BY THE MANUFACTURER.

ALL FIELD SPLICES SHALL BE ACCORDING TO MANUFACTURERS RECOMMENDATIONS UNDER SUPERVISION OF THE MANUFACTURERS REPRESENTATIVE. COMPLETED SPLICES SHALL HAVE NO OFFSETS ON THE EXTERIOR SURFACES AND AFTER INSTALLATION, THERE SHALL BE NO EVIDENCE OF BOND FAILURE AT THE SPLICES.

EACH LOT OF STRIP SEALS SHALL BE TESTED BY THE MANUFACTURER OR AN ACCREDITED LABORATORY TO INSURE COMPLIANCE WITH THESE PROVISIONS. TWO CERTIFIED COPIES OF THE QUALIFICATION TEST DATA INDICATING THAT THE TEST MATERIALS COMPLY WITH THESE PROVISIONS SHALL BE SUBMITTED TO THE ENGINEER AND CONSULTANT. SAMPLING, WHEN REQUIRED, SHALL BE IN ACCORDANCE WITH 106.03. THE SAMPLE FROM EACH LOT AND FOR EACH PROJECT SHALL BE ONE PIECE TWO FEET LONG. MATERIAL ACCEPTANCE WILL BE BASED UPON EVALUATION OF CERTIFIED TEST DATA, LABORATORY TEST OF SAMPLED MATERIAL, OR THE EVALUATION OF BOTH CERTIFIED TEST DATA AND TESTED SAMPLES.

2. STRUCTURAL STEEL EXTRUSIONS AND ANCHORS - STRUCTURAL STEEL EXTRUSIONS WITH EPOXY COATED ANCHOR STUDS SHALL BE AS DETAILED IN THE PLANS AND SHALL BE A588 STEEL. THE COVER PLATES ON THE SIDEWALK JOINT AND THE SUPPORTING ANGLES FOR THE EXTRUSIONS AT THE BUILDING JOINTS SHALL BE A588 STEEL. THE EXPOSED SURFACES OF THE SUPPORTING ANGLES AND THE SIDEWALK COVER PLATES SHALL BE FIELD PAINTED. PAINTING SHALL CONFORM TO ITEM 514 SYSTEM B - FIELD PAINTING OF NEW STRUCTURAL STEEL. FIELD PAINTING SHALL CONSIST OF TWO (2) PRIME COATS AND ONE (1) FINISH COAT.

** ITEM SPECIAL - FENCE, STEEL FRAME AND WOOD PANEL CONTINUED*
THE WOOD PANELS SHALL BE PAINTED IN ACCORDANCE WITH ITEM 514.07, PAINTING WOOD. THE COLOR SHALL BE SELECTED BY THE PROPERTY OWNER AND SUBMITTED TO THE ENGINEER PRIOR TO ANY WORK BEING DONE ON THE FENCE.

EUTHENICS INC.
CONSULTING ENGINEERS
CLEVELAND OHIO

REHABILITATION OF TOWER CITY BRIDGES
PROSPECT AVE., HURON ROAD,
WEST 2ND., 3RD. & 6TH. ST. VIADUCTS

GENERAL NOTES

CLEVELAND CUYAHOGA COUNTY OHIO

Made LJD	Trcd. TJ	Ckd. LJD	Rev. RAB	Revised 12-13-83
Date 10-1-82	Date 10-4-82	Date 10-5-82	Date 10-6-82	Sheet 16 / 170

GENERAL NOTES

FHWA REGION	STATE	PROJECT	
5	OHIO	M-ID 99 (9)	

16A
170

CUYAHOGA COUNTY
HURON / PROSPECT BRIDGE

3. CONCRETE - CLASS S CONCRETE WITH TYPE K SHRINKAGE COMPENSATING CEMENT, 701.08, SHALL BE USED IN THE BLOCKOUT AREA. THE FOLLOWING RESTRICTIONS SHALL APPLY TO THE CONCRETE IN THE BLOCKOUT AREA:
   (A) CEMENT SHALL BE EXPANSIVE HYDRAULIC CEMENT. ASTM C845, TYPE K.
   (B) THE MAXIMUM WATER/CEMENT RATIO GIVEN FOR CLASS S CONCRETE IN 499.03 SHALL BE REVISED FROM 0.44 TO 0.50.
   (C) MAXIMUM SLUMP AT THE TIME AND PLACE OF CONCRETE PLACEMENT SHALL BE 6 INCHES.
   (D) CHEMICAL ADMIXTURES, WHEN REQUIRED BY 511.06, SHALL BE LIMITED TO 705.12 TYPE D
   (E) MAXIMUM AMBIENT TEMPERATURE AT TIME OF PLACEMENT OF CONCRETE SHALL BE 80°F.
   (F) MEMBRANE CURING PER SS836 WILL NOT BE PERMITTED FOR ANY CONCRETE PLACED BETWEEN SEPTEMBER 1 AND MARCH 31. SUCH CONCRETE SHALL BE CURED BY METHOD (A) WATER CURING.
   (G) IF REQUIRED BY THE ENGINEER, THE SURFACE OF THE CONCRETE SHALL BE GIVEN A FOG SPRAY OF WATER. THIS MAY BE REQUIRED PRIOR TO EITHER WATER CURING OR MEMBRANE CURING IF WEATHER CONDITIONS DICTATE. EQUIPMENT SHALL BE ON HAND.

   THE EXPOSED CONCRETE IN THE STREET AT EACH EXPANSION JOINT SHALL RECEIVE A PROTECTIVE COATING OF A 2-COMPONENT EPOXY RESIN PENETRATING SEALER. THE PENETRATING SEALER SHALL BE APPLIED AS PER MANUFACTURERS RECOMMENDATIONS AND SHALL BE SIKAGARD 619 AS MANUFACTURED BY SIKA CHEMICAL CORPORATION, NIKLEPOXY PENETRANT SEALER PRODUCT NO. I AS MANUFACTURED BY ROCKY MOUNTAIN CHEMICAL COMPANY, P. O. BOX 2494, CASPER, WYOMING 82601, DURAL 334 AS MANUFACTURED BY DURAL INTERNATIONAL CORPORATION, DEER PARK, NEW YORK, OR AN APPROVED EQUAL.

4. BONDING GROUT - THE BONDING GROUT SHALL BE IN ACCORDANCE WITH THE MANUFACTURER'S RECOMMENDATIONS.

5. SEALANTS - JOINT SEALANTS SHALL BE DURASEAL POLYURETHANE JOINT SEALANT AS MANUFACTURED BY DURAL INTERNATIONAL CORPORATION, DEEP PARK, NEW YORK, SIKAFLEX POLYURETHANE JOINT SEALANT AS MANUFACTURED BY SIKA CHEMICAL CORPORATION, LYNDHURST, NEW JERSEY OR AN APPROVED EQUAL.
6. LUBRICANT ADHESIVES - AS RECOMMENDED BY THE STRIP SEAL MANUFACTURER.

C. INSTALLATION

A MINIMUM OF SEVEN (7) DAYS SHALL BE REQUIRED AFTER THE PLACEMENT OF THE DECK SLAB OUTSIDE THE EXPANSION JOINT AREAS BEFORE WORK IS PERMITTED WITHIN THE BLOCKOUT AREA.

THE STEEL EXTRUSION SHALL BE WELDED AS PER DETAILS IN THE PLANS. IMMEDIATELY PRIOR TO PLACING THE CONCRETE THE BLOCKOUT AREA SHALL BE CLEANED OF ALL FOREIGN MATERIAL WHICH MAY BE DETRIMENTAL TO ACHIEVING AN ADEQUATE BOND.

IMMEDIATELY FOLLOWING THE APPLICATION OF THE BONDING GROUT, THE CONCRETE SHALL BE POURED, CONSOLIDATED AND FINISHED TO THE PLAN SURFACE.

CONCRETE SHALL BE PLACED IN ACCORDANCE WITH ODOT SPECIFICATION 511.08 AND AS RECOMMENDED BY THE MANUFACTURER.

THE DECK SLAB AND SIDEWALK SHALL BE FINISHED BY METHODS APPROVED BY THE ENGINEER. THE SIDEWALK FINISH TEXTURE SHALL MATCH THAT OF THE ADJACENT SIDEWALK. CURING SHALL BE IN ACCORDANCE WITH THE MANUFACTURER'S RECOMMENDATIONS.

A MINIMUM OF TWO (2) DAYS SHALL BE REQUIRED AFTER THE BLOCKOUT CONCRETE IS PLACED TO INSTALL THE STRIP SEAL. THE STRUCTURAL STEEL EXTRUSION MUST BE CAREFULLY AND THOROUGHLY CLEANED OF ALL LOOSE GRIT AND DIRT AND KEPT DRY UNTIL THE LUBRICANT ADHESIVE IS APPLIED. THE LUBRICANT SHALL BE LIBERALLY APPLIED TO BOTH THE STEEL EXTRUSIONS IN THE CAVITY AREA AS WELL AS TO THE SIDES OF THE NEOPRENE STRIP SEAL GLAND.

CARE SHALL BE TAKEN TO SEE THAT THE LUBRICATED SIDES OF THE STRIP SEAL ARE NOT CONTAMINATED DURING INSTALLATION.

SEALS SHALL BE INSTALLED UNDER THE SUPERVISION OF THE MANUFACTURERS REPRESENTATIVE WITH EQUIPMENT DESIGNED OR SPECIFICALLY ADAPTED FOR THE INSTALLATION. A TECHNICAL REPRESENTATIVE OF THE STRIP SEAL MANUFACTURER SHALL BE PRESENT TO CONSULT WITH THE ENGINEER AND MAKE RECOMMENDATIONS AS TO THE PROPER INSTALLATION PROCEDURES.

D. SHOP DRAWINGS

PRIOR TO THE FABRICATION OR ORDERING OF MATERIAL UNDER THIS ITEM THE CONTRACTOR SHALL SUBMIT SHOP DRAWINGS FOR THE COMPLETE LAYOUT AND DETAILS OF THE ENTIRE BLOCKOUT AREA FOR BOTH THE MATERIALS FURNISHED UNDER THIS ITEM AND THE SUPPORTING MATERIAL FURNISHED UNDER ITEM 513. THE SUBMITTAL SHALL INCLUDE MATERIAL SELECTION; COMPLETE LAYOUT OF EACH JOINT, INCLUDING DIMENSIONS AND DETAILS FOR STEEL ARMORING AND ANCHORAGE, BASED ON FIELD DIMENSIONS; THE STRIP SEAL INFORMATION; AND THE METHOD OF JOINT SUPPORT DURING INSTALLATION.

E. TESTING

AFTER THE JOINT IS INSTALLED FLOOD THE DECK WITH WATER IN THE AREA OF THE JOINT TO A MINIMUM DEPTH OF 1½ INCHES FOR A MINIMUM OF TWENTY FOUR (24) HOURS TO TEST FOR LEAKAGE. IF LEAKAGE OCCURS THE CONTRACTOR SHALL LOCATE AND MAKE THE NECESSARY REPAIRS TO CORRECT THE PROBLEM WITH METHODS AS APPROVED BY THE MANUFACTURERS REPRESENTATIVE AND ENGINEER. UPON COMPLETION OF THE REPAIRS THE JOINT SHALL BE SUBJECTED TO THE INITIAL WATER TEST ONCE AGAIN.

F. MEASUREMENT

THE QUANTITY FOR EXPANSION JOINT PAYMENT SHALL BE THE ACTUAL LINEAR FEET MEASURED ALONG THE CENTERLINE OF THE JOINT, FACE TO FACE OF CURB FOR ROADWAY JOINT, FACE OF CURB TO THE BUILDING LINE FOR SIDEWALK JOINT AND ACTUAL LENGTH OF JOINT FOR BUILDING LINE JOINT.

G. PAYMENT

THE UNIT PRICE BID PER LINEAR FOOT OF ROADWAY, SIDEWALK AND BUILDING LINE EXPANSION JOINTS SHALL INCLUDE THE TOTAL COST OF ALL LABOR, EQUIPMENT, MATERIALS AND TOOLS NECESSARY TO INSTALL THE STRIP STEEL AND ALL ITEMS CONTAINED WITHIN THE EXPANSION JOINT BLOCKOUT AREAS AS SHOWN ON THE PLANS AND SPECIFIED HEREIN.

THE QUANTITY TO BE PAID FOR SHALL BE THE HORIZONTAL LENGTH OF NEOPRENE STRIP SEAL FOR EACH JOINT TYPE INSTALLED.

PAYMENT WILL BE MADE AT THE UNIT PRICE BID PER LINEAR FOOT FOR THE FOLLOWING ITEMS:

ITEM 516 - ROADWAY EXPANSION JOINTS
ITEM 516 - SIDEWALK EXPANSION JOINTS
ITEM 516 - BUILDING LINE EXPANSION JOINTS

ITEM SPECIAL - CLEANOUT, REPAIR AND PAINTING OF EXISTING DRAINAGE SYSTEM

THE EXISTING DRAINAGE SYSTEM INCLUDES ALL DRAINS COLLECTING SURFACE WATER AND TRANSPORTING IT TO THE DRAINAGE SYSTEM AT TRACK LEVEL, AND INCLUDES; CATCH BASINS, FIRE HYDRANT VAULT DRAINS, UTILITY VAULT DRAINS, MANHOLE DRAINS, EXPANSION JOINT DRAINS, HORIZONTAL PIPE CONDUCTORS AND VERTICAL DOWNSPOUTS AND ALL OTHER DRAIN PIPES AS SHOWN ON THE DRAINAGE PLANS. ALSO INCLUDED ARE THE COPPER DRAIN TUBES IN THE SUSPENDED CEILINGS AT THE EXPANSION JOINTS WHICH ARE USED AS A SECONDARY DRAINAGE SYSTEM.

THE EXISTING DRAINAGE SYSTEM, WHICH IS TO REMAIN IN PLACE, SHALL BE CLEANED, REPAIRED AND PAINTED AS INDICATED ON THE PLANS OR AS DIRECTED BY THE ENGINEER TO THE LIMITS SPECIFIED HEREAFTER:

A. ALL SURFACE DRAINAGE FACILITIES.
B. ALL EXPOSED PIPES OUTSIDE OF THE BUILDING AREA FROM TRACK LEVEL TO THE ROADWAY SURFACE.
C. ALL EXPOSED PIPES WITHIN THE PARKING GARAGE AREA IN UNITS 4 THRU 6 ON PROSPECT AVENUE.
D. WITHIN THE BUILDING AREAS THE EXISTING CURB, UTILITY AND EXPANSION JOINT DRAIN PIPES AND SECONDARY DRAINAGE SYSTEM SHALL BE CLEANED AND FLUSHED OUT TO TRACK LEVEL TO INSURE THE SYSTEM IS OPERATIVE. SMALL LENGTHS OF THE SYSTEM SHALL BE CLEANED AND PAINTED AS INDICATED ON THE PLANS OR AS DIRECTED BY THE ENGINEER.

WHERE INSULATION FROM AROUND PIPES IS LOOSE, TORN OR OTHERWISE DAMAGED THE OLD INSULATION SHALL BE REMOVED TO SOUND MATERIAL, THE PIPE CLEANED AND PAINTED AND NEW INSULATION OF SIMILAR QUALITY AS EXISTING PUT BACK.

AFTER THE NECESSARY REPAIRS HAVE BEEN MADE AND ALL DIRT, DEBRIS, ASPHALT AND ANY OTHER MATERIALS REMOVED FROM CATCH BASINS, DRAINS AND PIPES THE ENTIRE SYSTEM SHALL BE FLUSHED OUT FROM SURFACE LEVEL TO WHERE THE WATER ENTERS THE DRAINAGE SYSTEM AT TRACK LEVEL TO INSURE AGAINST LEAKS AND THAT THE WATER FLOWS FREELY. THE EXISTING SYSTEM SHALL THEN BE PAINTED. THE PAINTING SHALL CONFORM TO ITEM 514, AND THE REQUIREMENTS OF THESE SPECIFICATIONS FOR CLEANING AND PAINTING OF EXISTING STRUCTURAL STEEL.

THE LUMP SUM PRICE BID FOR THIS ITEM SHALL INCLUDE THE FULL COST OF ALL LABOR, MATERIALS, TOOLS, EQUIPMENT AND INCIDENTALS NECESSARY TO COMPLETE THE CLEANOUT, REPAIR AND PAINTING OF THE EXISTING DRAINAGE SYSTEM, AS SPECIFIED HEREIN OR AS DIRECTED BY THE ENGINEER. TO ASSIST THE CONTRACTOR IN PREPARING HIS BID THE APPROXIMATE LENGTH OF EACH SIZE PIPE TO BE CLEANED AND PAINTED IS SHOWN ON THE FRAMING PLAN SHEETS. EXISTING PIPE CALLED OUT TO BE PLUGGED AND THE REPLACEMENT OF PIPE SUPPORTS ON EXISTING PIPE THAT IS TO REMAIN SHALL BE PAID FOR UNDER THIS ITEM. PIPE WHICH MAY HAVE TO BE REPLACED SHALL BE PAID FOR UNDER THE VARIOUS 518 ITEMS. NEW AND RECONSTRUCTED CATCH BASINS WILL BE PAID FOR UNDER ITEM 604.

CONSTRUCTION, RELOCATION AND SUPPORT OF M.E.L.P. UTILITIES

THE EXISTING AND FINAL LOCATIONS AND DETAILS OF M.E.L.P. FACILITIES ARE SHOWN ON THE UTILITY PLANS. SEE SHEETS 114 THRU 123 FOR DETAILS.

CONTRACTOR'S RESPONSIBILITY AND GUARANTEE

THE CONTRACTOR HAS COMPLETE RESPONSIBILITY FOR THE CONSTRUCTION AND SERVICEABILITY OF THE TRANSVERSE AND LONGITUDINAL EXPANSION JOINTS. HE SHALL BE RESPONSIBLE FOR THE SCHEDULING AND CO-ORDINATION OF THE WORK BY THE VARIOUS SUBCONTRACTORS AND IS LIABLE FOR THEIR ACTS AND OMISSIONS.

THE CONTRACTOR SHALL GUARANTEE HIS WORK AND THAT OF HIS SUBCONTRACTORS FOR THE CONSTRUCTION OF THE EXPANSION JOINTS. THE PERIOD OF GUARANTEE SHALL BEGIN UPON THE DATE OF FINAL ACCEPTANCE BY THE DIRECTOR IN WRITING, AND SHALL CONTINUE FOR A PERIOD OF TWELVE (12) MONTHS THEREAFTER.

IF AT ANY TIME BEFORE OR DURING SAID PERIOD OF GUARANTEE THE EXPANSION JOINTS SHOW SIGNS OF LEAKING, ANY DEFECTS OR OMISSIONS BECOME APPARENT IN THE WORK, OR IF IT BECOMES APPARANT THAT ANY OF THE WORK IS NOT IN ACCORDANCE WITH THE REQUIREMENTS OF THE CONTRACT DOCUMENTS, OR IF ANY OF THE WORK CONSTRUCTED UNDER THIS CONTRACT REQUIRES REPAIRS DUE TO DEFECTS IN MATERIALS OR WORKMANSHIP, OR FOR ANY OTHER CAUSE WHICH MAY BE ATTRIBUTED TO THE WORK WHICH IS BEING DONE OR HAS BEEN DONE BY THE CONTRACTOR, ALL AS DETERMINED BY THE DIRECTOR OR HIS AUTHORIZED REPRESENTATIVE, SUCH DIRECTOR OR REPRESENTATIVE WILL NOTIFY THE CONTRACTOR TO RECTIFY SUCH DEFECTS OR OMISSIONS, OR TO MAKE THE REPAIRS SO REQUIRED.

IF THE CONTRACTOR SHALL FAIL TO BEGIN TO RECTIFY SUCH DEFECTS OR OMISSIONS OR TO START SUCH REPAIRS WITHIN FIVE (5) DAYS FROM THE DATE OF SUCH NOTIFICATION, OR IF SUCH RECTIFICATION OR REPAIR WORK IS NOT MADE IN A MANNER SATISFACTORY TO THE DIRECTOR OR TO HIS REPRESENTATIVE, THE DIRECTOR SHALL HAVE THE RIGHT TO PURCHASE ANY NECESSARY MATERIALS, RENT ANY NECESSARY TOOLS AND EQUIPMENT AND TO EMPLOY SUCH OTHER PERSON OR PERSONS AS HE MAY DEEM PROPER TO MAKE SUCH REPAIRS, AND TO PAY THE EXPENSE THEREOF OUT OF THE MONEYS THEN DUE, OR WHICH MAY THEREAFTER BECOME DUE TO THE CONTRACTOR.

IN CASE OF AN EMERGENCY THE DIRECTOR SHALL HAVE THE RIGHT TO PURCHASE ANY NECESSARY MATERIALS, RENT ANY NECESSARY TOOLS AND EQUIPMENT AND TO EMPLOY SUCH OTHER PERSON OR PERSONS AS HE MAY DEEM PROPER TO MAKE SUCH REPAIRS, AND TO PAY THE EXPENSE THEREOF OUT OF THE MONEYS THEN DUE, OR WHICH MAY THEREAFTER BECOME DUE TO THE CONTRACTOR.

IF SUCH MONEYS ARE NOT SUFFICIENT TO MEET SUCH EXPENSE, THE ADDITIONAL MONEYS SHALL BE FURNISHED BY THE CONTRACTOR, AND IF HE REFUSES OR NEGLECTS TO PROVIDE THE NECESSARY MONEYS, THEY SHALL BE PROVIDED BY HIS SURETIES.

IF IT IS NECESSARY TO REMOVE ANY PART OF THE WORK TO RECTIFY DEFECTS OR OMISSIONS OR TO REPAIR DEFECTS IN MATERIALS OR WORKMANSHIP, OR IF ANY PART OF THE WORK BECOMES DAMAGED DUE TO SUCH RECTIFICATION OR REPAIRING. ALL SUCH SHALL BE REPLACED OR REPAIRED, ALL TO THE SATISFACTION OF THE DIRECTOR OR SAID REPRESENTATIVE THE GUARANTEE PROVISIONS SHALL ALSO APPLY TO ALL RECTIFIED OR REPAIRED WORK.

ITEM SPECIAL - MEMBRANE WATERPROOFING.

DESCRIPTION - THIS ITEM SHALL CONSIST OF FURNISHING THE NECESSARY LABOR, MATERIALS AND EQUIPMENT TO PREPARE THE SURFACE, WATERPROOF AND PROTECT BRIDGE DECKS AND SIDEWALK AREAS AS SHOWN ON THE PLANS AND NOTED HEREIN. THE EXISTING WATERPROOFING UNDER THE SIDEWALK WEARING SURFACE AND FILL CONCRETE IN THE ROADWAY SHALL BE COMPLETELY REMOVED.

MATERIALS - SEE WATERPROOFING SYSTEMS, APPLICATION OF MATERIAL AND PROTECTION OF MEMBRANE.

WATERPROOFING SYSTEMS - THE CONTRACTOR MAY USE ANY OF THE FOLLOWING SYSTEMS:

1. GILSABIND MEMBRANE NO. 5, 90 MILS THICK WITH A PROTECTIVE COVER.
2. NEA 4000 HT, 80 MILS THICK WITH A PROTECTIVE COVER. (HT INDICATES HIGH TEMPERATURE MATERIAL. SUPERSEAL 4000 HT AND WABO 4000 HT ARE EQUAL TO NEA 4000 HT)
3. UNIROYAL MEMBRANE 125, 125 MILS THICK WITH A PROTECTIVE COVER. (THIS SYSTEM FORMERLY DESIGNATED UNIROYAL MEMBRANE 6125).
4. OWENS/CORNING ROADBOND MEMBRANE, 90 MILS THICK WITH A PROTECTIVE COVER.

COMPANY ADDRESSES

GILSABIND
THE GILSABIND CO.
SPOKANE, WA 99208

NEA
POSH CHEMICAL, INC.
17 MATINECOCK AVE
PORT WASHINGTON, NY 11050

SUPERSEAL
SUPERIOR PRODUCTS CO.
833 47TH AVE.
OAKLAND, CA 94601

WABO
WATSON-BOWMAN
ASSOCIATES, INC.
1280 NIAGRA ST.
BUFFALO, NY 14213

UNIROYAL
UNIROYAL, INC.
303 EAST OHIO ST.
CHICAGO, ILL 60611

ROADBOND
HIGHWAY SYSTEMS GROUP,
OWENS-CORNING FIBER-
GLASS CORP.
P. O. BOX 415
GRANVILLE, OH 43023

COMMON PROCEDURES, REQUIREMENTS AND RESTRICTIONS - THE FOLLOWING SHALL APPLY TO ALL SYSTEMS:

SAFETY PRECAUTIONS - ALL SAFETY AND HANDLING MEASURES AS RECOMMENDED BY THE MANUFACTURER SHALL BE OBSERVED.

CERTIFICATION - THE MANUFACTURER OF PROPRIETARY MATERIALS SHALL CERTIFY THAT THE MATERIAL FURNISHED IS EQUAL TO MATERIAL PREVIOUSLY USED ON PROJECTS EVALUATED BY ODOT AND RECOMMENDED FOR CONTINUED USE. CERTIFICATION SHALL BE FURNISHED BEFORE THE MEMBRANE IS APPLIED. THE ENGINEER MAY REQUIRE SAMPLING FOR TESTING PURPOSES AS DIRECTED BY THE LABORATORY.

STORAGE - STORAGE OF MATERIALS SHALL BE IN ACCORDANCE WITH THE MANUFACTURER'S RECOMMENDATIONS.

SURFACE PREPARATION - PRIOR TO PLACEMENT OF THE MEMBRANE, THE DECK SURFACE SHALL BE CLEAN, SOUND AND FREE OF PROTRUSIONS AND HOLES, EXCEPT THAT SMALL HOLES IN EXISTING DECKS DUE TO POP-OUTS MAY REMAIN. OIL DEPOSITS SHALL BE SCRUBBED OFF USING WATER AND DETERGENT AND POWER OR PUSH BROOMS. THE RESIDUE SHALL BE THOROUGHLY FLUSHED FROM THE SURFACE. IF RECOMMENDED BY THE MEMBRANE MANUFACTURER, THE DECK SHALL BE LIGHTLY SANDBLASTED. IMMEDIATELY PRIOR TO MEMBRANE APPLICATION, THE DECK SHALL BE AIR BLOWN CLEAN.

MEMBRANE HEATING - AN OIL HEATED DOUBLE JACKETED KETTLE SHALL BE USED FOR HEATING THE MEMBRANE. THE KETTLE SHALL BE ESSENTIALLY FREE FROM OTHER MATERIALS. WHILE IT IS NOT NECESSARY THAT A KETTLE BE CLEANED DOWN TO BARE METAL, ANY OBVIOUS BUILDUP SHALL BE SCRAPED OUT. A KETTLE THAT ALLOWS THE MEMBRANE TO BE IN DIRECT CONTACT WITH ITS FLUE SHALL NOT BE USED. TO FACILITATE HEATING AND AVOID OVERHEATING, THE MEMBRANE SHALL BE CIRCULATED OR AGITATED DURING THE HEATING PROCESS.

WEATHER AND MOISTURE LIMITATIONS - THE MEMBRANE SHALL BE APPLIED ONLY DURING DRY WEATHER WHEN THE DECK AND AMBIENT AIR TEMPERATURES ARE AT LEAST 38° F AND RISING.

WATERPROOFING OF CURB FACES - THE MEMBRANE SHALL BE APPLIED ON THE PREPARED CURB FACES TO A POINT ONE-HALF INCH ABOVE THE TOP OF THE PROPOSED BITUMINOUS SURFACE COURSE. THE CUT-OFF POINT SHALL BE A NEAT STRAIGHT LINE.

JOINTS - A PLY OF MATERIAL SHALL BE PLACED OVER LONGITUDINAL JOINTS THAT ARE DESIGNATED ON THE PLANS. IT SHALL BE LAID TO EXTEND AT LEAST NINE (9) INCHES ON EACH SIDE OF ALL JOINTS. THE MATERIAL SHALL BE WATERPROOFING FABRIC 711.24, ROLL ROOFING AS SPECIFIED HEREIN OR NON-WOVEN FABRIC AS PERMITTED FOR PROTECTION OF THE MEMBRANE AND IT SHALL BE LEFT PRACTICALLY UNBONDED TO THE CONCRETE SURFACE; OR, THE MATERIAL SHALL BE HIGH STRENGTH WOVEN FIBERGLASS REINFORCEMENT (24 OZ./SQ. YD) INCORPORATED INTO THE HOT APPLIED LIQUID.

EUTHENICS INC.
CONSULTING ENGINEERS
CLEVELAND OHIO

REHABILITATION OF TOWER CITY BRIDGES
PROSPECT AVE., HURON ROAD,
WEST 2ND., 3RD. & 6TH. ST. VIADUCTS

GENERAL NOTES

CLEVELAND CUYAHOGA COUNTY OHIO

Mode LJD	Trcd. TJ	Ckd. LJD	Rev. RAB	Revised
Date 8-3-82	Date 8-5-82	Date 9-21-82	Date 10-7-82	Sheet 16A/170

GENERAL NOTES

APPLICATION OF MATERIAL - THE CONTRACTOR SHALL CHECK AND CONTROL THE RATE OF APPLICATION OF THE MEMBRANE MATERIAL EITHER BY APPLYING MEASURED INCREMENTS OR BY PROGRESSIVE THICKNESS MEASUREMENTS SUPPLEMENTED BY MEASUREMENT OF THE TOTAL QUANTITY APPLIED. THE SYSTEMS SHALL BE APPLIED AS FOLLOWS:

GILSABIND - THE TACK COAT (MANUFACTURER'S DEFINITION) PER MANUFACTURER'S RECOMMENDATION SHALL BE APPLIED TO THE PAVEMENT AT THE RATE OF 0.05 GALLONS PER SQUARE YARD. UNDER USUAL PAVING WEATHER CONDITIONS THE TACK COAT WILL BE DRY AND READY FOR MEMBRANE APPLICATION IN ONE HOUR. THE TACK COAT SHALL NOT BE APPLIED WHEN A STORM IMPENDS. IF THE TACK COAT HAS BECOME CONTAMINATED THE DECK SHALL BE CLEANED AND A NEW TACK COAT SHALL BE APPLIED AND ALLOWED TO CURE BEFORE THE MEMBRANE IS APPLIED. THE MEMBRANE, MEMBRANE NO. 5, SHALL BE HEATED TO A TEMPERATURE NOT EXCEEDING 400° F. THE HEATING OIL TEMPERATURE SHALL NOT EXCEED 550° F.
THE APPLICATION TEMPERATURE SHALL BE BETWEEN 350° F AND 375° F. ANY MATERIAL THAT HAS BEEN HEATED TO A TEMPERATURE ABOVE 400° F SHALL BE REJECTED. THE MEMBRANE SHALL BE APPLIED EVENLY AT THE RATE OF 0.47 POUNDS PER SQUARE FOOT WHICH YIELDS A 90 MIL NOMINAL THICKNESS.

NEA 4000 HT - THE MEMBRANE SHALL BE SUPPLIED IN LIQUID FORM AND POURED OR PUMPED INTO THE KETTLE. THE MEMBRANE SHALL BE HEATED TO 370° F AND POURED ONTO THE CLEANED CONCRETE SURFACE AND DISTRIBUTED WITH AN 18" WIDE SILICONE RUBBER SQUEEGEE TO AN 80 MIL NOMINAL THICKNESS WITHIN A RANGE OF 70 TO 90 MILS. MOISTURE IN THE CONCRETE MAY CAUSE SOME BUBBLES IN THE HOT APPLIED MEMBRANE; THESE SHALL BE ELIMINATED BY THE SQUEEGEE WHILE THE MATERIAL IS IN A HOT LIQUID STAGE PRIOR TO APPLICATION OF THE PROTECTIVE COVERING.

UNIROYAL - PRIOR TO APPLICATION OF THE MEMBRANE MATERIAL, APPROVED SURFACE CONDITIONER SHALL BE APPLIED AT A RATE OF 0.015 TO 0.03 GALLONS PER SQUARE YARD DEPENDING ON THE CONCRETE SURFACE. THE CONDITIONER SHALL BE PROTECTED FROM RAIN AND FROST UNTIL DRY. CAKES OF MEMBRANE SHALL BE MELTED UNTIL THE MATERIAL CAN BE DRAWN FREE FLOWING AND LUMP FREE FROM THE KETTLE AT A TEMPERATURE NOT EXCEEDING 425° F. THE MEMBRANE SHALL BE APPLIED EVENLY AT THE RATE OF 0.67 POUNDS PER SQUARE FOOT WHICH YIELDS A 125 MIL NOMINAL THICKNESS.

ROADBOND - ROADBOND X-100 PRIMER SHALL BE USED FOR THE PRIME COAT TO REDUCE "PIN-HOLING". IT SHALL BE APPLIED, PER THE MANUFACTURER'S RECOMMENDATIONS, AT A RATE OF 0.04 GALLONS PER SQUARE YARD (1.0 GALLON PER 225 SQUARE FEET). UNDER USUAL PAVING WEATHER CONDITIONS THE PRIMER WILL BE DRY AND READY FOR MEMBRANE APPLICATION IN 30 MINUTES. THE PRIMER SHALL BE CONSIDERED DRY WHEN IT CHANGES FROM A GLOSSY TO A DULL APPEARANCE AND FEELS NON-TACKY TO THE TOUCH. IT SHALL NOT BE APPLIED WHEN A STORM IMPENDS. IF THE PRIMER HAS BECOME CONTAMINATED, THE DECK SHALL BE CLEANED AND NEW PRIMER SHALL BE APPLIED AND ALLOWED TO DRY BEFORE THE MEMBRANE IS APPLIED.

THE HEATING OIL TEMPERATURE SHALL NOT EXCEED 550° F. BAGGED ROADBOND SHALL BE REMOVED FROM CARTONS AND ADDED TO THE KETTLE. MATERIAL SHALL NOT BE REMOVED FROM THE BAGS SINCE THEY WILL SAFELY MELT WITH THE BATCH.
THE APPLICATION TEMPERATURE SHALL BE 375° F + 25° F. ANY MATERIAL THAT HAS BEEN HEATED TO A TEMPERATURE ABOVE 400° F SHALL BE REJECTED.
THE MATERIAL SHALL BE APPLIED WITH A LONG-HANDLED, RUBBER-EDGED SQUEEGEE. THE MATERIAL SHALL BE APPLIED AT THE RATE OF 0.47 POUNDS PER SQUARE FOOT (0.5 GALLONS PER SQUARE) WHICH YIELDS A 90 MIL NOMINAL THICKNESS. ROADBOND SHALL NOT BE STORED AT A TEMPERATURE ABOVE 250° F FOR MORE THAN 24 HOURS SINCE THIS MAY RESULT IN DEGRADATION OF PROPERTIES.

PROTECTION OF MEMBRANE - PROTECTION BOARD 1/8" IN THICKNESS AND COMPOSED OF LAMINATED ASPHALT SANDWICHED BETWEEN MULTIPLE LAYERS OF ONLY SUPERSATURATED ASBESTOS OR ASPHALTIC FELTS WITH MICA ON AT LEAST ONE SURFACE, AS SUPPLIED BY W.R. MEADOWS, INC., J & P PETROLEUM PRODUCTS, INC., OR AN APPROVED EQUAL SHALL BE USED AS A PROTECTIVE COVER FOR THE WATERPROOFING OVER THE ROADWAY DECK. ROLL ROOFING SHALL BE USED AS A PROTECTIVE COVER FOR THE MEMBRANE IN THE SIDEWALK AREAS. THE ROOFING SHALL CONFORM TO ASTM D224 TYPE II, EXCEPT THAT PROVISIONS PERTAINING TO ROOFING APPLICATIONS ARE WAIVED. ACCEPTANCE MAY BE BASED ON CERTIFICATION BY THE ROLL ROOFING MANUFACTURER THAT THE MATERIAL CONFORMS TO THE ABOVE REQUIREMENTS. IMMEDIATELY FOLLOWING APPLICATION OF THE MEMBRANE, BEFORE IT COOLS AND BEFORE ANY VEHICLE OR FOOT TRAFFIC IS ALLOWED ON IT THE ENTIRE WATERPROOFED DECK AND SIDEWALK SHALL BE COVERED WITH THE PROTECTION SYSTEM.
ROOFING SHALL BE LAID PARALLEL TO THE CENTERLINE OF THE BRIDGE ROADWAY UNLESS ANOTHER PROCEDURE IS APPROVED BY THE ENGINEER. THE ROOFING STRIPS WILL NOT BE REQUIRED TO OVERLAP AT EITHER LONGITUDINAL OR TRANSVERSE JOINTS. THE MAXIMEM ALLOWABLE SPACE BETWEEN ADJOINING SECTIONS OF ROOFING SHALL BE ONE-QUARTER INCH. THE ENTIRE ROOFING APPLICATION SHALL BE FREE OF WRINKLES, BUBBLES AND OTHER PLACEMENT DEFECTS. FOLLOWING PLACEMENT OF THE ROOFING, A BEAD OF THE HOT MEMBRANE SHALL BE RUN ALONG THE JOINT WHERE THE PROTECTION BOARD MEETS THE ROOFING MATERIAL AT THE CURB LINE. THE BEAD SHALL FILL THE VOIDS THUS PREVENTING WATER FROM ENTERING BETWEEN THE PROTECTION SYSTEM AND THE MEMBRANE.

THE CONTRACTOR SHALL BE RESPONSIBLE FOR MAINTAINING THE CONDITION OF THE 1/8" PROTECTIVE BOARD AND ROLL ROOFING UNTIL IT IS COVERED WITH PAVEMENT. PUBLIC TRAFFIC WILL NOT BE ALLOWED. ONLY RUBBER-TIRED VEHICLES NECESSARY FOR CONSTRUCTION WILL BE ALLOWED EXCEPT THAT A TRACK-MOUNTED MECHANICAL SPREADER WITH SMOOTH PADS WILL BE ALLOWED WHEN, IN THE OPINION OF THE ENGINEER, IT CAN BE USED WITHOUT DAMAGE. SLOW MOVING VEHICLES DO NOT DAMAGE THE PROTECTION BOARD, ROLL ROOFING OR MEMBRANE; HOWEVER, SUDDEN STOPS/STARTS SHALL BE AVOIDED.

IN LIEU OF ROLL ROOFING, PAVING GRADE PETROMAT WHICH IS MANUFACTURED BY PHILLIPS FIBERS CORPORATION, MIRAFI 140 FABRIC WHICH IS MANUFACTURED BY THE CELANESE CORPORATION OR ANY OTHER COVERING WHICH IS APPROVED BY THE DIRECTOR MAY BE USED. PLACEMENT REQUIREMENTS FOR ALTERNATE COVERINGS SHALL BE THE SAME AS THOSE FOR ROLL ROOFING. ~~EITHER 702.01 OR 702.04 ASPHALT CEMENT SHALL BE USED AS A TACK COAT ON THE PETROMAT TO BOND THE ASPHALT CONCRETE OVERLAY TO IT.~~ IF A TACK COAT IS REQUIRED FOR MIRAFI 140 OR ANY OTHER ALTERNATE PROTECTIVE COVER, IT SHALL BE ACCORDING TO RECOMMENDATIONS OF THE MANUFACTURER.

PAVING TEMPERATURE - THE BITUMINOUS OVERLAY PAVING TEMPERATURES SHALL BE AS FOLLOWS: GILSABIND, UNIROYAL AND ROADBOND, 325° F; NEA 4000 HT, 235° F MIN. AND 265° F MAX.

MANUFACTURER'S REPRESENTATIVE - FOR ALL SYSTEMS THE MANUFACTURER'S TECHNICAL REPRESENTATIVE SHALL BE NOTIFIED IN ORDER THAT HE CAN PROVIDE THE ENGINEER WITH RECOMMENDED PROCEDURES AND HE SHALL ALSO BE PRESENT DURING THE INITIAL INSTALLATION UNLESS HIS PRESENCE IS WAIVED BY THE ENGINEER. OPERATIONS AND PROCEDURES WHICH ARE CONSIDERED BY THE REPRESENTATIVE AS BEING DETRIMENTAL TO THE INTEGRITY OF THE MEMBRANE WILL NOT BE PERMITTED.

METHOD OF MEASUREMENT - THE QUANTITY SHALL BE THE ACTUAL AREA IN SQUARE YARDS OF HORIZONTAL BRIDGE DECK AND SIDEWALK COVERED WITH MEMBRANE, COMPLETED IN PLACE AND ACCEPTED.

BASIS OF PAYMENT - THE ACCEPTED QUANTITIES OF WATERPROOFING WILL BE PAID FOR AT THE CONTRACT UNIT PRICE PER SQUARE YARD, WHICH PRICE AND PAYMENT SHALL BE FULL COMPENSATION FOR PREPARING THE EXISTING SURFACE AND FURNISHING AND PLACING ALL MATERIALS, INCLUDING THE PROTECTIVE COVERING FOR THE MEMBRANE TOGETHER WITH THE TACK COAT WHEN REQUIRED.
PAYMENT WILL BE MADE UNDER: ITEM - SPECIAL; UNIT - SQUARE YARD; DESCRIPTION - MEMBRANE WATERPROOFING.

SPECIAL EASEMENT CONDITIONS

GENERAL REQUIREMENTS

THE LIMITS OF THE ACCESS DRIVE FROM CANAL ROAD TO THE 52 LEVEL WORK AREA SHALL BE STAKED OUT IN THE FIELD.

THE CONTRACTOR MAY USE THIS DRIVE TO TRAVEL TO AND FROM THE WORK AREA TO HAUL EQUIPMENT AND SUPPLIES.

THE CONTRACTOR MAY NOT PARK ANY VEHICLES IN THE DRIVE OR STORE ANY EQUIPMENT OR SUPPLIES IN THE DRIVE. THE DRIVE MUST BE KEPT OPEN TO ALLOW ACCESS TO AND FROM THE PARKING LOT. THE CONTRACTOR SHALL BE REQUIRED TO CONFINE ALL OF HIS VEHICLES, CONSTRUCTION OR OTHER, TO THE WORK AREAS OUTLINED IN THE SPECIAL WORK AGREEMENTS OR TO DESIGNATED PARKING AREAS AGREED UPON WITH PROPERTY OWNERS. NO VEHICLES OF CONTRACTORS SHALL BE PERMITTED TO BE DRIVEN OR PARKED OUTSIDE OF THESE DESIGNATED AREAS.

ANY AREA IN THE 52 LEVEL WHERE WORK IS BEING DONE ON THE BRIDGE STRUCTURE ABOVE SHALL BE BARRICADED AND SIGNED TO KEEP BOTH VEHICLES AND PEDESTRIANS OUT AND AWAY FROM POSSIBLE FALLING MATERIALS.

IF THE CONTRACTOR DAMAGES ANY PORTION OF THE ACCESS DRIVE OR ANY AREAS OF THE PAVED PARKING LOT HE MUST BARRICADE THE DAMAGED AREA FROM PEDESTRIAN AND VEHICULAR TRAFFIC DURING REPAIR AND REPAIR THE AREA AS SOON AS PRACTICAL.

WORK IN THE VICINITY OF THE PARKING LOT AREAS AT THE 52, 72.5 AND 100 LEVELS SHALL BE LIMITED DURING THE MORNING AND EVENING RUSH HOURS, 7:00 A.M. TO 9:00 A.M. AND 4:00 P.M. TO 6:00 P.M. SO THE FLOW OF VEHICULAR TRAFFIC IS NOT IMPEDED.

THE CONTRACTOR MUST PROVIDE FOR THE UNINTERRUPTED FLOW OF PEDESTRIAN AND VEHICULAR TRAFFIC THROUGH THE CAB STAND AREA AT THE 72.5 LEVEL. THE CONTRACTORS METHOD OF PROVIDING FOR THIS MOVEMENT MUST BE SUBMITTED TO THE ENGINEER FOR HIS APPROVAL PRIOR TO BEGINNING ANY WORK IN OR OVER THE AREA.

SPECIAL REQUIREMENTS - RTA

1. ALL WORK OVER RTA TRACKS OR FACILITIES MUST HAVE ADEQUATE PROTECTION AGAINST FALLING OBJECTS. INTERMEDIATE LEVEL FLOORS FULFILL THIS REQUIREMENT.
2. WORK AT TRACK LEVEL *that does not interfere with G.C.R.T.A.'s train operations can be performed at any time. Work that requires G.C.R.T.A. to single track shall be performed between the hours of 7:30 P.M. and 4:00 A.M. Monday through Thursday and/or between the hours of 7:30 P.M. Friday and 4:00 A.M. Monday. All tracks and facilities must be restored to full use after each work period. With specific regard to the drain repair, the flow from the drain must be maintained and may not drain on the platform or tracks except during work periods.*

Revised 12-19-83

EUTHENICS INC.
CONSULTING ENGINEERS
CLEVELAND OHIO

REHABILITATION OF TOWER CITY BRIDGES
PROSPECT AVE., HURON ROAD,
WEST 2ND., 3RD. & 6TH. ST. VIADUCTS

GENERAL NOTES

CLEVELAND CUYAHOGA COUNTY OHIO

Mode LJD	Trcd. TJ	Ckd. LJD	Rev. RAB	Scale:
Date 8-2-82	Date 9-20-82	Date 10-14-82	Date 10-24-82	Sheet 16B/170

GENERAL NOTES

FHWA REGION	STATE	PROJECT	
5	OHIO	M-1D99(9)	

16C
170

CUYAHOGA COUNTY
HURON / PROSPECT BRIDGE

SPECIAL EASEMENT CONDITIONS

GENERAL

THE FOLLOWING SPECIAL REQUIREMENTS PERTAIN TO SPECIFIC PROPERTIES IDENTIFIED BY PARCEL NUMBERS. THE PARCELS CAN BE IDENTIFIED IN THE RIGHT-OF-WAY PLANS, SHEETS 155 THRU 170.

CONTRACTOR NOTICE:

THE SPECIAL RESTRICTIONS IN THESE NOTES RELATED TO SCHEDULING WORK IN THE VICINITY OF AND MAINTAINING ACCESS TO THE VARIOUS ABUTTING PROPERTIES SHALL NOT BE MODIFIED WITHOUT PRIOR COORDINATION AND AGREEMENT BY THE AFFECTED PROPERTY OWNERS AND THE ENGINEER.

PROPERTY OWNER NOTICE:

PERTAINING TO ALL PROPERTY OWNERS IN THE PROJECT AREA THE CONTRACTOR SHALL PROVIDE EACH OWNER WITH A WRITTEN TIME SCHEDULE INDICATING WHEN HE WILL BE WORKING IN SPECIFIC AREAS AND FOR HOW LONG. THE CONTRACTOR SHALL PROVIDE THE OWNER WITH AT LEAST FOURTEEN (14) DAYS NOTICE BEFORE BEGINNING WORK IN ANY PORTION OF THE PROJECT AREA. THE OWNER AND CONTRACTOR SHALL MUTUALLY AGREE UPON A PLAN OF DESIGNATED ENTRANCE AND EXIT POINTS FOR HAULING MATERIALS, SUPPLIES AND EQUIPMENT TO THE VARIOUS PORTIONS OF THE WORK AREAS BEFORE BEGINNING ANY WORK.

PARCEL 10-100-WA

1. AREA IS LOCATED ON THE RAMP OFF WEST 6TH STREET TO THE PARKING AREA AT THE 72.5 LEVEL. SEE SHEETS 162 AND 166.
2. SPECIFIC RESTRICTIONS:
   - A. ANY WORK BY CONTRACTOR ON THE ENTRANCE AND EXIT RAMPS TO THE PARKING AREA MUST BE PERFORMED IN SUCH A MANNER SO AS NOT TO TOTALLY PREVENT INGRESS TO OR EGRESS FROM THE PARKING AREA TO WEST 6TH STREET. CONSTRUCTION WORK OR MOVEMENT OF CONSTRUCTION VEHICLES AND EQUIPMENT IN THE WORK AREA SHALL BE PERFORMED DURING THE MORNING OR EVENING RUSH HOURS (7:00-9:00 A.M. AND 4:00-6:00 P.M.) IN SUCH A MANNER SO AS NOT TO UNREASONABLY INTERFERE WITH THE INCOMING AND OUTGOING VOLUME OF VEHICULAR AND PEDESTRIAN TRAFFIC.
   - B. IF CONSTRUCTION WORK NECESSITATES THAT INCOMING TRAFFIC TO THE PARKING AREA BE RE-ROUTED AROUND ITS NORMAL MEANS OF INGRESS OVER VEHICLE DETECTORS, CONTRACTOR AGREES, AT OWNER'S EXPENSE, TO RELOCATE ANY SUCH VEHICLE DETECTORS IN THE RELOCATED MEANS OF INGRESS TO THE PARKING AREA PRIOR TO ANY SUCH RE-ROUTING OF INCOMING TRAFFIC. THE ESTIMATED EXPENSE OF SUCH VEHICLE DETECTOR RELOCATION SHALL BE SUBMITTED TO THE OWNER FOR ITS APPROVAL PRIOR TO THE WORK BEING PERFORMED BY THE CONTRACTOR. IF OWNER SHOULD DISAPPROVE SUCH EXPENSE, OWNER SHALL BE RESPONSIBLE FOR SUCH RELOCATION AT ITS EXPENSE IN A MANNER SATISFACTORY TO THE CONTRACTOR AND IN ACCORDANCE WITH THE CONTRACTOR'S CONSTRUCTION SCHEDULE. IF OWNER HAS NOT ACTED TO APPROVE OR DISAPPROVE THE SUBMITTED ESTIMATED EXPENSE WITHIN FIVE (5) WORKING DAYS FOLLOWING SUBMISSION, OWNER SHALL BE DEEMED TO HAVE APPROVED SUCH EXPENSE.
   - C. CONTRACTOR SHALL BE PERMITTED TO REMOVE AND/OR RELOCATE GUARDRAILS OR OTHER BARRIERS BETWEEN THE INGRESS AND EGRESS RAMPS TO AND FROM THE PARKING AREA AND WEST 6TH STREET SO AS TO FACILITATE ACCESS BY CONSTRUCTION VEHICLES OR FOR THE PURPOSE OF RE-ROUTING INCOMING OR OUTGOING TRAFFIC PROVIDED THAT CONTRACTOR RESTORE AND REPLACES THE GUARDRAILS OR BARRIERS TO THEIR PREVIOUS CONDITION WHEN WORK IS COMPLETED IN THE WORK AREA.
   - D. IF TRAFFIC REDIRECTION IS NECESSITATED DURING PERFORMANCE OF THE CONSTRUCTION WORK, CONTRACTOR SHALL PROVIDE INFORMATIONAL AND REDIRECTIONAL SIGNAGE TO CLEARLY INFORM AND REDIRECT INCOMING AND OUTGOING VEHICULAR TRAFFIC. ALL SIGNS SHALL CONFORM TO THE UNIFORM CODE OF SIGNING STANDARDS AS SET FORTH IN THE OHIO MANUAL OF UNIFORM TRAFFIC CONTROL DEVICES FOR STREETS AND HIGHWAYS.
   - E. CONTRACTOR SHALL NOT BE PERMITTED TO PARK OR STORE ANY EQUIPMENT OR VEHICLES (CONSTRUCTION OR OTHERWISE) IN ANY PORTION OF THIS WORK AREA.

PARCEL 10C-100-WA

1. THE AREA IS ON THE SOUTH SIDE OF HURON ROAD THE JOINT DRIVE RAMP DOWN TO THE 72.5 AND 52.0 LEVELS.
2. SPECIAL RESTRICTIONS: CONSTRUCTION WORK AND THE MOVEMENT OF EQUIPMENT AND/OR VEHICLES IN THE WORK AREA SHALL BE LIMITED DURING THE MORNING AND EVENING RUSH HOURS TO 7:00-9:00 A.M. AND 4:00-6:00 P.M. SO AS NOT TO UNREASONABLY IMPEDE OR INTERFERE WITH INCOMING OR OUTGOING FLOW OF VEHICULAR TRAFFIC.

PARCEL 10F-100-WA

1. PARKING LOT DRIVE OFF OF PROSPECT BETWEEN WEST 2ND STREET AND WEST 3RD STREET (SEE SHEET 156) SHALL BE REPAIRED IN PHASES AS SHOWN ON SHEETS 4A AND 5.
2. SPECIAL RESTRICTIONS: AT LEAST ONE-HALF (1/2) (FROM EAST TO WEST) OF THE DRIVEWAY FROM THE PARKING AREA ("DRIVEWAY") MUST BE OPEN AND ACCESSIBLE AT ALL TIMES SO AS TO PERMIT FREE PASSAGE OF VEHICULAR AND PEDESTRIAN TRAFIC BETWEEN THE PARKING AREA AND PROSPECT AVENUE. CONSTRUCTION WORK OR MOVEMENT OF CONSTRUCTION VEHICLES AND EQUIPMENT SHALL BE PERFORMED IN THE ACCESS AREA DESCRIBED ABOVE DURING THE MORNING OR EVENING RUSH HOURS (7:00-9:00 A.M. AND 4:00-6:00 P.M.) SO AS NOT TO INTERFERE UNREASONABLY WITH THE INCOMING AND OUTGOING VOLUME OF TRAFFIC.

   IF CONSTRUCTION WORK NECESSITATES THAT INCOMING TRAFFIC TO THE PARKING AREA BE RE-ROUTED AROUND ITS NORMAL MEANS OF INGRESS OVER VEHICLE DETECTORS, CONTRACTOR AGREES, AT OWNER'S EXPENSE, TO RELOCATE VEHICLE DETECTORS IN THE RELOCATED MEANS OF INGRESS TO THE PARKING AREA PRIOR TO ANY SUCH RE-ROUTING OF INCOMING TRAFFIC. THE ESTIMATED EXPENSE OF SUCH VEHICLE DETECTOR RELOCATION SHALL BE SUBMITTED TO THE OWNER FOR ITS APPROVAL PRIOR TO THE WORK BEING PERFORMED BY THE CONTRACTOR. IF OWNER SHOULD DISAPPROVE SUCH EXPENSE, OWNER SHALL BE RESPONSIBLE FOR SUCH RELOCATION AT ITS EXPENSE IN A MANNER SATISFACTORY TO THE CONTRACTOR AND IN ACCORDANCE WITH THE CONTRACTOR'S CONSTRUCTION SCHEDULE. IF OWNER HAS NOT ACTED TO APPROVE OR DISAPPROVE THE SUBMITTED ESTIMATED EXPENSE WITHIN FIVE (5) WORKING DAYS FOLLOWING SUBMISSION, OWNER SHALL BE DEEMED TO HAVE APPROVED SUCH EXPENSE.

   CONTRACTOR SHALL PROVIDE INFORMATIONAL AND DIRECTIONAL SIGNAGE TO INFORM AND REDIRECT PARKING AREA PATRONS TO THE RE-ROUTED AREA. ALL SIGNS SHALL CONFORM TO THE UNIFORM CODE OF SIGNING STANDARDS AS SET FORTH IN THE OHIO MANUAL OF UNIFORM TRAFFIC CONTROL DEVICES FOR STREETS AND HIGHWAYS.

   THE CONTRACTOR SHALL, AT THE REQUEST OF THE OWNER, ERECT A TEMPORARY TICKET BOOTH OR RELOCATE THE EXISTING BOOTH ALL AT OWNER'S EXPENSE AND DIRECTION.

PARCEL 13-100-WA

1. AREA IS LOCATED ON NORTH SIDE OF PROSPECT AVENUE ALONG THE FRONT OF THE PARKING GARAGE AND THE ACCESS DRIVE TO STOUFFERS.
2. WORK ON THE APPROACH DRIVE MUST BE COMPLETED AS SOON AS POSSIBLE TO ALLOW MINIMUM OBSTRUCTION TO THE ACCESS DRIVE EITHER BY PHASE CONSTRUCTION, USE OF HIGH EARLY CEMENT OR OTHER METHODS SUGGESTED AND SUBMITTED, IN WRITING, BY THE CONTRACTOR TO THE ENGINEER FOR APPROVAL.
3. SPS MANAGEMENT CORPORATION OR STOUFFER WILL GIVE CONTRACTOR 14 DAYS ADVANCE WRITTEN NOTICE OF THE DATE ACCESS TO AND FROM THE EXHIBITION HALL ON PROPERTY OF OWNER WILL BE REQUIRED AND CONTRACTOR SHALL TAKE WHATEVER ACTION AS MAY BE REQUIRED TO PERMIT THE UNOBSTRUCTED ACCESS TO AND USE OF THE EXHIBITION HALL IN ITS USUAL AND CUSTOMARY MANNER. EXIT DOOR TO EXHIBITION HALL IS SHOWN ON SHEET 147.
4. CONTRACTOR SHALL AT NO TIME OBSTRUCT OR INTERFERE WITH THE FREE AND UNOBSTRUCTED USE OF THE EXITS SHOWN ON SHEET 147 WHICH MUST BE AVAILABLE FOR USE AS FIRE EXITS AND WILL DO NOTHING WITHIN THE WORK AREA THAT WILL RENDER THE USE OF SUCH FIRE EXITS UNSAFE IN ANY MANNER. NOTWITHSTANDING THE FOREGOING IT IS UNDERSTOOD THAT DURING THE PERFORMANCE OF THE WORK HEREIN DESCRIBED BY CONTRACTOR THAT OWNER, ISA, SPS AND STOUFFER SHALL BE DEPRIVED OF THE USE OF A PORTION OF THE ACCESS DRIVE. THE PARTIES ACKNOWLEDGE THAT THE USE OF THE ACCESS DRIVE IN ITS USUAL AND CUSTOMARY MANNER AND FOR ITS USUAL AND CUSTOMARY PURPOSES BY OWNER, ISA, SPS AND STOUFFER IS ABSOLUTELY ESSENTIAL AND CONTRACTOR SHALL DELIGENTLY PURSUE ITS WORK IN THE ACCESS DRIVE TO COMPLETION. CONTRACTOR SHALL COMPLETE ITS WORK IN THE ACCESS DRIVE IN PHASES. PHASE I SHALL PERTAIN TO THE WESTERLY 16' OF THE ACCESS DRIVE AND PHASE II SHALL PERTAIN TO THE EASTERLY 4' THEREOF. PHASE I SHALL BE PERFORMED DURING SUCH TIME AS APPROVED BY CONTRACTOR, SPS AND STOUFFER AND SHALL BE COMPLETED BY CONTRACTOR WITHIN SEVEN (7) CONSECUTIVE DAYS FROM THE DATE OF COMMENCEMENT OF ON SITE IMPROVEMENTS FOR PHASE I (WEATHER CONDITIONS PERMITTING). DURING THE PERFORMANCE OF PHASE I, OWNER, ISA, SPS AND STOUFFER SHALL HAVE THE UNOBSTRUCTED USE OF THE EASTERLY 4' (4' CLEARANCE) OF THE ACCESS DRIVE FOR ITS INTENDED PURPOSE. PHASE II SHALL BE PERFORMED UPON COMPLETION OF PHASE I AND CONTRACTOR SHALL DILIGENTLY PURSUE SUCH WORK TO COMPLETION. DURING THE PERFORMANCE OF PHASE II, OWNER, ISA, SPS AND STOUFFER SHALL HAVE THE UNOBSTRUCTED USE OF THE WESTERLY 16' (11' CLEARANCE) OF THE ACCESS DRIVE FOR ITS INTENDED PURPOSE. DURING THE PERFORMANCE OF PHASE I AND PHASE II, IF NECESSARY, OWNER, ISA, SPS AND STOUFFER SHALL HAVE THE RIGHT TO MAINTAIN A DUMPSTER OF SUFFICIENT SIZE FOR ITS NEEDS ON PROSPECT AVENUE AND SHALL HAVE THE RIGHT TO PARK TRUCKS AND OTHER VEHICLES ON PROSPECT AVENUE FOR THE PURPOSES OF MAKING DELIVERIES TO AND FROM THE HOTEL VIA THE ACCESS DRIVE. CONTRACTOR WILL PROMPTLY ADVISE OWNER, ISA, SPS AND STOUFFER OF ANY ANTICIPATED DELAY IN THE COMPLETION OF PHASE I AND II WORK SET FORTH ABOVE.

PARCEL 14-100-WA

1. THE AREA IS LOCATED AT STREET LEVEL, NORTH SIDE OF PROSPECT AVENUE ALONG THE HIGBEE BUILDING, BETWEEN ONTARIO STREET AND THE TERMINAL BUILDING.
2. DURING THE CONSTRUCTION PERIOD, WORK WILL BE PERFORMED IN SUCH A MANNER AS TO PERMIT PEDESTRIAN INGRESS AND EGRESS THROUGH THE PROSPECT AVENUE CUSTOMER ENTRANCES AT ALL TIMES (SINCE THESE ARE FIRE EXITS) AND TO PERMIT VEHICULAR INGRESS AND EGRESS TO AT LEAST 50% OF THE HIGBEE PROSPECT AVENUE TRUCK DOCK AT ALL TIMES DURING NORMAL WORKING HOURS AND, WITH CONTRACTOR'S APPROVAL, AT OTHER TIMES. (FIRE TRUCKS RESPONDING TO HIGBEE CALLS REPORT TO THE TRUCK DOCK). AT LEAST ONE OF THE TWO FIRE PLUGS FLANKING THE TRUCK DOCK ENTRANCES SHALL BE KEPT IN OPERATION AT ALL TIMES DURING CONSTRUCTION.
3. NO CONSTRUCTION EQUIPMENT OR MATERIALS SHALL BE STORED ON SIDEWALK AREAS CONTINGUOUS TO THE HIGBEE STORE, EITHER ON THE ONTARIO STREET SIDE OR ON THE PROSPECT AVENUE SIDE IN AREAS NOT UNDER CONSTRUCTION.

PARCEL 17-100-WA

1. LOCATED ALONG THE FACE OF THE TERMINAL TOWER BUILDING (SEE SHEET 156).
2. SPECIFIC RESTRICTIONS
   - A. OWNER MUST HAVE DIRECT, UNDISTRUBED ACCESS TO ITS BUILDING FOR LOADING AND DELIVERY IN THE 20 FOOT WIDE DELIVERY DOORS (SEE SHEETS 4A AND 5) AT ALL TIMES DURING OWNER'S NORMAL BUSINESS HOURS. NO WORK BEING PERFORMED BY CONTRACTOR MAY IMPEDE SUCH ACCESS.
   - B. OWNER ACKNOWLEDGES THAT THE SIDEWALK BETWEEN THE NORTHERLY CURB OF PROSPECT AVENUE AND ITS SOUTH BUILDING LINE WILL BE REMOVED AND REPLACED DURING CONSTRUCTION. CONTRACTOR MUST COVER SUCH DEPRESSED AREAS CAUSED BY THE REMOVAL OF THE SIDEWALK WITH A HIGH-TRACTION, SLIP-RESISTANT MATERIAL CAPABLE OF WITHSTANDING A LOAD OF 100 LBS. PER SQUARE FOOT OVER ALL PORTIONS OF SUCH DEPRESSED AREAS EXCEPT IN FRONT OF OWNER'S LOADING AREA WHERE A MATERIAL CAPABLE OF WITHSTANDING A LOAD OF 3,000 LBS. PER SQUARE FOOT WILL BE MAINTAINED. ANY RESULTING DISPARITY BETWEEN THE BRIDGE LEVEL AND THE LEVEL OF ANY OF OWNER'S MAIN ACCESS AND LOADING AREA OPENINGS FROM ITS BUILDING MUST EACH BE BRIDGED BY A RAMP AT LEAST SEVEN AND A HALF (7-1/2') FEET WIDE AND SIXTEEN (16') FEET LONG.
   - C. DOORS OR OPENINGS FROM OWNER'S BUILDING TO PROSPECT AVENUE MUST BE AVAILABLE FOR INGRESS TO AND EGRESS FROM OWNER'S BUILDING TO THE EXTENT POSSIBLE DURING CONSTRUCTION. OWNER ACKNOWLEDGES THAT SOME BLOCKAGE OF OWNER'S MAIN ACCESS DOORS (LOCATED ASTRIDE THE AXIS OF THE TERMINAL TOWER) MAY OCCUR DUE TO THE PHASING OF CONTRACTOR'S WORK PROVIDED THAT AT LEAST HALF OF THE DOORS IN SUCH MAIN ACCESS AREA ARE AVAILABLE FOR INGRESS AND EGRESS AT ALL TIMES.
   - D. BOTH DESIGNATED REPRESENTATIVES OF CONTRACTOR AND OWNER SHALL KEEP EACH OTHER INFORMED AS TO THE CURRENT MEANS OF FIRE PROTECTION ACCESS TO OWNER'S PROPERTY. MAINTENANCE OF FIRE EXITS AND ACCESS OF FIRE VEHICLES SHALL BE IN ACCORDANCE WITH THE FIRE SAFETY PLAN, SHEET 144, GENERAL NOTES TO THE CONSTRUCTION PLANS.

EUTHENICS INC.
CONSULTING ENGINEERS
CLEVELAND OHIO

REHABILITATION OF TOWER CITY BRIDGES
PROSPECT AVE., HURON ROAD,
WEST 2ND., 3RD. & 6TH. ST. VIADUCTS

GENERAL NOTES

CLEVELAND CUYAHOGA COUNTY OHIO

Mode LJD	Trcd. TJ	Ckd. LJD	Rev. RAB	Revised
Date 10-1-82	Date 10-4-82	Date 7-21-83	Date 7-22-83	Sheet 16C / 170

GENERAL NOTES

FHWA REGION	STATE	PROJECT	
5	OHIO	M-ID 99(9)	

16D / 170

CUYAHOGA COUNTY
HURON / PROSPECT BRIDGE

PARCEL 15-100-WA

1. LOCATED ALONG THE FACE OF THE RESS REALTY COMPLEX CONTAINING THE REPUBLIC, MIDLAND AND GUILD HALL BUILDINGS ON PROSPECT AVENUE, WEST 2ND STREET AND HURON ROAD, SEE SHEET 163.
2. SPECIFIC REQUIREMENTS
   A. THE WORK IS TO BE PERFORMED IN VARIOUS PHASES AND IN CERTAIN PHASES IS DIVIDED BETWEEN SUB-PHASES AS SET FORTH IN THE CONSTRUCTION PLANS. THE PHASING OF THE WORK IS IN PART TO ASSURE CONTINUED ACCESS TO THE BUILDINGS WHICH ARE PART OF THE OWNER'S PREMISES FOR PEDESTRIAN AND VEHICULAR INGRESS AND EGRESS AND LOADING PURPOSES AND TO PERMIT USE OF FIRE EXITS, STANDPIPES AND SPRINKLER FACILITIES. DURING THE PERFORMANCE OF THE WORK, CONTRACTOR SHALL STRICTLY OBSERVE AND COMPLY WITH ALL OF THE REQUIREMENTS CONTAINED IN THE GENERAL NOTES TO THE CONSTRUCTION PLANS.

   B. IN ADDITION TO THE REQUIREMENTS CONTAINED IN THE GENERAL NOTES REFERED TO ABOVE, THE CONTRACTOR SHALL COMPLY WITH THE FOLLOWING:
      (I) DURING PHASE 5A, CONTRACTOR WILL PROVIDE ACCESS INTO AND OUT OF BOTH ENTRY 1 AND ONE OF THE TWO LOADING DOCKS AT ENTRY 2 SHOWN ON CONSTRUCTION DRAWING NO. 149 VIA A HIGH-TRACTION, SLIP-RESISTANT TEMPORARY RAMP CAPABLE OF WITHSTANDING A LOAD OF 3,000 LBS. PER SQUARE FOOT WITH HANDRAILS AND A CLEAR WIDTH OF FIVE FEET IN ORDER TO PERMIT LOADING AND RECEIPT OF DELIVERIES BY RESS AND ITS TENANTS.
      (II) DURING PHASE 5B, CONTRACTOR SHALL NOT PLACE A BARRICADE OR OTHER OBSTRUCTION IN THE VICINITY OF ENTRY 3 SHOWN ON CONSTRUCTION DRAWING NOS. 149 AND 150 WHICH WILL MATERIALLY INTERFERE WITH ACCESS TO THE RESS LOADING/RECEIVING AREA AT THAT LOCATION.
      (III) OWNER SHALL SECURE NECESSARY AUTHORIZATIONS WITH CONTRACTOR'S ASSISTANCE WHEN NECESSARY FOR TEMPORARY PLACEMENT OF DUMPSTERS ON HURON ROAD DURING PHASE 5B OF THE WORK FOR USE BY RESS FOR REFUSE DISPOSAL.
      (IV) DURING PHASE 6, CONTRACTOR SHALL PROVIDE, IF REQUIRED, PROMPT ACCESS TO THE "SOHIO COMPUTER ACCESS AND VENT" AREA SHOWN ON CONSTRUCTION DRAWING NOS. 149 AND 150 FOR SERVICING AND/OR REPLACING EQUIPMENT LOCATED THEREIN WHICH IS AN INTEGRAL PART OF THE STANDARD OIL COMPANY COMPUTER FACILITIES. IF THE CONTRACTOR HAS A DERRICK, WINCH AND/OR CRANE EQUIPMENT ON THE CONSTRUCTION SITE WHEN SUCH SERVICING AND/OR REPLACEMENT IS REQUIRED, HE SHALL COOPERATE WITH RESS AND/OR THE STANDARD OIL COMPANY BY MAKING THIS EQUIPMENT AVAILABLE TO THEM FOR THIS PURPOSE.
      (V) THE CONTRACTOR SHALL NOT PERFORM PHASE 5 WORK DURING THE PERIOD FROM NOVEMBER 1, 1984 TO MAY 31, 1985. PHASE 6 MAY BE INITIATED AND COMPLETED PRIOR TO PHASE 5 IN THE EVENT THAT PHASE 5 WORK IS OR MIGHT OCCUR DURING THE PERIOD FROM NOVEMBER 1, 1984 TO MAY 31, 1985. *

   C. COOPERATION AND INDEMNIFICATION

   OWNER SHALL COOPERATE WITH CONTRACTOR TO EXPEDITE THE COMPLETION OF WORK IN THE AREA OF THIS AGREEMENT. TO THIS END, RESS AGREES TO PAY DELAY COSTS REASONABLY INCURRED BY CONTRACTOR BY REASON OF ANY TENANT, LESSEE, AGENT OR EMPLOYEE OF RESS WHO MATERIALLY OBSTRUCTS OR DELAYS CONTRACTOR'S ACCESS TO THE WORK AREA PROVIDED SUCH OBSTRUCTION OR DELAY CONTINUES FOR MORE THAN ONE WORKING DAY AFTER WRITTEN NOTICE THEREOF TO RESS, AND PROVIDED SUCH OBSTRUCTION OR DELAY IS NOT CAUSED BY FORCE MAJEURE OR OTHER OCCURRENCES OR EVENTS (INCLUDING STRIKES OR LABOR DISPUTES) AFFECTING AND BEYOND THE CONTROL OF A TENANT, LESSEE, AGENT OR EMPLOYEE OF RESS.

*ADDITIONAL NOTE TO 2-B-(V)

THE TIME PERIOD RESTRICTION FOR PHASE 5 SHALL NOT BE MODIFIED WITHOUT PRIOR COORDINATION AND WRITTEN AGREEMENT BY THE AFFECTED PROPERTY OWNER AND THE ENGINEER.

PARCEL 10-72.5-WA(L-1) - CAB STAND

1. THE WORK AREA CONTAINS ALL OF THE RAMPS, PASSAGES, AISLES, PARKING SPACES AND DRIVEWAYS COMPRISING THE CAB STAND AND TRUCKING PASSAGE ("PARKING AREA") AT THE 72.5 LEVEL BENEATH A PORTION OF THE BRIDGES OF PROSPECT AVENUE, HURON ROAD AND WEST 3RD STREET, AS SHOWN ON SHEETS 166 AND 167.
2. ACCESS: THE CONTRACTOR SHALL NOT BE PERMITTED TO PARK ANY EQUIPMENT OR VEHICLES (CONSTRUCTION OR OTHERWISE) IN ANY AISLE, PASSAGE, DRIVEWAY OR RAMP PORTION OF THE PARKING AREA. CONSTRUCTION EQUIPMENT MAY BE PARKED OR USED ON SCAFFOLDING ERECTED IN THE WORK AREA AND ALSO IN PORTIONS OF ANY BARRICADED ACCESS AREA (AS HEREINAFTER DEFINED) IMMEDIATELY PROXIMATE TO THE LOCATION WHERE ACTUAL BRIDGE INSPECTION OR REPAIR WORK IS BEING PERFORMED.
   CONTRACTOR RECOGNIZES AND ACKNOWLEDGES THAT, BECAUSE OF THE NARROWNESS OF THE TRUCKING PASSAGE PORTION OF THE PARKING AREA, THERE ARE NO MEANS BY WHICH IT MAY HAVE EXCLUSIVE CONTROL OVER SUCH AREA. THE CONTRACTOR WILL ATTEMPT TO USE BEST EFFORTS TO MAINTAIN AN UNINTERRUPTED FLOW OF PEDESTRIAN AND VEHICULAR TRAFFIC THROUGH THE TRUCKING PASSAGE. OWNER AGREES TO PROHIBIT THE PARKING OF AUTOMOBILES IN THE TRUCKING PASSAGE AND THE PARKING AREAS ADJACENT TO THE TRUCKING PASSAGE IN THE AREAS BOUNDED BY E.J. 25 AND E.J. 17 AND E.J. 20 AND E.J. 19, OR BENEATH WEST 2ND STREET TO A POINT 50' EAST OF E.J. 19 WHILE WORK BEING PERFORMED ON THESE AREAS OF HURON ROAD, WHILE BRIDGE REPAIRS ARE BEING PERFORMED ON THE HURON ROAD BRIDGE DECK ABOVE THESE AREAS SO AS TO ALLOW CONTRACTOR THE NECESSARY ROOM TO CONSTRUCT SCAFFOLDING SUFFICIENT TO (I) ENABLE INSPECTION OR REPAIR WORK TO BE PERFORMED, (II) CATCH FALLING DEBRIS AND(III) ALLOW THE CONTINUOUS PASSAGE OF TRAFFIC THROUGH IT. IN LIGHT OF THE INCREASED TRAFFIC FLOW DURING THE MORNING AND EVENING RUSH HOURS (7:00-9:00 A.M. AND 4:00-6:00 P.M.), BEST EFFORTS MUST BE MADE BY THE CONTRACTOR SO THAT CONSTRUCTION WORK OR MOVEMENT OF CONSTRUCTION VEHICLES AND EQUIPMENT IN AISLES, DRIVEWAYS, PASSAGES OR RAMPS OF THE PARKING AREA DURING SAID HOURS WILL NOT IMPEDE THE FLOW OF INCOMING AND OUTGOING TRAFFIC.
3. CONSTRUCTION: CONTRACTOR SHALL BE PERMITTED TO REMOVE AND/OR RELOCATE GUARDRAILS OR OTHER BARRIERS BETWEEN THE INGRESS AND EGRESS RAMPS TO AND FROM THE PARKING AREA AND WEST 6TH STREET SO AS TO FACILITATE ACCESS BY CONSTRUCTION VEHICLES OR FOR THE PURPOSE OF RE-ROUTING INCOMING OR OUTGOING TRAFFIC, PROVIDED THAT CONTRACTOR RESTORES AND REPLACES SUCH REMOVED OR RELOCATED GUARDRAILS OR BARRIERS TO THEIR PREVIOUS CONDITION WHEN WORK HAS BEEN COMPLETED. IF SUCH CONSTRUCTION WORK NECESSITATES THAT INCOMING TRAFFIC TO THE PARKING AREA BE RE-ROUTED AROUND ITS NORMAL MEANS OF INGRESS OVER A VEHICLE DETECTOR, CONTRACTOR AGREES, AT OWNER'S EXPENSE, TO RELOCATE THE VEHICLE DETECTOR IN THE RELOCATED MEANS OF INGRESS TO THE PARKING AREA PRIOR TO ANY SUCH RE-ROUTING OF INCOMING TRAFFIC.
4. BARRICADED ACCESS AREAS: IN THE PORTION OF THE PARKING AREA LOCATED BENEATH PROSPECT AVENUE, CONTRACTOR SHALL BE PERMITTED TO BARRICADE CERTAIN AREAS WHERE PARKING WOULD NORMALLY OCCUR ("BARRICADED ACCESS AREAS"), PROVIDED THAT CONTRACTOR USES BEST EFFORTS TO MAINTAIN CONTINUOUS ACCESS THROUGH SUCH AISLES, PASSAGES, DRIVEWAYS OR RAMPS AS ARE LOCATED IN, THROUGH, ADJACENT TO OR IN PROXIMITY TO THIS AREA. THE SIZE OF SUCH BARRICADED ACCESS AREAS SHALL BE LIMITED AS FOLLOWS: AT NO TIME MAY CONTRACTOR BARRICADE AN AREA (FROM EAST TO WEST) WHICH IS LARGER THAN THE DISTANCE BETWEEN ADJACENT EXPANSION JOINTS PLUS TWENTY (20') FEET ON EITHER SIDE OF JOINTS. CONTRACTOR MAY PARK CONSTRUCTION EQUIPMENT WITHIN AND PERFORM INSPECTION AND REPAIR WORK TO THE PROSPECT AVENUE BRIDGE DECK ABOVE SUCH BARRICADED ACCESS AREA TO THE EXCLUSION OF VEHICULAR AND PEDESTRIAN TRAFFIC. CONTRACTOR SHALL PROVIDE BARRICADES AND SIGNAGE (WHICH SHALL CONFORM TO THE UNIFORM CODE OF SIGNING STANDARDS AS SET FORTH IN THE OHIO MANUAL OF UNIFORM TRAFFIC CONTROL DEVICES FOR STREETS AND HIGHWAYS) ADEQUATE TO EXCLUDE THE BARRICADED ACCESS AREA FROM PEDESTRIAN AND VEHICULAR TRAFFIC AND TO DIRECT AND INFORM OWNER'S PARKING AREA PATRONS. CONTRACTOR SHALL BE REQUIRED TO CONFINE THE BARRICADED ACCESS AREA ONLY TO THE PROXIMATE AREA ABOVE WHICH IT IS PRESENTLY WORKING SO AS TO MINIMIZE TO THE EXTENT POSSIBLE THE NUMBER OF PARKING SPACES TEMPORARILY DISPLACED DURING CONSTRUCTION. IN THE PORTION OF THE PARKING AREA LOCATED BENEATH HURON ROAD, CONTRACTOR SHALL BE PERMITTED TO BARRICADE CERTAIN AREAS WHERE PARKING WOULD NORMALLY OCCUR ("BARRICADED ACCESS AREA"), PROVIDED THAT CONTRACTOR USES BEST EFFORTS TO MAINTAIN CONTINUOUS ACCESS THROUGH THE "TRUCKING PASSAGE". IN THE EVENT CONSTRUCTION EMERGENCY ABOVE NECESSITATES A TEMPORARY BARRICADING OF THE "TRUCKING PASSAGE" IN THE OPINION OF THE PROJECT ENGINEER, OWNER AGREES TO THE TEMPORARY BARRICADING AND ACKNOWLEDGES THAT THERE MAY TEMPORARILY BE NO ACCESS TO THE PARKING AREA AT THE EAST END OF THE TRUCKING PASSAGE BENEATH HURON ROAD DURING THE LENGTH OF SUCH EMERGENCY. CONTRACTOR WILL USE BEST EFFORTS TO EXPEDITIOUSLY RESTORE ACCESS TO THE PARKING AREA AT THE EAST END OF THE TRUCKING PASSAGE.

PARCEL 10-72.5-WA

1. THIS PARCEL IS COMPRISED OF THE SOUTHWEST QUADRANT (OLD RAILROAD OFFICES), STATION FACILITIES, LUNCH ROOM AND A STORAGE AREA AS OUTLINED ON SHEETS 166 AND 167. NO WORK IS INTENDED TO BE PERFORMED AT THE 72.5 LEVEL. THE CONTRACTOR MAY USE THIS AREA AS ACCESS THROUGH THE CEILING OF THIS LEVEL TO BRIDGE DECK ABOVE WHERE THE WORK IS TO BE PERFORMED.
2. SPECIFIC RESTRICTIONS: BECAUSE OF THE FRAGILE NATURE OF THE PLASTER CEILING ABOVE THE SOUTHWEST QUADRANT STATION FACILITIES AND LUNCH ROOM THE CONTRACTOR MUST EXERCISE EXTREME CAUTION WHILE WALKING, HAULING EQUIPMENT, ERECTING FRAMING OR SCAFFOLDING ON, OR PERFORMING ACTUAL BRIDGE REPAIRS ABOVE THIS AREA SO AS TO AVOID DAMAGE TO THE CEILING. WHEN PERFORMING BRIDGE REPAIRS ABOVE THE STORAGE AREA THE CONTRACTOR AGREES TO NOFIFY THE OWNER AT LEAST SIX (6) MONTHS PRIOR TO THE DATE WORK IS EXPECTED TO COMMENCE SO THAT THE OWNER MAY ARRANGE TO RELOCATE ALL OR A PORTION OF THE EQUIPMENT STORED IN THIS AREA.

PARCELS 10A-72.5-WA, 10B-72.5-WA, 10C-72.5-WA & 10D-72.5-WA

1. TERMINAL CONCOURSE AREAS.
2. THE CONTRACTOR AND OWNER WILL AGREE ON THE LIMITS AND LENGTH OF TIME SPECIFIED AREAS WILL BE BLOCKED-OFF FROM PEDESTRIAN AND VEHICULAR TRAFFIC. OWNER WILL PROVIDE CONTRACTOR WITH A PLAN OF DESIGNATED ENTRANCE AND EXIT ROUTES FOR HAULING MATERIALS, SUPPLIES AND EQUIPMENT TO THE GENERAL AREA BEING WORKED ON ABOVE.

PARCEL 10E-72.5-WA

1. NO WORK IS PERMITTED TO BE PERFORMED ON THIS PARCEL KNOWN AS THE ENGLISH OAK ROOM.
2. SPECIAL RESTRICTIONS: THE COLUMNS AND WALLS OF THE OAK ROOM BENEATH THE RACKLE TILE CEILING UNDER THE WORK AREA ARE MADE OF IRREPLACEABLE, EXTREMELY VALUABLE SCOTTISH OAK. THE CEILINGS ARE MADE OF A HIGH-RELIEF UNIQUELY-DECORATED CAST PLASTER OF SIMILAR VALUE. DUE TO THE VALUE OF THESE MATERIALS, CONTRACTOR AGREES TO USE SPECIAL PRECAUTIONS WHILE WORKING ABOVE THE WORK AREA SO AS TO PREVENT ANY WATER INTRUSION OF FALLING DEBRIS ONTO OR THROUGH THE RACKLE TILE CEILING. CONTRACTOR MUST AFFORD THE TCP DESIGNATED REPRESENTATIVE AND THE ENGINEER THE OPPORTUNITY TO INSPECT AND APPROVE THE PROTECTION METHOD TO BE USED DURING CONSTRUCTION TO PREVENT WATER INTRUSION AND FALLING DEBRIS ABOVE THE OAK ROOM PRIOR TO COMMENCEMENT OF WORK. FURTHER, OWNER RESERVES THE RIGHT TO INSTALL A WATERPROOFING MEMBRANE ON THE RACKLE TILE CEILING BELOW THE WORK AREA AND ABOVE THE OAK ROOM CEILING. IF SUCH MEMBRANE IS INSTALLED, OWNERS DESIGNATED REPRESENTATIVE WILL COORDINATE THE INSTALLATION WITH THE CONTRACTOR TO AVOID DISRUPTING HIS OPERATIONS. THE CONTRACTOR SHALL, IN TURN, CAREFULLY AVOID ANY DAMAGE TO THE NEW MEMBRANE.

PARCEL 14-72.5-WA

1. THE AREA IS LOCATED IN THE HIGBEE STORE LEVEL 72.5 BELOW PROSPECT AVENUE AND CONTAINS THE BUDGET STORE, SHOE STORE, SHOE STOCK ROOM AND LOCKER ROOM.
2. HIGBEES WILL PROVIDE THE CONTRACTOR WITH A PLAN OF DESIGNATED ENTRANCE AND EXIT ROUTES FOR HAULING MATERIALS, SUPPLIES AND EQUIPMENT TO THE GENERAL AREAS BEING WORKED ON.
3. THE CONTRACTOR SHALL PROVIDE ADDITIONAL PROTECTION FOR THE TRANSFORMERS AT THE END OF THE SHOE STOCKROOM AND FOR EMPLOYEES USING THE LOCKER ROOM IF HIGBEES KEEPS THESE FACILITIES IN OPERATION.

EUTHENICS INC.
CONSULTING ENGINEERS
CLEVELAND OHIO

REHABILITATION OF TOWER CITY BRIDGES
PROSPECT AVE., HURON ROAD,
WEST 2ND., 3RD. & 6TH. ST. VIADUCTS

GENERAL NOTES

CLEVELAND CUYAHOGA COUNTY OHIO

Mode LJD	Trcd. TJ	Ckd. LJD	Rev. RAB	Revised
Date 8-5-82	Date 9-20-82	Date 7-21-83	Date 7-22-83	Sheet 16D/170

GENERAL NOTES

FHWA REGION	STATE	PROJECT	
5	OHIO	M-ID 99 (9)	

16E
170

CUYAHOGA COUNTY
HURON / PROSPECT BRIDGE

PARCEL 10-52-WA - ACCESS DRIVE

1. THE ACCESS DRIVE FROM CANAL ROAD WHICH INCLUDES PART OF THE EXISTING PARKING LOT DRIVE SHALL BE USED BY THE CONTRACTOR TO HAUL IN EQUIPMENT AND SUPPLIES. THE EXACT LOCATION OF THE DRIVE SHALL BE STAKED OUT IN THE FIELD TO THE MUTUAL SATISFACTION OF THE OWNER AND CONTRACTOR AS SHOWN IN THE RIGHT-OF-WAY PLANS, SHEET 168. CONTRACTOR SHALL NOT BLOCK SUCH ACCESS AT ANY TIME BY STORING OR PARKING EQUIPMENT, VEHICLES AND/OR SUPPLIES IN THE ACCESS DRIVE.

2. SPECIFIC RESTRICTIONS: THESE RESTRICTIONS SHALL APPLY TO ALL WORK PERFORMED IN OR ABOVE, AND/OR ACCESS GRANTED TO AND FROM, OWNER'S PAVED PARKING LOT. THE AREA OF SAID PAVED PARKING LOT SOUTH OF THE HURON ROAD BRIDGE DECK FROM E.J. 32 ON THE WEST AND THE FENCE HALFWAY BETWEEN E.J. 23 AND E.J. 24 ON THE EAST SHALL BE KNOWN AND REFERRED TO HEREIN AS THE "RESTRICTED AREA". WITHIN THE RESTRICTED AREA, THE FOLLOWING RESTRICTIONS SHALL APPLY:

   A. CONTRACTOR SHALL BE REQUIRED TO CONFINE ALL OF ITS VEHICLES, WHETHER HEAVY CONSTRUCTION OR OTHERWISE, TO THE WORK AGREEMENT AREA AS SHOWN ON THE RIGHT-OF-WAY PLANS, SHEETS 169 AND 170. NO VEHICLES OF CONTRACTOR SHALL BE PERMITTED TO BE DRIVEN OUTSIDE OF THIS DESIGNATED ACCESS AREA, EXCEPT AS SET FORTH BELOW. CONTRACTOR SHALL NOT BE PERMITTED TO PARK ANY VEHICLE IN THE DESIGNATED ACCESS AREA OR IN ANY PORTION OF THE ACCESS AREA EXCEPT AS SET FORTH BELOW.

   B. WHILE WORKING ON THE 72.5', 85' OR 100' LEVELS OF THE HURON ROAD BRIDGE DECK, CONTRACTOR MAY BARRICADE AN AREA, WITHIN THE WORK AGREEMENT AREA, NO GREATER IN LENGTH (FROM EAST TO WEST) THAN THE DISTANCE BETWEEN ANY TWO (2) ADJACENT EXPANSION JOINTS PLUS TEN (10') FEET ADDED (FROM EAST TO WEST) ON EACH END OF THE EXPANSION JOINTS ("BARRICADED AREA"). ANY SUCH AREA MAY BE BARRICADED ONLY WHILE CONTRACTOR IS WORKING ON THE BRIDGE DECK ABOVE SUCH AREA AND THE BARRICADES SHALL BE REMOVED PROMPTLY FOLLOWING THE COMPLETION OF WORK IN THE BARRICADED AREA. OWNER AND CONTRACTOR SHALL USE THEIR BEST EFFORTS TO ASSURE THAT NO CARS PARKED WITHIN OR DRIVE THROUGH AND THAT NO PEDESTRIANS WALK THROUGH OR CONGREGATE WITHIN THE BARRICADED AREA. CONTRACTOR WILL USE THE BARRICADED AREA FOR THE PURPOSE OF GAINING ACCESS TO BRIDGE REPAIR WORK BEING PERFORMED ABOVE AND FOR THE FURTHER PURPOSE OF PARKING AND STORING CONSTRUCTION VEHICLES AND EQUIPMENT.

   CONTRACTOR MAY BARRICADE ONLY ONE SUCH AREA AT ANY ONE TIME. CONTRACTOR AGREES TO PROVIDE ONWNER WITH AT LEAST FOURTEEN(14) DAYS PRIOR NOTICE OF THE NEED TO BARRICADE SUCH AREA. THE BARRICADES SUPPLIED AND INSTALLED BY CONTRACTOR MUST BE ADEQUATE ENOUGH TO PREVENT ANY AUTOMOBILES FROM PARKING WITHIN THE BARRICADED AREA. CONTRACTOR SHALL ALSO PROVIDE SIGNS TO DESIGNATE A BARRICADED AREA AND TO CLEARLY INDICATE THAT NO PARKING IS PERMITTED THEREIN. SUCH SIGNS SHALL CONFORM TO THE UNIFORM CODE OF SIGNING STANDARDS AS SET FORTH IN THE OHIO MANUAL OF UNIFORM TRAFFIC CONTROL DEVICES FOR STREETS AND HIGHWAYS. CONTRACTOR SHALL USE ITS BEST EFFORTS TO ASSURE THAT NO PASSAGE THROUGH THE CRASH WALL BETWEEN THE EXTERIOR AND COVERED PORTIONS OF THE PARKING LOT WILL BE COMPLETELY BLOCKED. HOWEVER, IF CONSTRUCTION ABOVE ANY BARRICADED AREA OR ANY REPAIRS TO THE CRASH WALLS AS DESCRIBED IN THE GENERAL NOTES OF THE CONSTRUCTION PLANS SHOULD REQUIRE A TEMPORARY BLOCKING OF ANY SUCH PASSAGE, CONTRACTOR SHALL BE RESPONSIBLE FOR SUPPLYING INFORMATIONAL AND DIRECTIONAL SIGNAGE TO INFORM AND REDIRECT PARKING LOT PATRONS TO ALTERNATE, UNIMPEDED PASSAGES. SUCH SIGNS SHALL CONFORM TO THE UNIFORM CODE OF SIGNING STANDARDS AS SET FORTH IN THE OHIO MANUAL OF UNIFORM TRAFFIC CONTROL DEVICES FOR STREETS AND HIGHWAYS.

   C. WHILE WORK IS BEING PERFORMED ON E.J. 30 ON THE HURON ROAD BRIDGE, OF WHICH CONTRACTOR AGREES TO GIVE OWNER AT LEAST FOURTEEN (14) DAYS PRIOR NOTICE, CONTRACTOR MAY BARRICADE AN AREA FORTY (40') FEET BY ONE HUNDRED TWENTY FOUR (124') FEET (TO INCLUDE TWENTY FEET (20') ON EITHER SIDE OF E.J. 30) TO EXCLUDE PEDESTRIAN AND VEHICULAR TRAFFIC AND THE PARKING OF VEHICLES WITHIN SUCH AREA. CONTRACTOR AND OWNER SHALL USE THEIR BEST EFFORTS TO ASSURE THAT NO CARS PARK WITHIN OR DRIVE THROUGH AND THAT NO PEDESTRIANS WALK THROUGH OR CONGREGATE WITHIN THE BARRICADED AREA. CONTRACTOR SHALL BE RESPONSIBLE FOR SUPPLYING INFORMATIONAL AND DIRECTIONAL SIGNAGE TO INFORM AND REDIRECT PARKING LOT PATRONS TO ALTERNATE, UNIMPEDED PASSAGES. SUCH SIGNS SHALL CONFORM TO THE UNIFORM CODE OF SIGNING STANDARDS AS SET FORTH IN THE OHIO MANUAL OF UNIFORM TRAFFIC CONTROL DEVICES FOR STREETS AND HIGHWAYS.

   D. IN THE EVENT ANY PORTION OF THE PAVED PARKING SURFACE OF THE ACCESS ARE IS PUNCTURED OR RUPTURED BY HEAVY CONSTRUCTION VEHICLES OR EQUIPMENT, CONTRACTOR AGREES TO NOTIFY OWNER IMMEDIATELY OF THE EXTENT AND LOCATION OF DAMAGE AND TO REPAIR THE DAMAGE TO OWNER'S REASONABLE SATISFACTION AND TO SECURE THE DAMAGED AREA FROM PEDESTRIAN AND VEHICULAR TRAFFIC DURING REPAIR.

PARCEL 16-52-WA

1. ACCESS DRIVE

   THE ACCESS DRIVE FROM SUPERIOR DOWN TO THE 52.0 LEVEL AT THE WEST END OF THE PROJECT ON THE OBA DELIVERY DRIVE PER SHEET 169 SHALL BE USED BY THE CONTRACTOR TO HAUL IN EQUIPMENT AND SUPPLIES. THE CONTRACTOR SHALL NOT BLOCK SUCH ACCESS AT ANY TIME BY STORING OR PARKING EQUIPMENT, VEHICLES AND/OR SUPPLIES IN THE DRIVE.

2. SPECIFIC RESTRICTIONS

   THESE RESTRICTIONS SHALL APPLY TO ALL WORK PERFORMED IN OR ABOVE, AND/OR ACCESS GRANTED TO AND FROM, THE WORK AREA OUTLINED ON PAGES 169 AND 170 OF THE CONSTRUCTION PLANS ATTACHED.

   A. THE CONTRACTOR SHALL BE REQUIRED TO CONFINE ALL OF ITS VEHICLES, WHETHER HEAVY CONSTRUCTION OR OTHERWISE, TO THE AREA OUTLINED ON SHEETS 169 AND 170 OF THE CONSTRUCTION PLANS. NO VEHICLES OF CONTRACTOR SHALL BE PERMITTED TO BE DRIVEN OR PARKED OUTSIDE OF THE DESIGNATED AREA.

   B. IN THE EVENT ANY PORTION OF THE PAVED PARKING SURFACE OF THE WORK AREA IS PUNCTURED OR RUPTURED, CONTRACTOR AGREES TO NOTIFY TOWER CITY PROPERTIES (TCP) AND OHIO BUILDING AUTHORITY (OBA) IMMEDIATELY OF THE EXTENT AND LOCATION OF DAMAGE AND TO REPAIR THE DAMAGE TO TCP'S REASONABLE SATISFACTION AND TO SECURE THE DAMAGED AREA FROM PEDESTRIAN AND VEHICULAR TRAFFIC DURING REPAIR.

   C. CONTRACTOR, EXCEPT TEMPORARILY FOR CAUSES BEYOND ITS CONTROL, MAY NOT OBSTRUCT OR IMPAIR THE PASSAGE OF PEDESTRIAN OR VEHICULAR TRAFFIC ALONG ANY PART OF THE ACCESS DRIVE PORTION OF THE WORK AREA. ACCESS MUST BE MAINTAINED AT ALL TIMES. NO WORK OF CONTRACTOR IN THE WORK AREA MAY UNREASONABLY OR MATERIALLY INTERFERE WITH THE EXERCISE OF ACCESS RIGHTS BY OWNER, GCRTA AND OBA ACROSS PORTIONS OF THE WORK AREA.

   D. CONTRACTOR AGREES TO BARRICADE AND INDICATE BY SIGNS THAT VEHICULAR AND PEDESTRIAN TRAFFIC ARE EXCLUDED FROM THAT PORTION OF THE WORK AREA DIRECTLY ABOVE WHICH CONTRACTOR MAY BE PERFORMING BRIDGE OR DRAIN REPAIR WORK. ALL SIGNS SHALL CONFORM TO THE UNIFORM CODE OF SIGNING STANDARDS AS SET FORTH IN THE OHIO MANUAL OF TRAFFIC CONTROL DEVICES FOR STREETS AND HIGHWAYS.

   E. CONTRACTOR AGREES TO OBSERVE THE SPECIAL REQUIREMENTS AND PRECAUTIONS RELATING TO GCRTA AS CONTAINED IN GENERAL NOTES, PAGES 12 AND 16B, OF THE CONSTRUCTION PLANS.

   F. ALL REASONABLE CARE IN THE PERFORMANCE OF THE WORK SHALL BE EXERCISED TO AVOID ACCIDENTS, DAMAGE OR UNNECESSARY DELAY TO, OR INTERFERENCE WITH THE TRAINS, TRACKS AND OTHER PROPERTY. THE CONTRACTOR WILL RESTORE ANY DAMAGED AREAS TO THEIR ORIGINAL CONDITION, AT HIS OWN EXPENSE, TO THE SATISFACTION OF THE OWNER AND GCRTA.

   G. ALL AREAS UNDER THE DECK SHALL BE PROTECTED FROM FALLING DEBRIS. THE CONTRACTOR SHALL NOT PERMIT THE CONCRETE, STEEL OR OTHER MATERIALS TO DROP ONTO THE TRACKS OR GROUND BELOW. MEANS SHALL BE PROVIDED FOR CATCHING THE MATERIALS AND DISPOSING OF THEM PROMPTLY AND NOT ALLOWING THEM TO ACCUMULATE.

   H. OBA AGREES TO PLACE A SIGN INDICATING THE LOCATION OF ITS UNDERGROUND PETROLEUM STORAGE TANK IN THE VICINITY OF THE ACCESS DRIVE. CONTRACTOR AGREES NOT TO PARK ANY HEAVY EQUIPMENT OR VEHICLES OVER SUCH TANK AND, TO THE EXTENT POSSIBLE TO AVOID DRIVING ANY SUCH EQUIPMENT OR VEHICLES OVER SUCH TANK.

SPECIAL REQUIREMENTS - RTA

1. THE CONTRACTOR SHALL:

   A. COOPERATE AT ALL TIMES WITH THE LOCAL OFFICIALS OF THE RTA.

   B. USE ALL REASONABLE CARE AND DILIGENCE IN THE WORK IN ORDER TO AVOID ACCIDENTS, DAMAGE OR UNNECESSARY DELAY TO, OR INTERFERENCE WITH THE TRAINS AND OTHER PROPERTY OF THE RTA.

   C. CONDUCT ITS WORK IN A MANNER SATISFACTORY TO THE RTA AND PERFORM ITS WORK IN SUCH A MANNER AND AT SUCH TIME AS NOT TO UNNECESSARILY INTERFERE WITH THE MOVEMENTS OF TRAINS OR RAILROAD TRAFFIC.

   D. COOPERATE WITH PUBLIC UTILITY, RAILROAD OR OTHER ORGANIZATIONS HAVING OCCASION TO DO WORK ON AND IN CONNECTION WITH THE IMPROVEMENT.

   E. AVOID UNNECESSARY USE OF RAILROAD PROPERTY WITHOUT WRITTEN PERMISSION OF THE RTA AND TO LEAVE RAILROAD ROADBED AND PROPERTY IN A CONDITION ACCEPTABLE TO THE RTA.

   F. NO TEMPORARY OR PERMANENT CROSSINGS OF RTA TRACK SHALL BE PERMITTED.

   G. METHODS AND PROCEDURES FOR PERFORMING WORK ON PROPERTY OF THE GREATER CLEVELAND REGIONAL TRANSIT AUTHORITY MUST BE APPROVED BY MR. WILLARD C. PISTLER, DIRECTOR OF ENGINEERING, THE GREATER CLEVELAND REGIONAL TRANSIT AUTHORITY, 615 SUPERIOR AVENUE, N.W., CLEVELAND, OHIO 44113.

   H. CONTRACTOR SHALL BEAR THE EXPENSE OF REPAIR TO ANY AND ALL OF RTA'S TRANSIT FACILITY DAMAGED BY ITS ACTS OR OMISSIONS. SAID REPAIRS TO BE MADE AT THE DIRECTION OF RTA AT THE EXPENSE OF THE CONTRACTOR.

   I. ALL AREAS UNDER THE DECKS OF THE BRIDGES SHALL BE PROTECTED FROM FALLING DEBRIS. THE CONTRACTOR SHALL NOT PERMIT THE CONCRETE STEEL OR OTHER MATERIAL TO DROP ONTO THE TRACKS, WIRES, CATERNARY OR GROUND BELOW. MEANS SHALL BE PROVIDED FOR CATCHING THE MATERIALS AND PROMPTLY DISPOSING OF THEM, AND NOT ALLOWING SUCH DEBRIS TO ACCUMULATE.

   J. CONTRACTOR SHALL, AT ALL TIMES, KEEP THE AREA UNDER CONSTRUCTION FREE FROM THE ACCUMULATION OF WASTE MATERIALS, DEBRIS OR RUBBISH CAUSED BY THE PERFORMANCE OF THE WORK.

   K. *The Contractor shall request, should the 600V DC Catenary System have to be insulated to prevent electrical shock, the work will be performed by G.C.R.T.A. forces at Contractor's expense.*

EUTHENICS INC.
CONSULTING ENGINEERS
CLEVELAND OHIO

REHABILITATION OF TOWER CITY BRIDGES
PROSPECT AVE., HURON ROAD,
WEST 2ND., 3RD. & 6TH. ST. VIADUCTS

GENERAL NOTES

CLEVELAND CUYAHOGA COUNTY OHIO

Made LJD	Trcd. TJ	Ckd. LJD	Rev. RAB	Revised
Date 8-4-82	Date 9-20-82	Date 7-21-83	Date 7-22-83	Sheet 16E / 170

FHWA REGION	STATE	PROJECT	
5	OHIO	M-ID 99 (9)	

CUYAHOGA COUNTY
HURON / PROSPECT BRIDGE

GENERAL SUMMARY

ITEM	TOTAL	UNIT	DESCRIPTION	NORMAL PARTICIPATION	CITY 100% UMTA	CITY 100% UDAG				SHEET REFERENCE
202*	43	Cu. Yd.	Concrete Portions of Substructure Removed	43*						17B, 100 & 101
202*	6,235	Cu. Yd.	Concrete Portions of Superstructure Removed	5,335*	900*					13 & 17B
202	5,724	Cu. Yd.	Sidewalk Wearing Course and Roadway Fill Concrete Removed	5,057	667					13 & 17B
202	28,770	Sq. Yd.	Asphalt Wearing Course Removed	25,715	3,055					13 & 17B
287,491 202**	279,612	Lbs.	Structural Steel Portions of Structure Removed 284,087	276,208**	3,404**					14, 17B & 55 thru 68
202*	Lump		Pipe Removed	Lump						13 & 55 thru 65
202	50	Lin. Ft.	Guard Rail Removed	50						17B & 29
202	2,569	Lin. Ft.	Fence Removed	2,569						17B, 18 & 26 thru 29
202	1,076	Lin. Ft.	Fence Removed for Re-use	600	476					13, 17B, 19, 20, 27, 28, 41 & 42
202	180	Lin. Ft.	Curb Removed	180						17B, 18 & 29
202	2,670	Sq. Ft.	Walk Removed	2,670						17B, 18, 20 & 29
304	8	Cu. Yd.	Aggregate Base	8						17B & 18
403	1,197	Cu. Yd.	Asphalt Concrete, AC-20	1,067	130					17B
404	793	Cu. Yd.	Asphalt Concrete, AC-20	707	86					17B
503	6	Cu. Yd.	Unclassified Excavation	6						17B & 102
719,468 509	684,852	Lbs.	Reinforcing Steel, Grade 60, as per plan 595,940	561,324	123,528					14, 17B, 102 & 124 thru 133
510	910	Each	Dowel Holes	910						14, 17B, 18, 27, 33 & 102
511	3,484	Cu. Yd.	Class C Concrete, Superstructure Fill Including Wire Mesh	3,106	378					14 & 17B
511	1,066	Cu. Yd.	Class S Concrete, Superstructure, Sidewalk Wearing Surface,	857	209					14 & 17B
			Including Wire Mesh							
511	4,290	Cu. Yd.	Class S Concrete, Superstructure, Structural Deck -	3,796	494					14 & 17B
			Complete Replacement, Safety Curb and Parapets							
511**	137	Cu. Yd.	Class C Concrete Superstructure, Beam Fireproofing,	134**	3**					15 & 17B
			Including Wire Mesh							
511**	2,118	Cu. Yd.	Class C Concrete Superstructure, Structural Deck - Repairs	2,042**	76**					14 & 17B
511	5	Cu. Yd.	Class C Concrete Substructure (Wingwall)	5						17B & 102
240,245 513**	173,213	Lbs.	Repairs to Existing Structural Steel AISC Category III 228,468	161,436**	11,777**					15, 17B & 55 thru 89
AISC CERTIFICATION NOT REQUIRED 513	89,996	Lbs.	Structural Steel for Curb Plates ~~AISC Category III~~	73,824	16,172					15, 17B & 55 thru 65
513	210,307	Lbs.	Structural Steel for Expansion Joint End Dam Framing ≠	206,148	4,159					15, 17B & 55 thru 65
514*	254,591	Lbs.	Field Painting New Structural Steel, System B	229,145*	25,446*					15 & 17B
514	Lump		Field Painting of Existing Steel - Surface Preparation	Lump						15 & 55 thru 65
514	Lump		Field Painting of Existing Steel - Spot Prime	Lump						15 & 55 thru 65
514	Lump		Field Painting of Existing Steel - One Complete Coat Prime	Lump						15 & 55 thru 65
514	Lump		Field Painting of Existing Steel - One Complete Coat Finish	Lump						15 & 55 thru 65
516	2,251	Lin. Ft.	Roadway Expansion Joint	2,251						16, 16A, 18 thru 20 & 26 thru 29
516	960	Lin. Ft.	Sidewalk Expansion Joint	960						16, 16A, 17B, 18 thru 20 & 26 thru 29
516	4,193	Lin. Ft.	Building Line Expansion Joint	2,592	1,177	424				16, 16A, 17A & 17B
518	7,843	Lin. Ft.	Subdrainage for Wearing Course, as per plan	6,417	1,426					15, 17C & 99
518**	58	Lin. Ft.	3" Ø Pipe, Horizontal Conductors, Including Specials	58**						15, 17C & 55 thru 63
518**	1,223	Lin. Ft.	4" Ø Pipe, Downspouts and Horizontal Conductors	1,019**	204**					15, 17C & 55 thru 63
			Including Specials							
518**	377	Lin. Ft.	8" Ø Pipe, Downspouts and Horizontal Conductors,	349**	28**					15, 17C & 55 thru 63
			Including Specials							
518**	14	Lin. Ft.	10" Ø Pipe, Downspouts and Horizontal Conductors,	14**						15, 17C & 62
			Including Specials							
518	73	Cu. Yd.	Porous Backfill	73						17C, 18 & 27
519	2,041	Sq. Ft.	Patching Concrete Structures	2,011	30					15, 17C & 100 thru 104
520	3,681	Sq. Ft.	Pneumatically Placed Mortar	1,369	10	2,302				15, 17C & 100 thru 104
603	7	Lin. Ft.	4" Ø Conduit Type B, as per plan	7						15, 17C & 105
603	30	Lin. Ft.	8" Ø Conduit Type B, as per plan	30						15, 17C & 105
604	4	Each	Monument Assemblies, as per plan	4						15, 17C & 113
604	6	Each	Catch Basins	6						15, 17C, 19, 26, 28 & 29
604	3	Each	Manhole Adjusted to Grade	3						17B, 18 & 20
606	712.5	Lin. Ft.	Guardrail, Type 6	712.5						4 thru 8 & 17C
607	2,077	Lin. Ft.	Fence, Type CL, as per plan	2,077						16, 17C & 107 thru 111
607	25	Lin. Ft.	Fence Rebuilt, as per plan	25						5, 16 & 17C
607	200	Lin. Ft.	Fence, Type Snow, as per plan	200						3A & 17C
607	37	Lin. Ft.	Fence, Type 47	37						17B & 18

*These table quantities have been increased 10% for possible overruns during construction.

**These table quantities have been increased 20% for possible overruns during construction.

≠ AISC Certification not required.

Revised 6-11-84

EUTHENICS INC.
CONSULTING ENGINEERS
CLEVELAND OHIO

REHABILITATION OF TOWER CITY BRIDGES
PROSPECT AVE., HURON ROAD,
WEST 2ND., 3RD. & 6TH. ST. VIADUCTS

GENERAL SUMMARY

CLEVELAND CUYAHOGA COUNTY OHIO

Made LJD	Trcd. JSC	Ckd. LJD	Rev. RAB	Revised 12-19-83
Date 3-16-83	Date 3-17-83	Date 3-17-83	Date 3-18-83	Sheet 17/170

FHWA REGION	STATE	PROJECT	
5	OHIO	M-ID99(9)	

17A / 170

CUYAHOGA COUNTY
HURON / PROSPECT BRIDGE

GENERAL SUMMARY

ITEM	TOTAL	UNIT	DESCRIPTION	NORMAL PARTICIPATION	CITY 100% UMTA	CITY 100% UDAG				SHEET REFERENCE
608	2,670	Sq. Ft.	4" Concrete Walk	2,670						17B, 18, 20 & 29
608	3	Each	Curb Ramps	3						17B, 18, 20 & 29
609	180	Lin. Ft.	Curb Standard Type 6	180						17B, 18 & 29
611	204	Sq. Yd.	Approach Slab, as per plan	204						17C, 25, 35 & 37
622	3,500	Lin. Ft.	Temporary Concrete Barrier	3,500						4 thru 9 & 17C
			See Sheet 119 for M.E.L.P. Utility Summary	Normal Participation						16A & 114 thru 123
			See Sheet 136A for traffic control summary	Normal Participation						
Special	38,374	Sq. Yd.	Membrane Waterproofing	33,514	4,860					15
Special	Lump		Interim Drainage	Lump						13
Special	Lump		Traffic Signs, Parking Meter Supports Removed	Lump						13
Special	Lump		Temporary Support System for OBT Cables		(OBT)					11, 17A & 170A thru 170D
Special*	7,409	Sq. Ft.	Patching Existing Concrete Deck Slabs, Less Than 1" Deep	7,214*	195*					16 & 17C
Special*	7,403	Sq. Ft.	Patching Existing Concrete Deck Slabs, Partial Depth	7,209*	194*					16 & 17C
Special*	7,398	Sq. Ft.	Patching Existing Concrete Deck Slabs, Full Depth	7,204*	194*					16 & 17C
Special*	491	Lin. Ft.	Crack Repair in Existing Concrete Deck Slabs	170*	321*					16 & 17C
Special*	3,300	Hours	Security During Construction	3,025*	275*					13 & 17C
Special	Lump		Audio Video Taping			Lump				12
Special	Lump		Cleanout, Repair and Painting of Existing Drainage System	Lump						16A
Special	100	Sq. Ft.	Replacement Signs	100						3A & 17C
50,363 824	(49,239)	Lbs.	Epoxy Coated Reinforcing Steel 39,037	(37,913)	11,326					17C & 124 thru 133
Special	453	Lin. Ft.	Fence, Steel Frame and Wood Panel	453						16, 17C, 106 & 112
Special	Lump		Secondary Drainage System		(TC)					151 thru 154
623	Lump		Construction Layout Stakes, As Per Plan	Lump						13
614	Lump		Maintaining Traffic	Lump						3A, 4 thru 9, & 13
624	Lump		Mobilization, as per plan	Lump						13

*These table quantities have been increased 10% for possible overruns during construction.

**These table quantities have been increased 20% for possible overruns during construction.

NOTES:

Portions of the project not qualifying for normal participation are designated 100% City for payment.

Normal participation consists of 85% Federal and 15% City.

The 15% City participation is subsidized from Urban Development Action Grant (UDAG).

The 100% City portion shall be subsidized by the (UDAG) Grant, Urban Mass Transit Authority Grant (UMTA), an Agreement with Ohio Bell Telephone Company (OBT) and Tower City Properties (TC).

The 100% City (UMTA) grant consists of all the items for the rehabilitation of the West 2nd, 3rd and 6th Streets viaducts. The street and sidewalk expansion joints at the intersection of West 2nd, 3rd and 6th Streets with Prospect Avneue and Huron Road are included for payment under normal participation and include the following items:

Item 513 - Structural Steel for Expansion Joint End Dam Framing
Item 516 - Roadway Expansion Joint
Item 516 - Sidewalk Expansion Joint

The building line expansion joints included for payment under 100% City (UDAG) are located as follows:

1. Prospect Avenue right side Sta. 10+87.09 to Sta. 12+83.09
2. Huron Road left side Sta. 14+14.10 to Sta. 14+87.60
3. Huron Road left side Sta. 25+89.93 to Sta. 27+44.50

Item Special - Temporary Cable Support System for OBT Cables included for payment under 100% City (OBT) shall include cutting the openings in the deck, erecting the posts and open web joists and removal of same when new ducts are supported from new forms, all as shown on attached OBT Drawings. Payment for this item shall include all labor, material and equipment necessary to complete the work as per Plan and shall be paid for by the Ohio Bell Telephone Company.

Item Special - Secondary Drainage System included for payment under 100% City (TC) shall include all labor, material and equipment necessary to complete the work as per Plan and shall be paid for by Tower City Properties.

Revised May 24, 1983

EUTHENICS INC.
CONSULTING ENGINEERS
CLEVELAND OHIO

REHABILITATION OF TOWER CITY BRIDGES
PROSPECT AVE., HURON ROAD,
WEST 2ND., 3RD. & 6TH. ST. VIADUCTS

GENERAL SUMMARY

CLEVELAND CUYAHOGA COUNTY OHIO

Mode LJD	Trcd. JSC.	Ckd. LJD	Rev. RAB	Revised 6-11-84
Date 3-16-83	Date 3-17-83	Date 3-17-83	Date 3-18-83	Sheet 17A / 170

FHWA REGION	STATE	PROJECT	
5	OHIO	M-ID99(9)	

17B / 170

CUYAHOGA COUNTY
HURON/PROSPECT BRIDGE

SUMMARY OF DECK PLAN QUANTITIES

LOCATIONS	Bid Item 202 Concrete Portions of Substructure Removed	Bid Item 202 Concrete Portions of Super-Structure Removed	Bid Item 202 Sidewalk, Wearing Course & Roadway Fill Concrete Removed	Bid Item 202 Wearing Course Removed	Bid Item 202 Structural Steel Portions of Structure Removed	Bid Item 202 Pipe Removed	Bid Item 202 Guard Rail Removed	Bid Item 202 Fence Removed	Bid Item 202 Fence Removed for Reuse		Bid Item 403 Asphalt Concrete (AC-20)	Bid Item 404 Asphalt Concrete (AC-20)	Bid Item 503 Unclassified Excavation	Bid Item 509 Reinforcing Steel Grade 60 As Per Plan	Bid Item 510 Dowel Holes	Bid Item 511 Class "C" Concrete Superstructure Fill, Including Wire Mesh	Bid Item 511 - Class S Concrete Superstructure Sidewalk Wearing Course, Including Wire Mesh	Bid Item 511 - Class S Concrete Superstructure Structural Deck-Complete Replacement, Safety Curb & Parap.	Bid Item 511 Class C Concrete Superstructure Structural Deck - Repairs	Bid Item 511 - Class C Concrete Superstructure Beam Fireproofing Including Wire Mesh	Bid Item Special Membrane Waterproofing As per Plan	Bid Item 513 Repairs To Existing Structural Steel AISC Category III	Bid Item 513 AISC ~~Category III~~ CERT. NOT REQ'D. Structural Steel For Curb Plates	Bid Item 513 AISC Cert. not Req'd. Structural Steel For Expansion Joint End Dam Framing.	Bid Item 514 Field Painting New Structural Steel, System B	Bid Item 514 Field Painting of Existing Steel Surface Preparation	Bid Item 514 Field Painting of Existing Steel Spot Prime	Bid Item 514 Field Painting of Existing Steel One Complete Coat - Prime	Bid Item 514 Field Painting of Existing Steel One Complete Coat - Finish	Bid Item 511 Class C Concrete Substructure (Wingwall)	Bid Item 516 Roadway Expansion Joint	Bid Item 516 Sidewalk Expansion Joint	Bid Item 516 Building Line Expansion Joint	Bid Item 202 Curb Removed	Bid Item 202 Walk Removed	Bid Item 304 Aggregate Base	Bid Item 604 Manhole Adjusted To Grade	Bid Item 607 Fence, Type 47	Bid Item 608 4" Concrete Walk	Bid Item 608 Curb Ramps	Bid Item 609 Curb, Standard Type 6
	C.Y.	C.Y.	C.Y.	S.Y.	Lbs.	Lump Sum	Lin. Ft.	Lin.Ft.	Lin.Ft.		C.Y.	C.Y.	C.Y.	Lbs.	Each	C.Y.	C.Y.	C.Y.	C.Y.	C.Y.	S.Y.	Lbs.	Lbs.	Lbs.	Lbs.	Lump Sum	Lump Sum	Lump Sum	Lump Sum	C.Y.	Lin.Ft.	Lin.Ft.	Lin.Ft.	Lin.Ft.	Sq.Ft.	Cu.Yds.	Each	Lin.Ft.	Sq.Ft.	Each	Lin.Ft.
PROSPECT AVE.																																									
UNIT 1		389	195	1,038	3,933			47			43	29	6	79,281	394		35	509			1,244	3,411	2,427	8,862	5,838					5	108	62	21	30	450	8	2	12	450	1	30
UNIT 2		339	143	641	8,062			90			28	18		55,117			35	369			852	6,895	2,020	6,755	8,915						68	32	90								
UNIT 3		326	137	654	3,865			87			28	18		58,644			34	355			914	3,927	1,943	6,755	5,870						68	32	86.5								
UNIT 4		39	151	718	847			57			30	20		629		103	38		47		1,005	471	2,130	6,755	2,601						68	32	136.5								
UNIT 5		105	146	689	42						29	19				95	37		124		978	42	2,042	6,755	2,084						68	32	183								
UNIT 6		112	218	945					24		43	29				230	43		47	50	1,246		2,533	10,035	2,533						103	56	173								
UNIT 7		18	198	937	624				140		38	26				175	50		25		1,330	910	2,843	6,755	3,753						68	32	248								
UNIT 8		25	143	684	1,856				34		28	18				125	36		32		963	1,700	2,094	6,755	3,794						68	32	181								
UNIT 9		82	198	937					124		38	26				175	50		84		1,330	46	2,878	6,755	2,924						68	32	248								
UNIT 10		84	193	862					24		35	23				208	35		76		1,124		2,239	11,779	2,239						103	56	152								
UNIT 11		15	161	745							30	20				142	40		22		1,057	26	2,278	6,729	2,304						68	32	63								
UNIT 12		15	149	692	127						29	19				132	37		22		974	126	2,105	6,729	2,231						68	32	121.5								
UNIT 13		18	67	382	3,118						17	11				61	21		25		531	3,240	1,389	3,315	4,629								95		250		1		250	1	
HURON RD.																																									
UNIT 14		128	57	403	18,162			67			17	11		30,035	210		3	137			327	12,606	975	2,846	13,581						68	18						25			
UNIT 15	13	458	182	972	38,076			129			41	27		85,871			27	398			1,172	25,226	2,878	5,691	28,104						68	18									
UNIT 16	6	199	193	1,033	46,337			137			43	29		(779) 28,174		136	28	22	191		1,265	26,921	3,054	5,691	29,975						68	18									
UNIT 17	4	154	177	1,018	8,158			125			42	28		(729) 73950		122	18	20	229		1,139	6,340	2,702	11,238	9,042						108	48	18								
UNIT 18		198	236	1,251	4,064			166			52	34		956		168	33	52	207		1,514	3,911	3,681	5,691	7,552						68	18	165.5								
UNIT 19		60	171	908	519			120			37	25		619		129	24	47	68		1,094	759	2,680	5,691	3,439						68	18	120.5								
UNIT 20		13	133	699	922			93			29	19		507		103	17	36	19		838	1,376	2,075	5,691	3,451						68	18	92.5								
UNIT 21		37	164	852				104	24		35	23		634		144	15	41	44		946		2,229	8,971	2,229						103	42	45.5								
UNIT 22		13	150	798	23			106	103		34	22		570		118	21	41	19		956	23	2,361	5,691	2,384						68	18	105.5								
UNIT 23		18	182	964	3,570			128			40	26		755		137	26	21	32		1,162	2,792	2,845	5,691	5,637						68	18	127.5								
UNIT 24		28	149	797	27			106	103		32	22		570		150	21	17	37	16	968	27	2,421	5,691	2,448						68	18	105.5								
UNIT 25		60	200	989	24			122	24		42	28		719		230	17	20	44	46	1,122	24	2,660	10,741	2,684						103	42	63								
UNIT 26		170	212	1,126				149			47	31		845		161	29	58	193		2,679		3,318	5,691	3,318						68	18	149								
UNIT 27	6	284	155	820	538			109			34	22		571		67	21	152	105		998	483	2,427	5,691	2,910						68	18	108.5								
UNIT 28	4	399	129	686	5,338			91			29	19		50,264			17	306			832	4,381	2,020	5,691	6,401						68	18	91								
UNIT 29	4	419	136	720	11,839			167			30	20		51,137			19	330			848	11,594	2,130	5,691	13,724						68	18	25								
UNIT 30	2	429	247	1,146	11,290		50	233			47	31		105,701	85		30	652			1,397	9,975	2,900	6,480	12,875						127	132		150	1970				1970	1	150
UNIT 31		206	85	609	8,812			136			20	14		36,391	221			213			609	7,298	1,547	2,846	8,845																
WEST 2ND ST.		47	227	932	947				238		40	26				189	73		47		1,519	834	5,406		6,240								460								
WEST 3RD ST.		16	227	932					238		40	26				189	73		16	2	1,519		5,406		5,406								478								
WEST 6TH ST.		755	213	1,191	1,890						50	34		123,528			63	494			1,822	8,980	5,360	4,159	11,486								239								
TOTALS	39	5,668	5,724	28,770	183,010		50	2,569	1,076		1,197	793	6	(684,852) 719,468	910	3,484	1,066	4,290	1,765	114	38,374	144,344	89,996	210,307	231,446					5	2,251	960	4,192.5	180	2,670	8	3	37	2,670	3	180

Revised May 24, 1983

Revised 6-11-84

EUTHENICS INC.
CONSULTING ENGINEERS
CLEVELAND OHIO

REHABILITATION OF TOWER CITY BRIDGES
PROSPECT AVE., HURON ROAD,
WEST 2ND., 3RD. & 6TH. ST. VIADUCTS
SUMMARY OF DECK
PLAN QUANTITIES

CLEVELAND CUYAHOGA COUNTY OHIO

Made LRH	Trcd. JSC	Chd. LJD	Rev. RAB	Revised 12-19-83
Date 5-3-82	Date 10-25-82	Date 10-26-82	Date 10-20-82	Sheet 17B/170

FHWA REGION	STATE	PROJECT	
5	OHIO	M-ID99(9)	

17C / 170

CUYAHOGA COUNTY
HURON/PROSPECT BRIDGE

SUMMARY OF DECK PLAN QUANTITIES

LOCATIONS	Bid Item 518 Porous Backfill	Bid Item 518 3"Ø Pipe Horizontal Conductors Including Specials	Bid Item 518 4"Ø Downspouts & Horizontal Conductors Including Specials	Bid Item 518 8"Ø Downspouts & Horizontal Conductors Including Specials	Bid Item 518 10"Ø Downspouts Including Specials	Bid Item 518 Subdrainage For Wearing Course, As Per Plan		Bid Item 519 Patching Concrete Structures	Bid Item 520 Pneumatically Placed Mortar	Bid Item 603 4" Conduit Type B, As Per Plan	Bid Item 603 8" Conduit Type B, As Per Plan	Bid Item 604 Catch Basin	Bid Item 604 Monument Assemblies, As Per Plan	Bid Item 607 Fence Type CL(60 inch Coated Chain Link Fence), As Per Plan	Bid Item 607 Fence Rebuilt, As Per Plan	Bid Item 607 Fence, Type Snow, As Per Plan	Bid Item 611 Approach Slabs, As per Plan	Bid Item Special Cleanout, Repair and Painting of Existing Drainage System	Bid Item Special Patching Existing Concrete Deck Slabs Less Than 1" Deep	Bid Item Special Patching Existing Concrete Deck Slabs Partial Depth	Bid Item Special Patching Existing Concrete Deck Slabs Full Depth	Bid Item Special Crack Repair in Existing Concrete Deck Slabs	Bid Item Special Security During Construction	Bid Item 824 Epoxy Coated Reinforced Steel	Bid Item Special Fence, Steel Frame and Wood Panel
	C.Y.	Lin.Ft.	Lin.Ft.	Lin.Ft.	Lin.Ft.	Lin.Ft.		Sq. Ft.	Sq. Ft.	Lin. Ft.	Lin.Ft.	Each	Each	Lin.Ft.	Lin.Ft.	Lin. Ft.	S.Y.	Lump Sum	Sq. Ft.	Sq. Ft.	Sq. Ft.	Lin.Ft.	Hrs.	Lbs.	Lin. Ft.
PROSPECT AVE.																									
UNIT 1	47		115	125		194		275	1,387				1				70							1,290	46
UNIT 2			109			176		107	-															1,052	90
UNIT 3		10				169		154	60															1,161	86.5
UNIT 4				20		186													264	263	263	7			54.5
UNIT 5			248			179													188	187	187	16			
UNIT 6			91			227						1							9	9	9				
UNIT 7						243									16				304	304	304	35			
UNIT 8						176									9				153	153	153	17			
UNIT 9						243													418	418	418				
UNIT 10						191													246	246	246				
UNIT 11			10			192													417	417	417				
UNIT 12						178													184	184	184				
UNIT 13						124							1						49	49	49				
HURON RD.																									
UNIT 14	26					87		68	650				1	76.0			42							1,207	
UNIT 15			51	18		253		268	71	7				128.5										(2,247)→2289	
UNIT 16		14	17	20		270		90	151			1		134.5					474	473	473			(1,795)→2562	
UNIT 17			86	5		228		45	13			1		128.8					383	383	382			(1,690)→2005	
UNIT 18						327		52	9					165.5					262	261	261			2,293	
UNIT 19						236								120.1					558	558	558			1,568	
UNIT 20						181								92.5					513	513	513	21		1,237	
UNIT 21			1	3		192								104.1					159	158	158			1,446	
UNIT 22						207								105.5					42	42	42	26		1,402	
UNIT 23						251								127.5					719	719	718			1,753	
UNIT 24						206								105.6					505	505	505	15		1,402	
UNIT 25						235								121.7					583	583	582			1,683	
UNIT 26			60			294						1		149.0					70	70	69	17		2,006	
UNIT 27		8	44			213		3				1		108.5					59	59	58			1,411	
UNIT 28				64		178		51	70		30			90.7										2,308	
UNIT 29		16	12			187		11	118					95.2										3,083	73
UNIT 30			5	36	12	271		102	345			1		107.0										4,310	103
UNIT 31						123		785	797				1	116.5			92							1,569	
WEST 2ND ST.						475													121	121	121	247			
WEST 3RD ST.						475													56	55	55	45			
WEST 6TH ST.			170	23		476		30	10															11,326	
TOTALS	73	48	1,019	314	12	7,843		2,041	3,681	7	30	6	4	2,077.2	25	200	204		6,735	6,730	6,725	446	3,000	(49,239) 50,363	453

LOCATIONS	Bid Item 202 Structural Steel Portions of Structure Removed	Bid Item 513 Repairs to Existing Structural Steel
	Lbs.	Lbs.
PROSPECT AVE. 72.5 Level		
UNIT 1	2,054	2,054
UNIT 2	2,737	1,939
UNIT 3	4,034	3,008
HURON RD. 72.5 Level		
UNIT 17	1,963	2,147
UNIT 18	2,430	2,598
UNIT 27	1,998	2,055
UNIT 28	7,571	7,563
UNIT 29	8,084	8,160
UNIT 30	14,552	15,159
UNIT 31	11,143	11,177
TOTALS	56,566	55,860

LOCATIONS	Bid Item 606 Temporary Beam Rail	Bid Item 622 Temporary Concrete Barrier	Bid Item Special Replacement Signs
	Lin. Ft.	Lin. Ft.	Sq. Ft.
CONSTRUCTION PHASE I-IA	212.5	830	
CONSTRUCTION PHASE II	162.5	220	
CONSTRUCTION PHASE III	37.5	590	
CONSTRUCTION PHASE IV	75.0	400	
CONSTRUCTION PHASE V-A-B	37.5	360	
CONSTRUCTION PHASE VI-A-B	-	940	
	*187.5	*160	
	712.5	3500	100

* Note:
Bid Item 606 Temporary Beam Rail Shall be Reused from Phase to Phase. An Additional 15 Guard Rail Elements Have Been Provided in the Quantity for Replacement to Damaged Elements. Bid Item 622 Temporary Concrete Barrier Shall be Reused from Phase to Phase. An Additional 16 Elements Have Been Provided in the Quantity for Replacement of Damaged Elements.

Revised May 24, 1983

EUTHENICS INC.
CONSULTING ENGINEERS
CLEVELAND OHIO

REHABILITATION OF TOWER CITY BRIDGES
PROSPECT AVE., HURON ROAD,
WEST 2ND., 3RD. & 6TH. ST. VIADUCTS
SUMMARY OF DECK
PLAN QUANTITIES

CLEVELAND CUYAHOGA COUNTY OHIO

Made LRH	Trcd. JSC	Ckd. LJD	Rev. RAB	Revised 6-11-84
Date 5-10-82	Date 10-25-82	Date 10-26-82	Date 10-28-82	Sheet 17C / 170

FHWA REGION	STATE	PROJECT	
5	OHIO	M-ID 99 (9)	

18
170

CUYAHOGA COUNTY
HURON/PROSPECT BRIDGE

Notes:
Remove Existing Concrete Walk, Backfill with Aggregate Base Item 304, to Subgrade of New Concrete Walk.
Exist. Gas Vent Pipe to be Removed by Others.

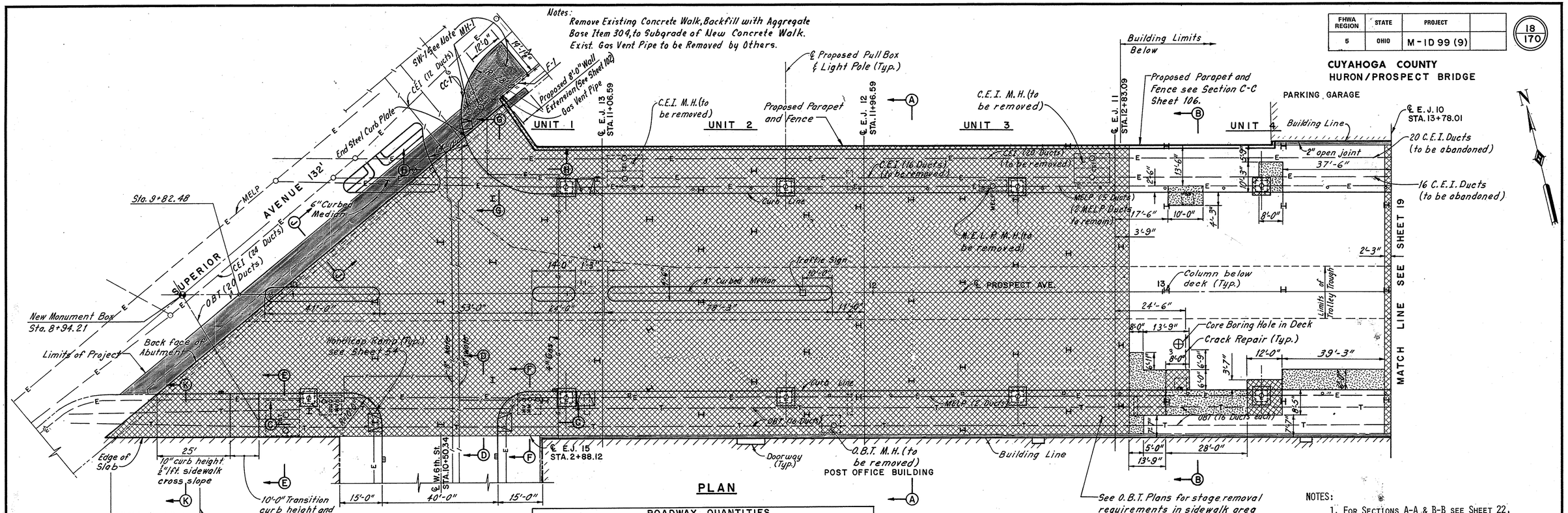

PLAN

ROADWAY QUANTITIES									
REF. NO.	202 CURB REMOVED	202 WALK REMOVED	304 AGGREGATE BASE	608 4" CONCRETE WALK	608 CURB RAMP	609 CURB STANDARD TYPE 6	604 MANHOLE ADJUSTED TO GRADE	607 FENCE TYPE 47	
	LIN.FT.	SQ.FT.	CU.YD.	SQ.FT.	EACH	LIN.FT.	EACH	LIN.FT.	
SW-1		450	8	450	1				
CC-1	30					30			
MH-1							2		
F-1								12	

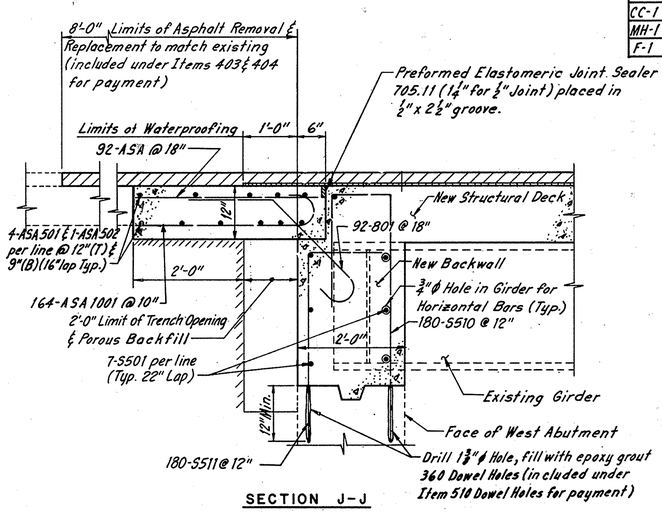

SECTION J-J

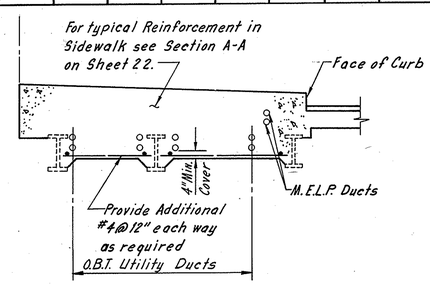

SECTION K-K

LEGEND

- Curb Drain
- New Style Light Pole
- Old Style Light Pole
- New Style Light Pole Base Only
- Old Style Light Pole Base Only
- Manhole
- Parking Meter
- Fire Hydrant
- Traffic Sign
- Traffic Signal Pole
- Electrical Ducts in Deck
- Telephone Ducts in Deck
- Vault in Deck
- Fence
- Water Line Under Deck
- Telegraph Ducts Under Deck
- Gas Line Under Deck
- Crack in Structural Deck
- Limits of Structural Deck
- Concrete to be Removed
- Area for Patching of Structural Deck Concrete (See Detailed Specifications)
- Existing Light Pull Box (To be Removed and Replaced)

NOTES:

1. For Sections A-A & B-B see Sheet 22.
2. For Sections C-C thru H-H see Sheet 23.
3. For Proposed Expansion Joint Details see Sheets 46 thru 53.
4. For Miscellaneous Deck Repair Details see Sheet 54.
5. 2'-0" Porous Backfill shall extend the full length of the backwall up to the bottom of the Approach Slab.
6. All parking meters on Prospect Ave. to be removed and not replaced.

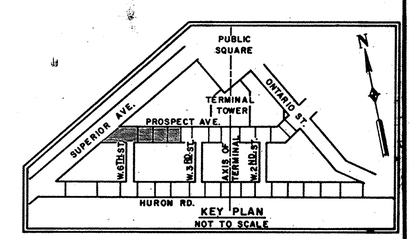

EUTHENICS INC.
CONSULTING ENGINEERS
CLEVELAND OHIO

REHABILITATION OF TOWER CITY BRIDGES
PROSPECT AVE., HURON ROAD, WEST 2ND., 3RD. & 6TH. ST. VIADUCTS
STREET SURFACE PLAN AND DECK REPAIR
UNIT 1 thru 4
PROSPECT AVE.
CLEVELAND CUYAHOGA COUNTY OHIO

Mode KRD	Trcd. JSC	Chd. LJD	Rev. RAB	Scale: 1/16" = 1'-0"
Date 1-27-82	Date 2-17-82	Date 6-7-82	Date 10-5-82	Sheet 18 / 170

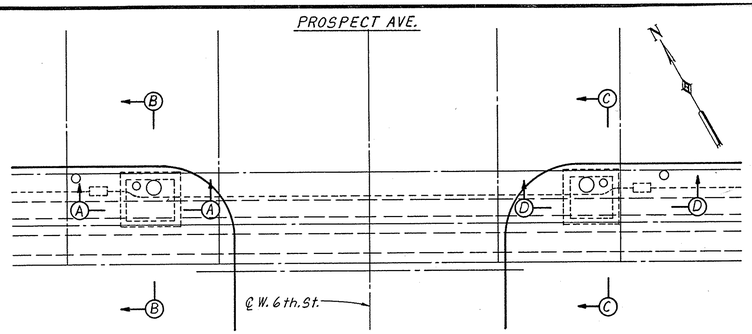

PLAN

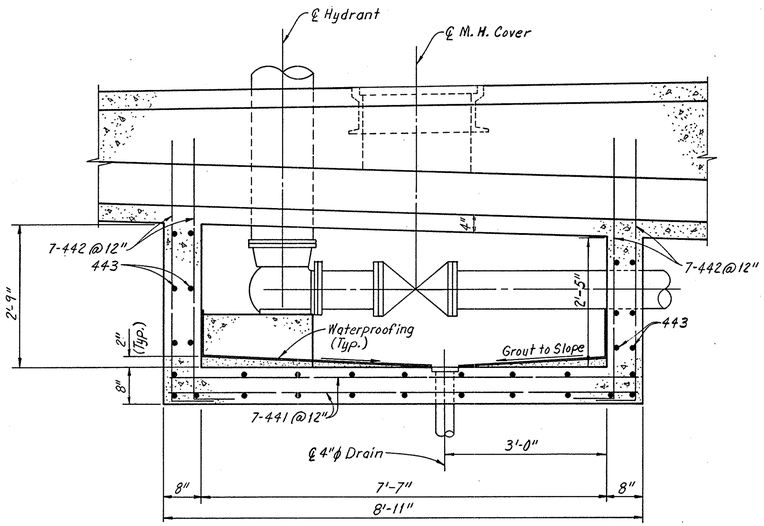

SECTION A-A

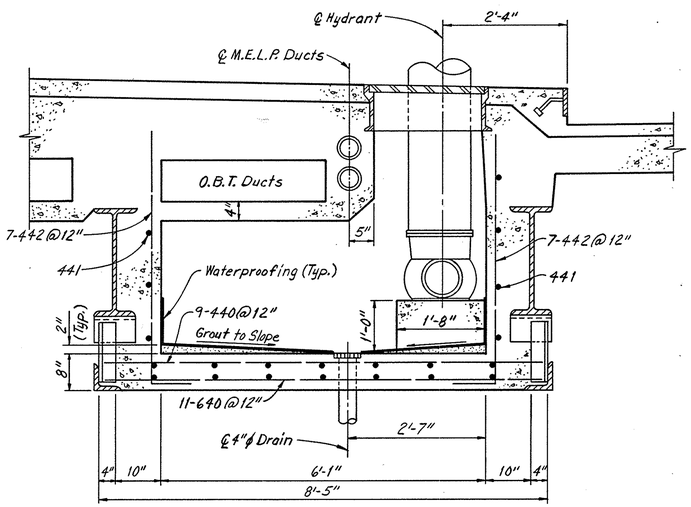

SECTION B-B

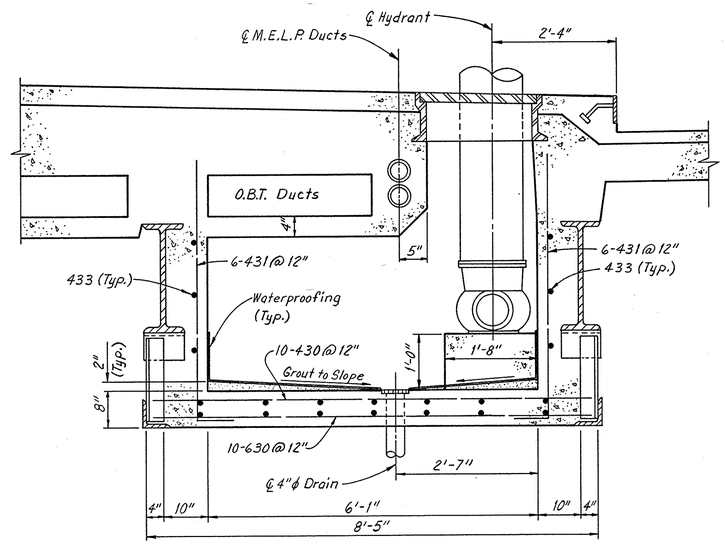

SECTION C-C

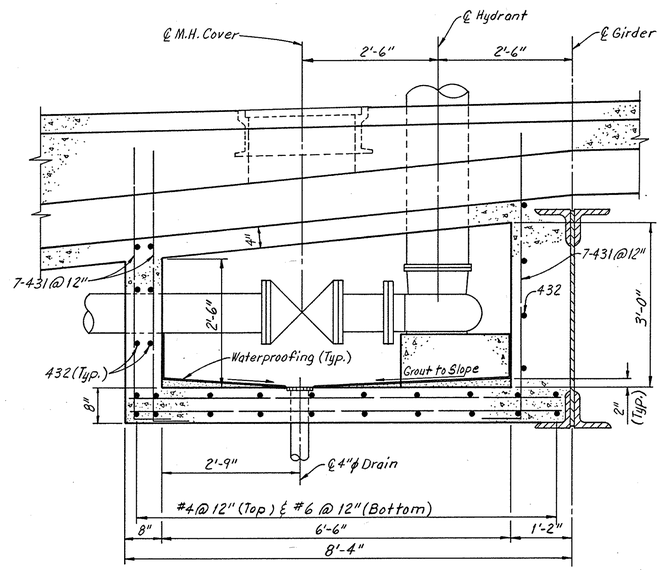

SECTION D-D

ADDITIONAL REPAIR AREAS		
FIRE HYDRANT VAULTS		
LOCATION	ITEM 202 REMOVAL CU. YDS.	ITEM 511 REPLACEMENT CU. YDS.
Southwest Corner of Prospect Ave. & W. 6th. St.	5	5
Southeast Corner of Prospect Ave. & W. 6th. St.	5	5

MARK	NO.	LENGTH	TYPE	SER. INCR.	WEIGHT (LBS.)
FIRE HYDRANT VAULT UNIT-1					
S.E. CORNER OF PROSPECT AVE. AT W. 6th. ST.					
SA 430	24	8'-0"	Str.		128
SA 431	33	5'-11"	5		130
SA 432	10	7'-5"	Str.		50
SA 433	6	8'-0"	Str.		32
SA 630	10	8'-0"	Str.		120
TOTAL WEIGHT =					460
FIRE HYDRANT VAULT UNIT-1					
S.W. CORNER OF PROSPECT AVE. AT W. 6th. ST.					
SA 440	9	8'-0"	Str.		48
SA 441	21	8'-6"	Str.		119
SA 442	42	5'-8"	5		159
SA 443	12	7'-5"	Str.		59
SA 640	11	8'-0"	Str.		132
TOTAL WEIGHT =					517

REINFORCING STEEL SAMPLES

REFER TO CMS SECTIONS 106.03, 700, 709.01 THROUGH 709.05 AND 709.08. SUFFICIENT ADDITIONAL REINFORCING STEEL SHALL BE PROVIDED FOR SAMPLING. RANDOM SAMPLES SHALL BE REPLACED IN THE STRUCTURES BY THE ADDITIONAL STEEL, SPLICED IN ACCORDANCE WITH 509.08.

NOTES:

REMOVAL ITEM SHALL BE PAID FOR AS PER "ITEM 202 - CONCRETE PORTIONS OF SUPERSTRUCTURE REMOVAL". SEE GENERAL NOTES SHEET 13/170.

REPLACEMENT ITEM SHALL BE PAID FOR AS PER "ITEM 511 - SUPERSTRUCTURE CONCRETE - STRUCTURAL DECK CONCRETE REPAIRS". SEE GENERAL NOTES SHEET 14/170.

THE UNIT PRICE BID SHALL INCLUDE THE FULL COST OF ALL LABOR, MATERIALS AND EQUIPMENT NECESSARY TO COMPLETE THE WORK AS SHOWN ON THE PLANS TO INCLUDE GROUT, WATERPROOFING AND FLOOR DRAIN.

Added 1-31-85

FHWA REGION	STATE	PROJECT	
5	OHIO	IX-ID99(9)	

18A

CUYAHOGA COUNTY
HURON/PROSPECT BRIDGE

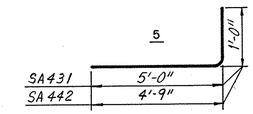

EUTHENICS INC.
CONSULTING ENGINEERS
CLEVELAND OHIO

REHABILITATION OF TOWER CITY BRIDGES
PROSPECT AVE., HURON ROAD,
WEST 2ND., 3RD. & 6TH. ST. VIADUCTS

FIRE HYDRANT VAULTS
PROSPECT AVE.
PHASE III

CLEVELAND CUYAHOGA COUNTY OHIO

Mode LJD	Trcd. JSC	Ckd. JSC	Rev. RAB	Scale:
Date 1-11-85	Date 1-16-85	Date 1-16-85	Date 1-17-85	Sheet 18A

ODOT 1-29-85 TES

FHWA REGION	STATE	PROJECT	
5	OHIO	IX-ID99(9)	

18B

CUYAHOGA COUNTY
HURON/PROSPECT BRIDGE

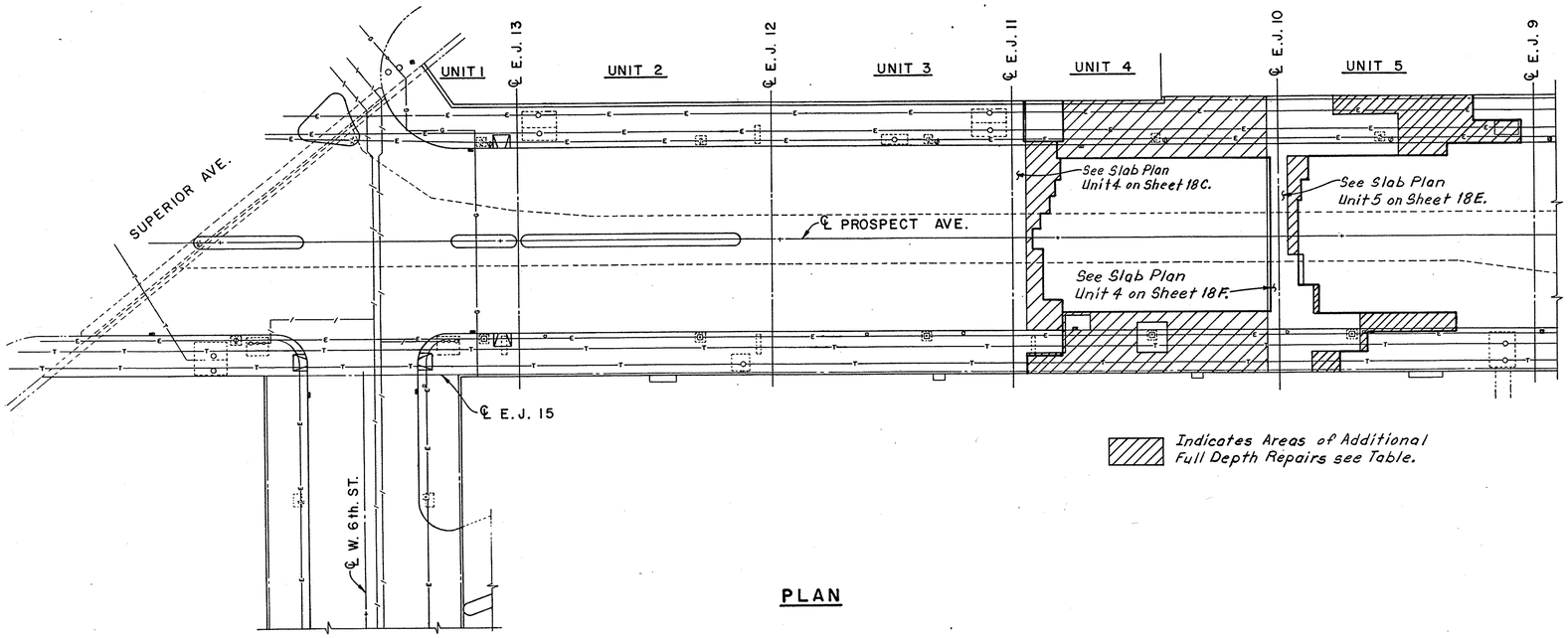

Indicates Areas of Additional Full Depth Repairs see Table.

PLAN

ADDITIONAL AREAS REPAIRED	
ITEM SPECIAL - PATCHING EXISTING CONCRETE DECK - SLABS FULL DEPTH	
LOCATION	SQ.FT.
Unit 5	
E.J. 10	529.02
Total Unit 5	529.02
Unit 4	
E.J. 10	3,264.78
E.J. 11	487.07
Total Unit 4	3,751.85

Sheet added 5-9-85

EUTHENICS INC.
CONSULTING ENGINEERS
CLEVELAND OHIO

REHABILITATION OF TOWER CITY BRIDGES
PROSPECT AVE., HURON ROAD,
WEST 2ND., 3RD. & 6TH. ST. VIADUCTS

SLAB PLAN

UNITS 1 THRU 5 & PART OF W. 6th. ST.
PROSPECT AVE. PHASE III

CLEVELAND CUYAHOGA COUNTY OHIO

Made JSC	Trcd. JSC	Ckd. LJD	Rev. RAB	Scale:
Date 4-25-85	Date 4-25-85	Date 4-26-85	Date 4-26-85	Sheet 18B

ODOT 4-26-85 TES

FHWA REGION	STATE	PROJECT	
5	OHIO	IX-ID99(9)	

18C

CUYAHOGA COUNTY
HURON/PROSPECT BRIDGE

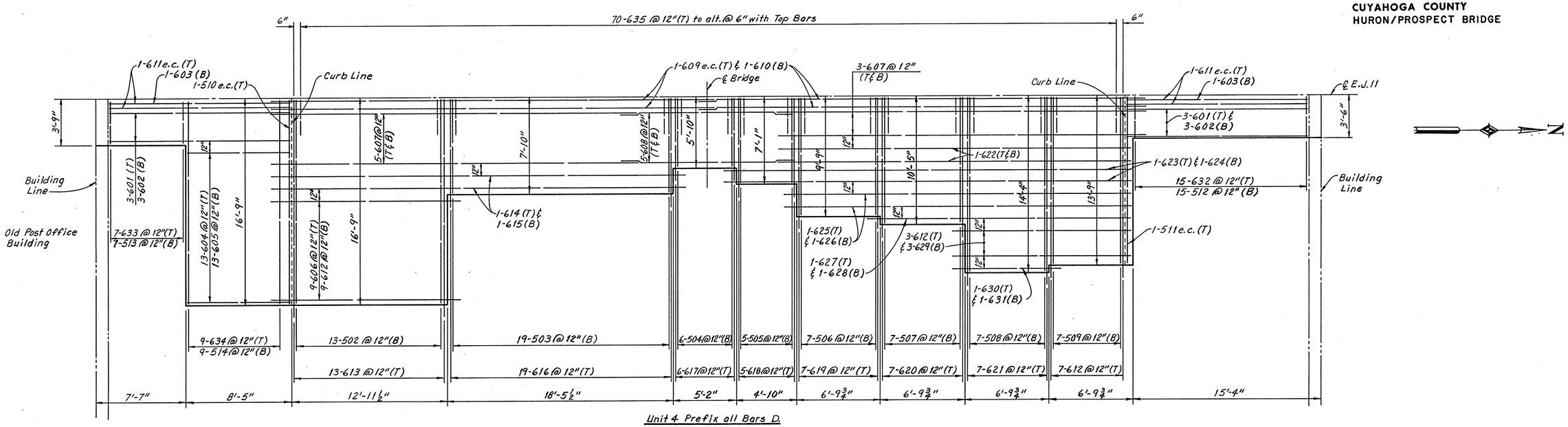

Unit 4 Prefix all Bars D.

SLAB PLAN
(Unit 4 E.J. 11)

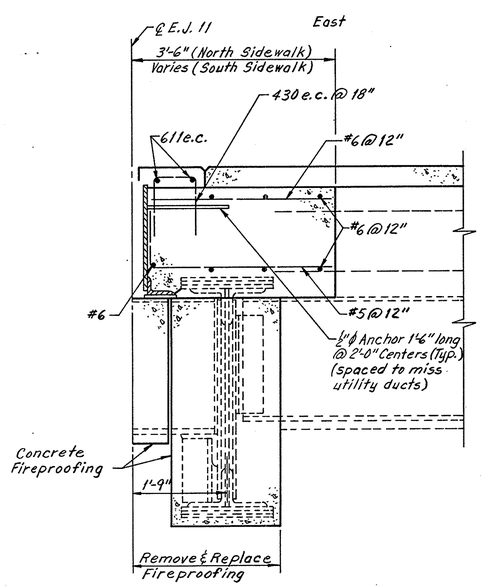

SIDEWALK EXPANSION JOINT

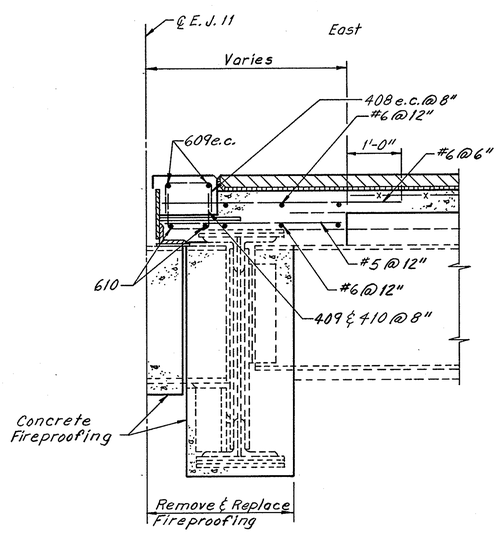

ROADWAY EXPANSION JOINT

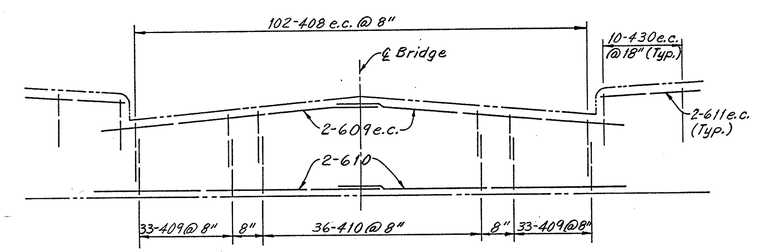

STIRRUP REINFORCEMENT PLACEMENT AT EXPANSION JOINT
(East Side of E.J. 11 Only)

NOTES:
1.) For Plan see Sheet 18B.
2.) For Reinforcement Schedule see Sheet 18D.
3.) All # 5 Bars shall be spliced 16".
4.) All # 6 Bars shall be spliced 17".
5.) The following abbreviations are used:
(T) = Top (B) = Bottom
(T & B) = Top & Bottom
(Typ.) = Typical ALT. = Alternate

Sheet added 3-20-85

EUTHENICS INC.
CONSULTING ENGINEERS
CLEVELAND OHIO

REHABILITATION OF TOWER CITY BRIDGES
PROSPECT AVE., HURON ROAD,
WEST 2ND., 3RD. & 6TH. ST. VIADUCTS

SLAB PLAN

E.J. II UNIT 4

PHASE III

CLEVELAND CUYAHOGA COUNTY OHIO

Made JSC	Trcd. JSC	Ckd. LJD	Rev. RAB	Scale:
Date 3-11-85	Date 3-12-85	Date 3-13-85	Date 3-13-85	Sheet 18C

ODOT 3-13-85 TES

FHWA REGION	STATE	PROJECT	
5	OHIO	IX-ID99(9)	

18D

CUYAHOGA COUNTY
HURON/PROSPECT BRIDGE

MARK	NO.	LENGTH	TYPE	SER. INCR.	WEIGHT (LBS.)
UNIT-4 EAST SIDE OF E.J. 11 PROSPECT					
*D408	102	2'-6"	6		*170
D409	66	2'-6"	6		110
D410	36	3'-2"	6		76
*D430	20	2'-4"	6		*31
D502	13	16'-4"	Str.		221
D503	19	7'-5"	Str.		147
D504	6	5'-5"	Str.		34
D505	5	6'-8"	Str.		35
D506	7	9'-4"	Str.		68
D507	7	10'-0"	Str.		73
D508	7	13'-11"	Str.		102
D509	7	13'-4"	Str.		97
*D510	1	16'-4"	Str.		*17
*D511	1	13'-4"	Str.		*14
D512	15	4'-3"	5		66
D513	7	4'-6"	5		33
D514	9	17'-6"	5		164
D601	6	16'-0"	1		144
D602	6	15'-4"	2		138
D603	2	14'-8"	Str.		44
D604	13	8'-9"	2		171
D605	13	8'-1"	Str.		158
D606	9	15'-8"	Str.		212
D607	16	30'-0"	Str.		721
D608	10	14'-2"	Str.		213
*D609	4	36'-4"	Str.		*218
D610	4	36'-4"	Str.		218
*D611	4	14'-8"	Str.		*88
D612	19	14'-6"	Str.		414
D613	13	17'-6"	Str.		342
D614	2	33'-10"	Str.		102
D615	2	32'-8"	Str.		98

MARK	NO.	LENGTH	TYPE	SER. INCR.	WEIGHT (LBS.)
D616	19	8'-7"	Str.		245
D617	6	6'-7"	Str.		59
D618	5	7'-10"	Str.		59
D619	7	10'-6"	Str.		110
D620	7	11'-2"	Str.		117
D621	7	15'-1"	Str.		159
D622	4	28'-11"	Str.		174
D623	2	32'-11"	Str.		99
D624	2	31'-9"	Str.		95
D625	2	28'-1"	Str.		84
D626	2	26'-11"	Str.		81
D627	1	21'-3"	Str.		32
D628	1	20'-1"	Str.		30
D629	3	13'-4"	Str.		60
D630	1	8'-10"	Str.		13
D631	1	6'-6"	Str.		10
D632	15	3'-1"	Str.		69
D633	7	3'-4"	Str.		35
D634	9	16'-4"	Str.		221
D635	70	3'-0"	Str.		315
*Total Weight Epoxy Coated				=	*538
Total Weight Non-Epoxy Coated				=	6,268

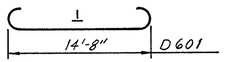

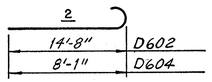

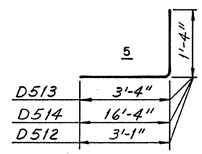

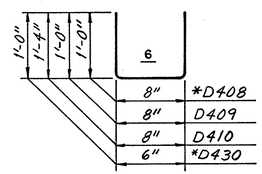

*INDICATES EPOXY COATED BARS.

REINFORCING STEEL SAMPLES

REFER TO CMS SECTIONS 106.03, 700, 709.01 THROUGH 709.05 AND 709.08. SUFFICIENT ADDITIONAL REINFORCING STEEL SHALL BE PROVIDED FOR SAMPLING. RANDOM SAMPLES SHALL BE REPLACED IN THE STRUCTURES BY THE ADDITIONAL STEEL, SPLICED IN ACCORDANCE WITH 509.08.

Sheet added 3-20-85

EUTHENICS INC.
CONSULTING ENGINEERS
CLEVELAND OHIO

REHABILITATION OF TOWER CITY BRIDGES
PROSPECT AVE., HURON ROAD,
WEST 2ND., 3RD. & 6TH. ST. VIADUCTS
REINFORCEMENT SCHEDULE
AND DETAILS
E.J. II UNIT 4
PHASE III

CLEVELAND CUYAHOGA COUNTY OHIO

Made JSC	Trcd. JSC	Ckd. LJD	Rev. RAB	Scale:
Date 3-11-85	Date 3-12-85	Date 3-13-85	Date 3-13-85	Sheet 18D

ODOT 3-13-85 TES

FHWA REGION	STATE	PROJECT	
5	OHIO	IX-ID99(9)	

18E

CUYAHOGA COUNTY
HURON/PROSPECT BRIDGE

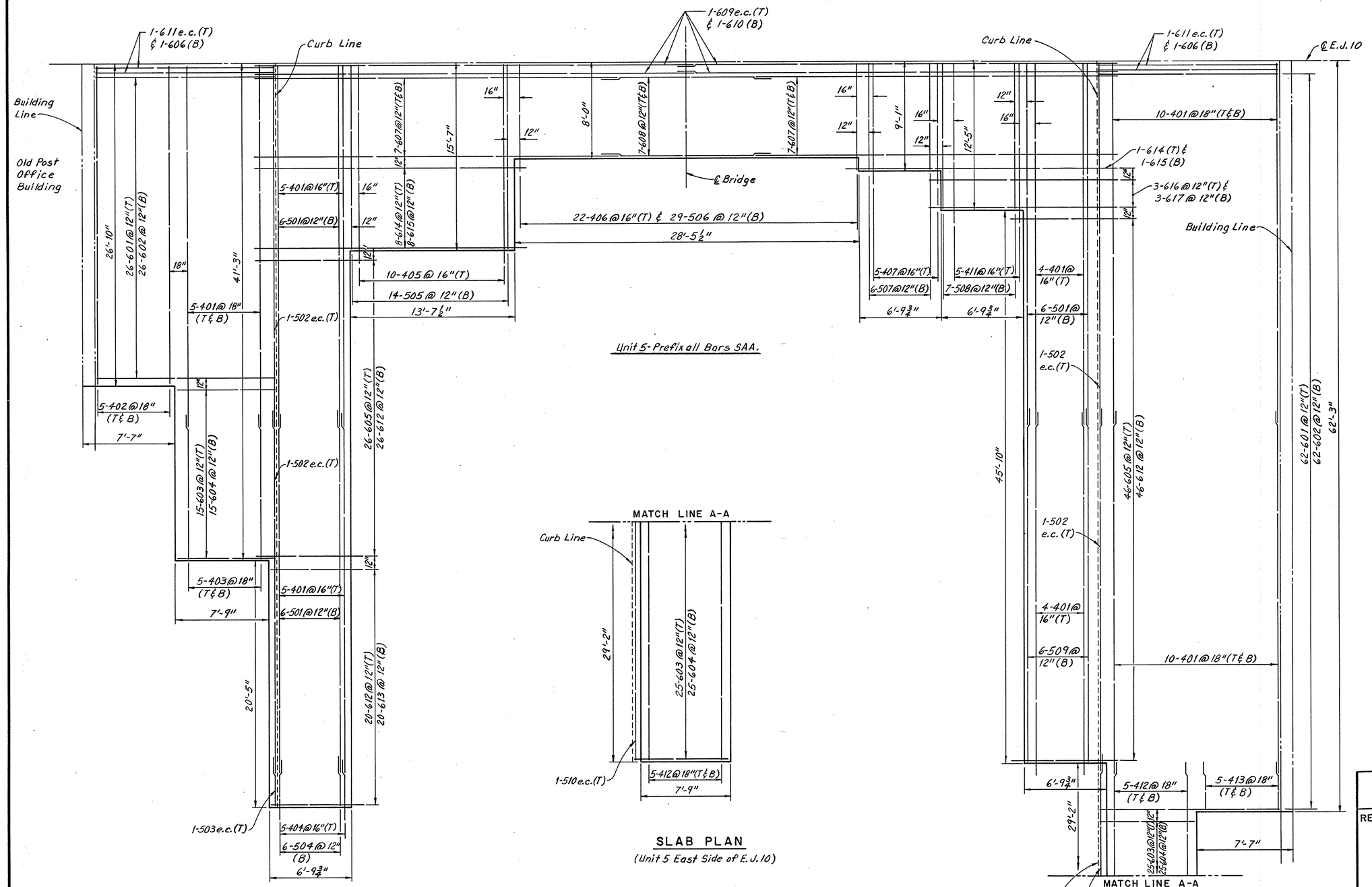

SLAB PLAN
(Unit 5 East Side of E.J.10)

NOTES:
1) For Plan see Sheet 18B.
2) For Reinforcement Schedule and Details see Sheet 18G.
3) All #4 Bars shall be spliced 12".
4) All #5 Bars shall be spliced 16".
5) All #6 Bars shall be spliced 17".
6) The following abbreviations are used:
(T) = Top (B) = Bottom
(T & B) = Top & Bottom
(Typ.) = Typical E.C. = Epoxy Coated

Sheet added 5-9-85

EUTHENICS INC.
CONSULTING ENGINEERS
CLEVELAND OHIO

REHABILITATION OF TOWER CITY BRIDGES
PROSPECT AVE., HURON ROAD, WEST 2ND., 3RD. & 6TH. ST. VIADUCTS

SLAB PLAN

EAST SIDE OF E.J.10 UNIT 5
PHASE III

CLEVELAND	CUYAHOGA COUNTY	OHIO

Mode JSC	Trcd. JSC	Ckd. LJD	Rev. RAB	Scale:
Date 4-16-85	Date 4-17-85	Date 4-17-85	Date 4-18-85	Sheet 18E

ODOT 4-26-85 TES

FHWA REGION	STATE	PROJECT	
5	OHIO	IX-ID99(9)	

18F

CUYAHOGA COUNTY
HURON/PROSPECT BRIDGE

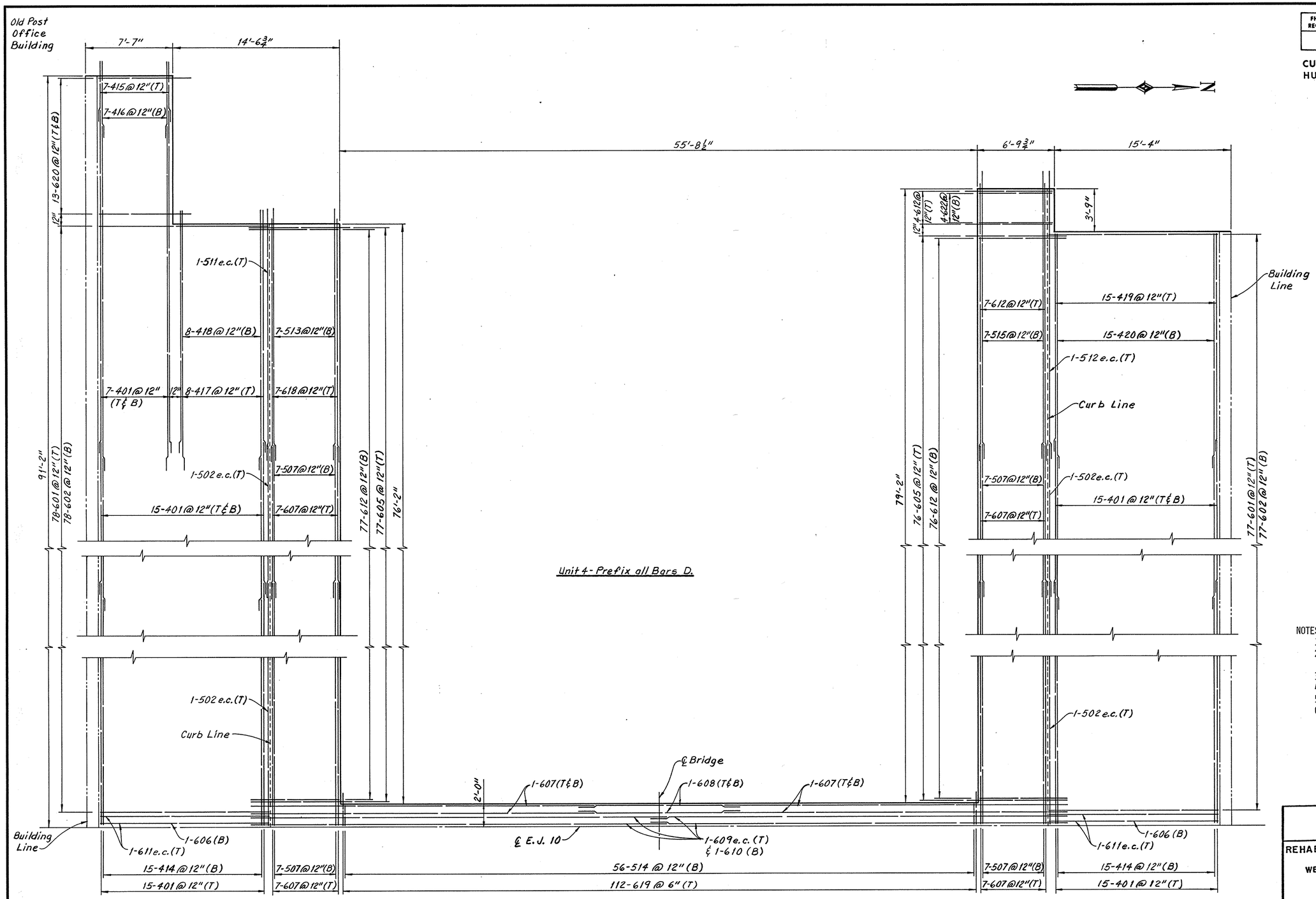

SLAB PLAN
(Unit 4 West Side of E.J. 10)

Sheet added 5-9-85

NOTES:
1) For Plan see Sheet 18B.
2) For Reinforcement Schedule & Details see Sheet 18G.
3) All #4 Bars shall be spliced 12".
4) All #5 Bars shall be spliced 16".
5) All #6 Bars shall be spliced 17".
6) The following abbreviations are used:
(T) = Top (B) = Bottom
(T & B) = Top & Bottom
(Typ.) = Typical E.C. = Epoxy Coated

EUTHENICS INC.
CONSULTING ENGINEERS
CLEVELAND OHIO

REHABILITATION OF TOWER CITY BRIDGES
PROSPECT AVE., HURON ROAD,
WEST 2ND., 3RD. & 6TH. ST. VIADUCTS

SLAB PLAN

WEST SIDE OF E.J. 10 UNIT 4
PHASE III

CLEVELAND CUYAHOGA COUNTY OHIO

Mode JSC	Trcd. JSC	Ckd. LJD	Rev. RAB	Scale:
Date 4-25-85	Date 4-25-85	Date 4-25-85	Date 4-26-85	Sheet 18F

ODOT 4-26-85 TES

MARK	NO.	LENGTH	TYPE	SER. INCR.	WEIGHT (LBS.)
UNIT-5 EAST SIDE OF E.J. 10 PROSPECT					
SAA 401	68	30'-0"	Str.		1,363
SAA 402	10	26'-5"	Str.		176
SAA 403	10	11'-10"	Str.		79
SAA 404	5	4'-5"	Str.		15
SAA 405	10	16'-4"	Str.		109
SAA 406	22	8'-9"	Str.		129
SAA 407	5	9'-10"	Str.		33
*SAA 408	149	2'-6"	6		*249
SAA 409	84	2'-6"	6		140
SAA 410	65	3'-2"	6		137
SAA 411	5	13'-2"	Str.		44
SAA 412	10	29'-0"	Str.		194
SAA 413	10	3'-10"	Str.		26
*SAA 430	36	2'-4"	6		*56
SAA 432	36	3'-0"	6		72
SAA 501	18	30'-0"	Str.		563
*SAA 502	4	30'-0"	Str.		*125
*SAA 503	1	3'-11"	Str.		*4
SAA 504	6	3'-11"	Str.		25
SAA 505	14	15'-2"	Str.		221
SAA 506	29	7'-7"	Str.		229
SAA 507	6	8'-8"	Str.		54
SAA 508	7	12'-0"	Str.		88
SAA 509	6	29'-2"	Str.		183
*SAA 510	1	29'-8"	Str.		*31
SAA 601	88	16'-0"	1		2,115
SAA 602	88	15'-4"	2		2,027
SAA 603	40	8'-9"	2		526
SAA 604	40	8'-1"	Str.		486
SAA 605	72	8'-10"	Str.		955
SAA 606	4	14'-8"	Str.		88
SAA 607	28	30'-0"	Str.		1,262
SAA 608	14	14'-2"	Str.		298
*SAA 609	4	36'-4"	Str.		*218
SAA 610	4	36'-4"	Str.		218
*SAA 611	4	14'-8"	Str.		*88
SAA 612	92	7'-8"	Str.		1,059
SAA 613	20	6'-6"	Str.		195
SAA 614	9	22'-5"	Str.		303
SAA 615	9	21'-3"	Str.		287
SAA 616	3	15'-7"	Str.		70
SAA 617	3	14'-5"	Str.		65
*Total Weight Epoxy Coated Bars =					*771
Total Weight Non-Epoxy Coated Bars =					13,834

MARK	NO.	LENGTH	TYPE	SER. INCR.	WEIGHT (LBS.)
UNIT-4 WEST SIDE OF E.J. 10 PROSPECT					
D401	104	30'-0"	Str.		2,084
*D408	102	2'-6"	6		*170
D409	60	2'-6"	6		100
D410	42	3'-2"	6		89
D414	30	30'-0"	5		601
D415	7	5'-1"	Str.		24
D416	7	6'-4"	Str.		30
D417	8	21'-1"	Str.		113
D418	8	22'-4"	Str.		119
D419	15	19'-0"	Str.		190
D420	15	20'-1"	Str.		201
*D430	20	2'-4"	6		*31
*D502	4	30'-0"	Str.		*125
D507	28	30'-0"	Str.		876
*D511	1	21'-11"	Str.		*23
*D512	1	25'-2"	Str.		*26
D513	7	21'-11"	Str.		160
D514	56	1'-7"	Str.		92
D515	7	25'-1"	Str.		183
D601	155	16'-0"	1		3,725
D602	155	15'-4"	2		3,576
D605	153	8'-10"	Str.		2,030
D606	2	14'-8"	Str.		44
D607	36	30'-0"	Str.		1,622
D608	4	14'-2"	Str.		85
*D609	4	36'-4"	Str.		*218
D610	4	36'-4"	Str.		218
*D611	4	14'-8"	Str.		*88
D612	157	7'-8"	Str.		1,808
D618	7	21'-2"	Str.		223
D619	112	2'-9"	Str.		463
D620	26	8'-8"	2		338
D621	7	24'-2"	Str.		254
D622	4	6'-6"	Str.		39
*Total Weight Epoxy Coated Bars =					*681
Total Weight Non-Epoxy Coated Bars =					19,281

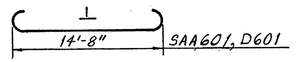

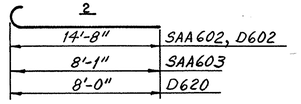

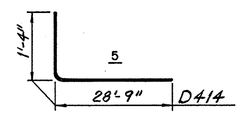

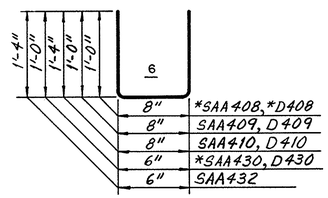

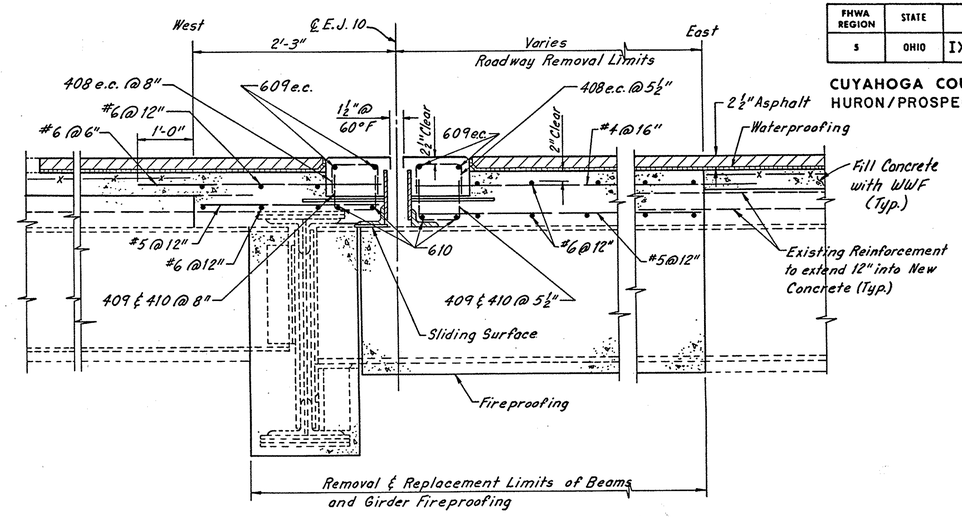

ROADWAY EXPANSION JOINT

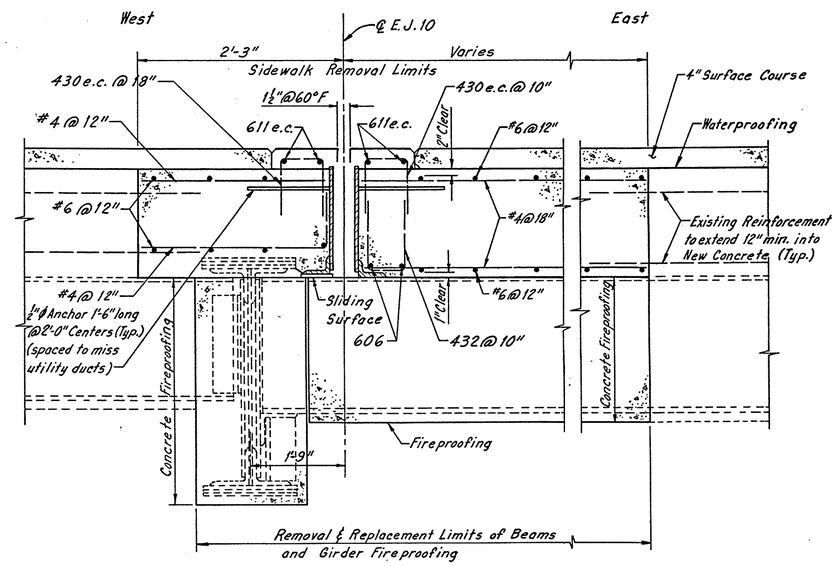

SIDEWALK EXPANSION JOINT

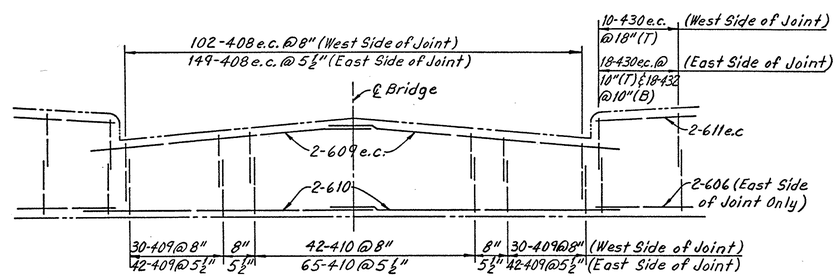

STIRRUP REINFORCEMENT PLACEMENT AT EXPANSION JOINT

Sheet added 5-9-85

* INDICATES EPOXY COATED BARS.

REINFORCING STEEL SAMPLES

REFER TO CMS SECTIONS 106.03, 700, 709.01 THROUGH 709.05 AND 709.08. SUFFICIENT ADDITIONAL REINFORCING STEEL SHALL BE PROVIDED FOR SAMPLING. RANDOM SAMPLES SHALL BE REPLACED IN THE STRUCTURES BY THE ADDITIONAL STEEL, SPLICED IN ACCORDANCE WITH 509.08.

FHWA REGION	STATE	PROJECT	
5	OHIO	IX-ID99(9)	

18G

CUYAHOGA COUNTY
HURON/PROSPECT BRIDGE

EUTHENICS INC.
CONSULTING ENGINEERS
CLEVELAND OHIO

REHABILITATION OF TOWER CITY BRIDGES
PROSPECT AVE., HURON ROAD,
WEST 2ND., 3RD. & 6TH. ST. VIADUCTS
REINFORCEMENT SCHEDULE AND DETAILS
E.J.10 UNITS 4 & 5
PHASE III

CLEVELAND CUYAHOGA COUNTY OHIO

Made JSC	Trcd. JSC	Ckd. LJD	Rev. RAB	Scale:
Date 4-16-85	Date 4-17-85	Date 4-17-85	Date 4-16-85	Sheet 18G

ODOT 4-26-85 TES

FHWA REGION	STATE	PROJECT	
5	OHIO	M-ID 99 (9)	

19 / 170

CUYAHOGA COUNTY
HURON/PROSPECT BRIDGE

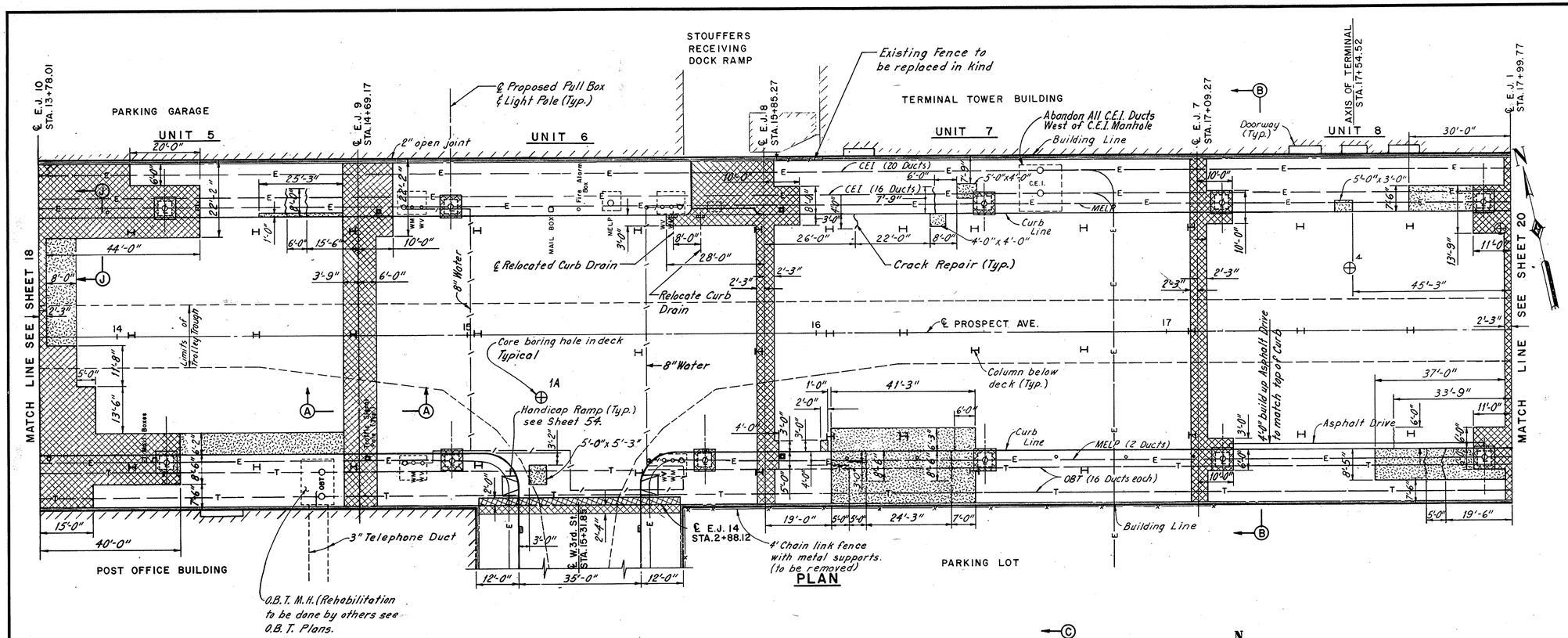

PLAN

LEGEND

- Curb Drain
- New Style Light Pole
- Old Style Light Pole
- New Style Light Pole Base Only
- Old Style Light Pole Base Only
- Manhole
- Parking Meter
- Fire Hydrant
- Traffic Sign
- Traffic Signal Pole
- Electrical Ducts in Deck
- Telephone Ducts in Deck
- Vault in Deck
- Fence
- Water Line Under Deck
- Telegraph Ducts Under Deck
- Gas Line Under Deck
- Crack in Structural Deck
- Limits of Structural Deck Concrete to be Removed
- Area for Patching of Structural Deck Concrete (See Detailed Specifications)
- Existing Light Pull Box (To be removed and replaced)

NOTES:

1. For Section B-B see Sheet 22.
2. For Typical Expansion Joint Details see Sheets 46 thru 53.
3. For Typical Light Pull Box Details see Sheet 122.
4. For full depth repair of Sidewalk see Section A-A on Sheet 22.
5. For Section J-J see Sheet 32.
6. All parking meters on Prospect Ave. to be removed and not replaced.

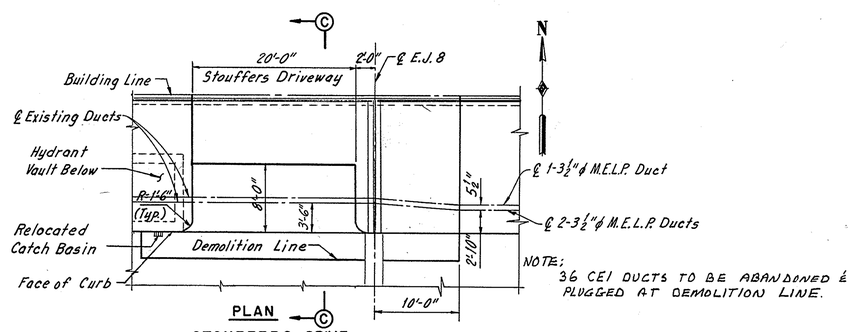

PLAN
STOUFFERS DRIVE

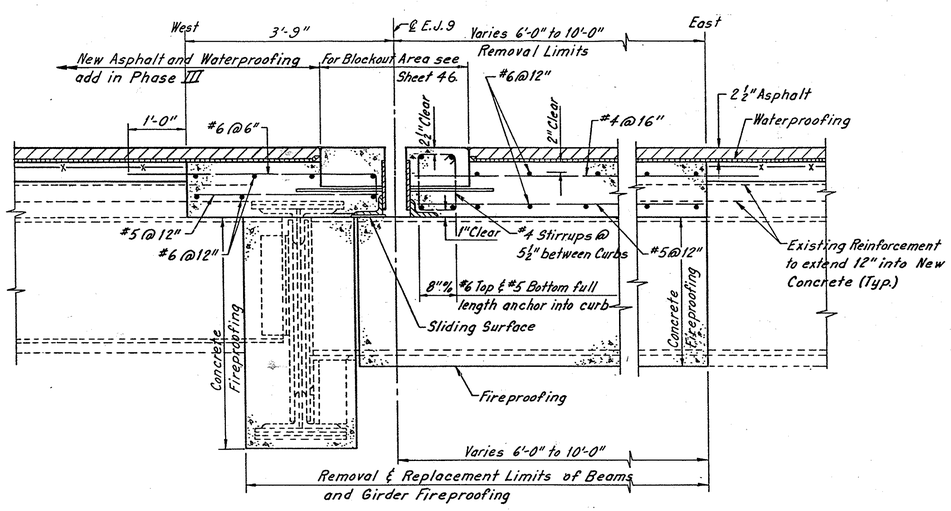

SECTION A-A

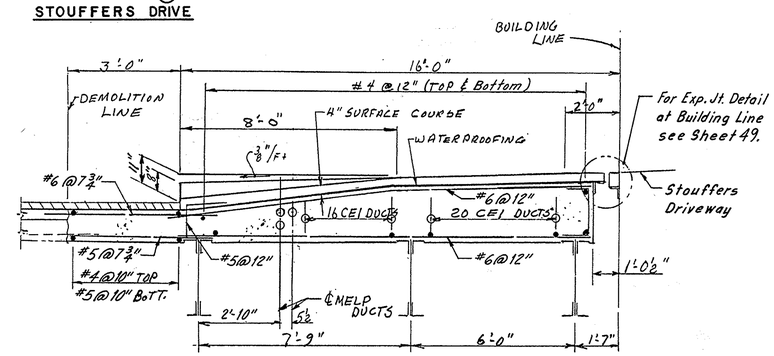

SECTION C-C

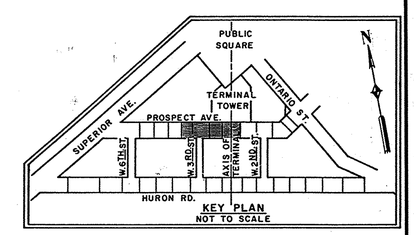

KEY PLAN
NOT TO SCALE

EUTHENICS INC.
CONSULTING ENGINEERS
CLEVELAND OHIO

REHABILITATION OF TOWER CITY BRIDGES
PORTIONS OF PROSPECT AVE., HURON RD., WEST 2ND., 3RD. & 6TH. ST. VIADUCTS

STREET SURFACE PLAN AND DECK REPAIR
UNIT 5 thru 8
PROSPECT AVE.

CLEVELAND CUYAHOGA COUNTY OHIO

Made KRD	Trcd. JSC	Ckd. LJD	Rev. RAB	Scale: 1/16" = 1'-0"
Date 1-11-82	Date 2-3-82	Date 6-7-82	Date 10-5-82	Sheet 19 / 170

FHWA REGION	STATE	PROJECT	
5	OHIO	IX-ID99(9)	

19A

CUYAHOGA COUNTY
HURON/PROSPECT BRIDGE

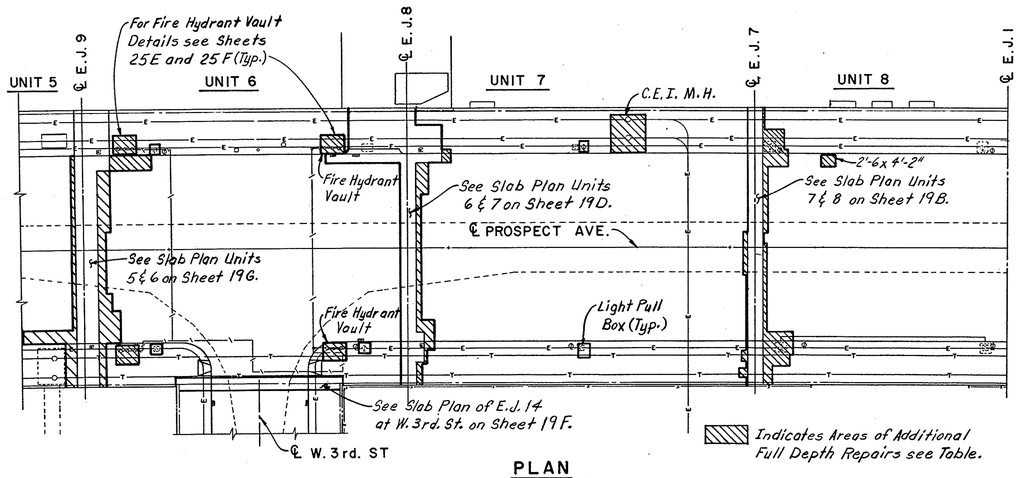

PLAN

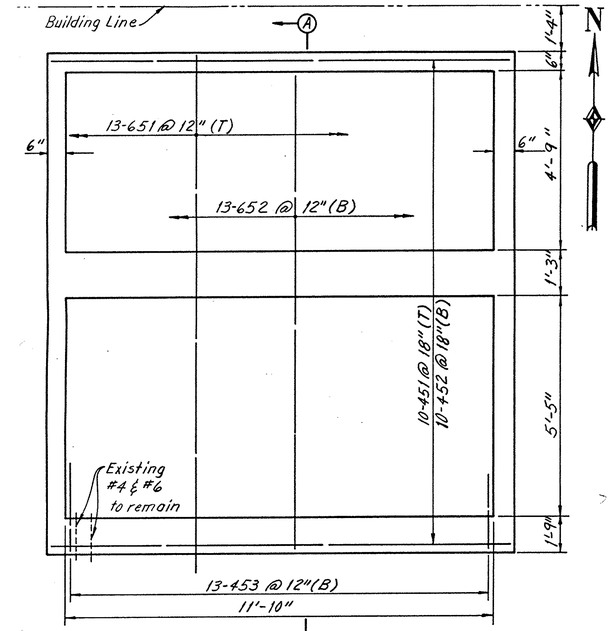

SLAB PLAN
(C.E.I. Manhole Roof North Sidewalk Prospect)
Unit 7

ADDITIONAL AREA REPAIRED	
ITEM SPECIAL-PATCHING EXISTING CONCRETE DECK-SLABS FULL DEPTH	
LOCATION	SQ. FT.
Unit 8	10.42
E.J. 7	10.34
Total Unit 8	20.76
Unit 7	0
E.J. 7	0
C.E.I. Manhole Roof	175.39
E.J. 8	134.11
Total Unit 7	309.5
Unit 6	
E.J. 8	53.64
Fire Hydrant Vault Roof & East Wall North Side	96.23
Fire Hydrant Vault Roof South Side	70.40
E.J. 9	423.67
Fire Hydrant Vault Roof N.E. Side of E.J. 9	70.40
Fire Hydrant Vault Roof S.E. Side of E.J. 9	70.40
Total Unit 6	784.74
Unit 5	0
E.J. 9	132.11
Total Unit 5	132.11
West 3rd. Street	150.9
E.J. 14 North Side	0
E.J. 14 South Side	170.58

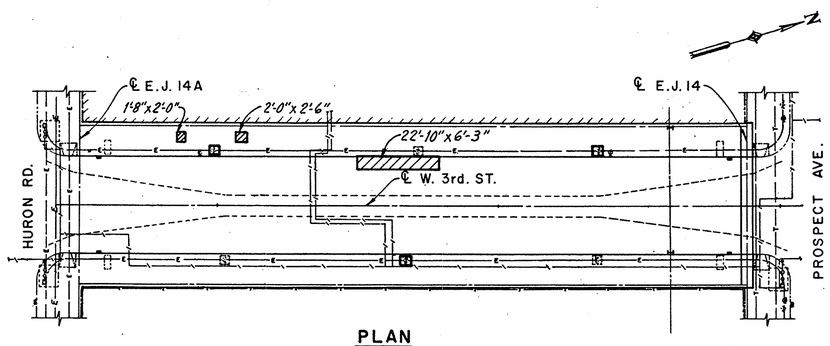

PLAN

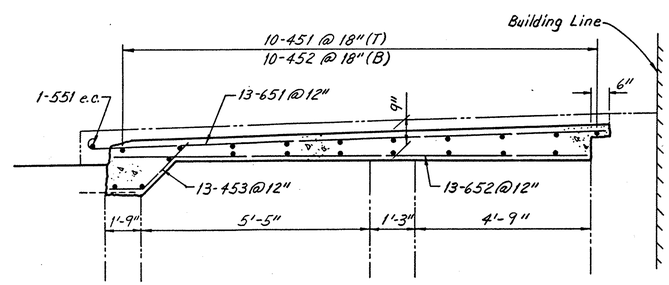

SECTION A-A

NOTES:
1.) For Reinforcement Schedule see Sheet 19C.
2.) The following abbreviations are used:
(T) = Top (B) = Bottom
e.c. = Epoxy Coated

Sheet added 3-20-85

EUTHENICS INC.
CONSULTING ENGINEERS
CLEVELAND OHIO

REHABILITATION OF TOWER CITY BRIDGES
PROSPECT AVE., HURON ROAD,
WEST 2ND., 3RD. & 6TH. ST. VIADUCTS
SLAB PLAN
UNITS 5 THRU 8 & W. 3rd. ST.
PROSPECT AVE. PHASE II

CLEVELAND CUYAHOGA COUNTY OHIO

Made JSC	Trcd. JSC	Ckd. LJD	Rev. RAB	Scale:
Date 2-28-85	Date 2-28-85	Date 3-1-85	Date 3-1-85	Sheet 19A

ODOT 3-8-85 TES

FHWA REGION	STATE	PROJECT	
5	OHIO	IX-ID99 (9)	

19B

CUYAHOGA COUNTY
HURON/PROSPECT BRIDGE

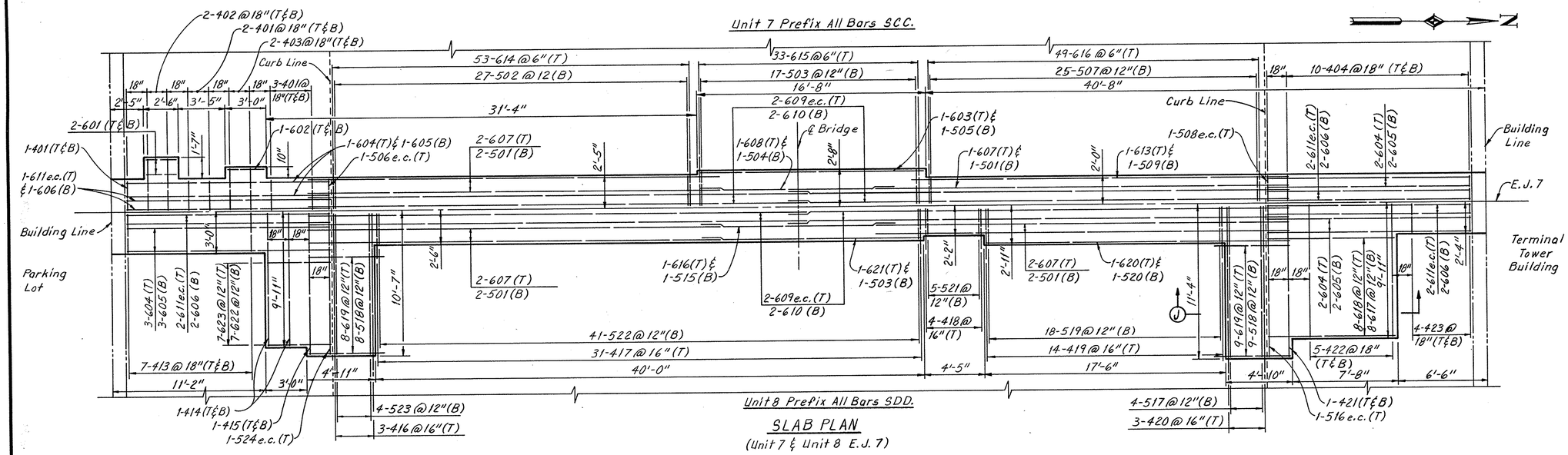

SLAB PLAN
(Unit 7 & Unit 8 E.J. 7)

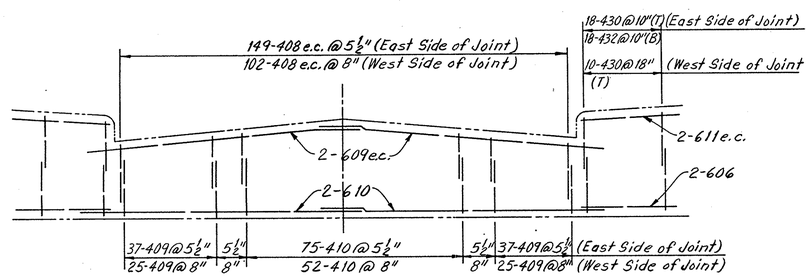

STIRRUP REINFORCEMENT PLACEMENT AT EXPANSION JOINT

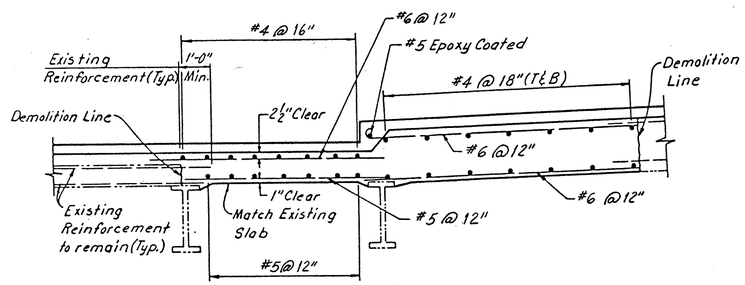

SECTION J-J

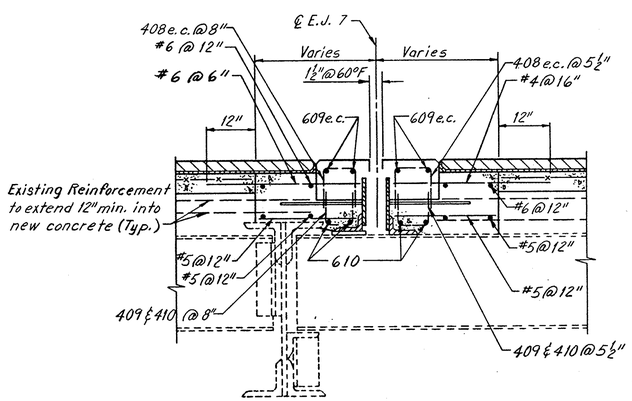

TYPICAL ROADWAY EXPANSION JOINT

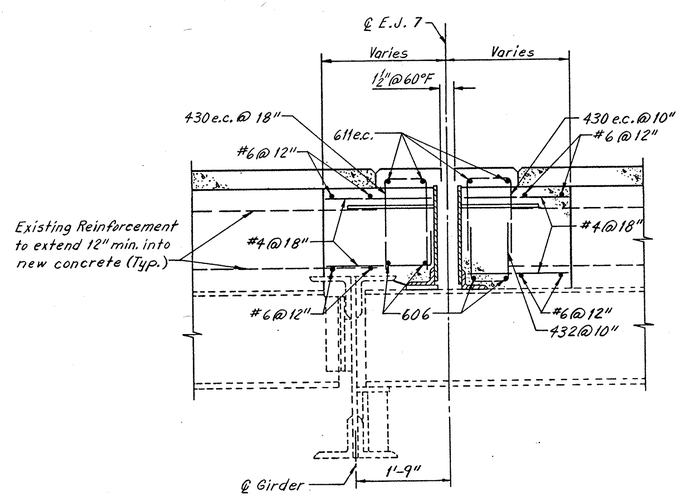

TYPICAL SIDEWALK EXPANSION JOINT

NOTES:
1.) For Plan see Sheet 19A.
2.) For Reinforcement Schedule see Sheet 19C.
3.) All #4 Bars shall be spliced 12".
4.) All #5 Bars shall be spliced 16".
5.) All #6 Bars shall be spliced 17".
6.) The following abbreviations are used:
(T) = Top (B) = Bottom
(T & B) = Top & Bottom
(Typ.) = Typical E.C. = Epoxy Coated

Sheet added 1-11-85

EUTHENICS INC.
CONSULTING ENGINEERS
CLEVELAND OHIO

REHABILITATION OF TOWER CITY BRIDGES
PROSPECT AVE., HURON ROAD,
WEST 2ND., 3RD. & 6TH. ST. VIADUCTS

SLAB PLAN
E.J.7 UNITS 7 & 8
PHASE II

CLEVELAND CUYAHOGA COUNTY OHIO

Made JSC	Trcd. JSC	Ckd. LJD	Rev. RAB	Scale:
Date 10-24-84	Date 10-25-84	Date 10-25-84	Date 10-29-84	Sheet 19B

ODOT 11-28-84 TES

FHWA REGION	STATE	PROJECT	
5	OHIO	IX-ID99(9)	

19C

CUYAHOGA COUNTY
HURON/PROSPECT BRIDGE

MARK	NO.	LENGTH	TYPE	SER. INCR.	WEIGHT (LBS.)
UNIT-7 WEST SIDE OF E.J.7 PROSPECT					
SCC 401	12	2'-0"	Str.		16
SCC 402	4	3'-7"	Str.		10
SCC 403	4	2'-10"	Str.		8
SCC 404	20	1'-7"	Str.		21
*SCC 408	102	2'-6"	6		*170
SCC 409	50	2'-6"	6		84
SCC 410	52	3'-2"	6		110
*SCC 430	20	2'-4"	6		*31
SCC 501	3	30'-0"	Str.		94
SCC 502	27	2'-0"	Str.		56
SCC 503	17	2'-3"	Str.		40
SCC 504	1	14'-0"	Str.		15
SCC 505	1	16'-4"	Str.		17
*SCC 506	1	2'-0"	Str.		*2
SCC 507	25	1'-7"	Str.		41
*SCC 508	1	1'-7"	Str.		*2
SCC 509	1	27'-4"	Str.		29
SCC 601	4	2'-2"	Str.		13
SCC 602	2	2'-8"	Str.		8
SCC 603	1	16'-4"	Str.		25
SCC 604	4	16'-0"	1		96
SCC 605	4	15'-4"	2		92
SCC 606	4	14'-8"	Str.		88
SCC 607	3	30'-0"	Str.		135
SCC 608	1	14'-2"	Str.		21
*SCC 609	4	36'-4"	Str.		*218
SCC 610	4	36'-4"	Str.		218
*SCC 611	4	14'-8"	Str.		*88
SCC 613	1	27'-4"	Str.		41
SCC 614	53	3'-2"	Str.		252
SCC 615	33	3'-5"	Str.		169
SCC 616	49	2'-9"	Str.		202
*TOTAL WEIGHT EPOXY COATED =					*511
TOTAL WEIGHT NON-EPOXY COATED =					1,901
C.E.I. M.H. ROOF UNIT 7 NORTH SIDE OF PROSPECT					
SCC 451	10	12'-10"	Str.		86
SCC 452	10	11'-10"	Str.		79
SCC 453	13	2'-7"	9		22
*SCC 551	1	13'-0"	Str.		*14
SCC 651	13	15'-0"	2		293
SCC 652	13	13'-3"	Str.		259
*TOTAL WEIGHT EPOXY COATED =					*14
TOTAL WEIGHT NON-EPOXY COATED =					739

MARK	NO.	LENGTH	TYPE	SER. INCR.	WEIGHT (LBS.)
UNIT 8 EAST SIDE OF E.J.7 PROSPECT					
*SDD 408	149	2'-6"	6		*249
SDD 409	74	2'-6"	6		124
SDD 410	75	3'-2"	6		159
SDD 413	14	2'-7"	Str.		24
SDD 414	4	9'-6"	Str.		25
SDD 415	2	10'-2"	Str.		14
SDD 416	3	11'-4"	Str.		23
SDD 417	31	3'-3"	Str.		67
SDD 418	4	2'-11"	Str.		8
SDD 419	14	3'-8"	Str.		34
SDD 420	3	12'-1"	Str.		24
SDD 421	2	10'-11"	Str.		15
SDD 422	10	9'-5"	Str.		63
SDD 423	8	1'-11"	Str.		10
*SDD 430	36	2'-4"	6		*56
SDD 432	36	3'-0"	6		72
SDD 501	4	30'-0"	Str.		125
SDD 503	1	15'-11"	Str.		17
SDD 515	1	14'-0"	Str.		15
*SDD 516	1	10'-11"	Str.		*11
SDD 517	4	10'-11"	Str.		46
SDD 518	17	4'-7"	Str.		81
SDD 519	18	2'-6"	Str.		47
SDD 520	1	22'-0"	Str.		23
SDD 521	5	1'-9"	Str.		9
SDD 522	41	2'-1"	Str.		89
SDD 523	4	10'-2"	Str.		42
*SDD 524	1	10'-2"	Str.		*11
SDD 604	5	16'-0"	1		120
SDD 605	5	15'-4"	2		115
SDD 606	4	14'-8"	Str.		88
SDD 607	4	30'-0"	Str.		180
*SDD 609	4	36'-4"	Str.		*218
SDD 610	4	36'-4"	Str.		218
*SDD 611	4	14'-8"	Str.		*88
SDD 616	1	14'-2"	Str.		21
SDD 617	8	9'-2"	Str.		110
SDD 618	8	9'-10"	2		118
SDD 619	17	5'-7"	Str.		143
SDD 620	1	22'-0"	Str.		33
SDD 621	1	16'-0"	Str.		24
SDD 622	7	4'-6"	Str.		47
SDD 623	7	5'-2"	2		54
*TOTAL WEIGHT EPOXY COATED =					*633
TOTAL WEIGHT NON-EPOXY COATED =					2,427

MARK	NO.	LENGTH	TYPE	SER. INCR.	WEIGHT (LBS.)
LIGHT PULL BOX - 2 EACH UNIT 8					
LDD 420	6	7'-7"	6		30
LDD 421	20	3'-5"	5		46
LDD 422	20	2'-0"	Str.		27
LDD 423	20	3'-3	Str.		43
LDD 620	8	6'-2"	6		74
TOTAL WEIGHT =					220
LIGHT PULL BOX - 2 EACH UNIT 7					
LCC 420	6	7'-7"	6		30
LCC 421	20	3'-5"	5		46
LCC 422	20	2'-0"	Str.		27
LCC 423	20	3'-3"	Str.		43
LCC 620	8	6'-2"	6		74
TOTAL WEIGHT =					220

*INDICATES EPOXY COATED BARS.

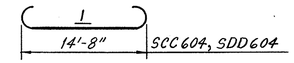

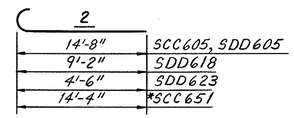

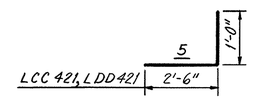

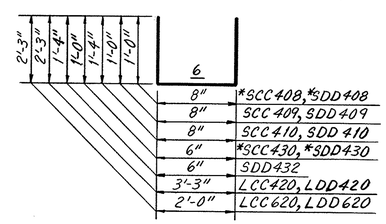

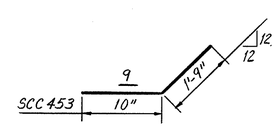

REINFORCING STEEL SAMPLES

REFER TO CMS SECTIONS 106.03, 700, 709.01 THROUGH 709.05 AND 709.08. SUFFICIENT ADDITIONAL REINFORCING STEEL SHALL BE PROVIDED FOR SAMPLING. RANDOM SAMPLES SHALL BE REPLACED IN THE STRUCTURES BY THE ADDITIONAL STEEL, SPLICED IN ACCORDANCE WITH 509.08.

sheet added 1-11-85

EUTHENICS INC.
CONSULTING ENGINEERS
CLEVELAND OHIO

REHABILITATION OF TOWER CITY BRIDGES
PROSPECT AVE., HURON ROAD,
WEST 2ND., 3RD. & 6TH. ST. VIADUCTS

REINFORCEMENT SCHEDULE
E.J.7 UNITS 7 & 8
PHASE II

CLEVELAND CUYAHOGA COUNTY OHIO

Made JSC	Trcd. JSC	Ckd. LJD	Rev. RAB	Scale:
Date 10-24-84	Date 10-25-84	Date 10-25-84	Date 10-29-84	Sheet 19C

ODOT 11-28-84 TES

FHWA REGION	STATE	PROJECT	
5	OHIO	IX-ID99(9)	

19E

CUYAHOGA COUNTY
HURON/PROSPECT BRIDGE

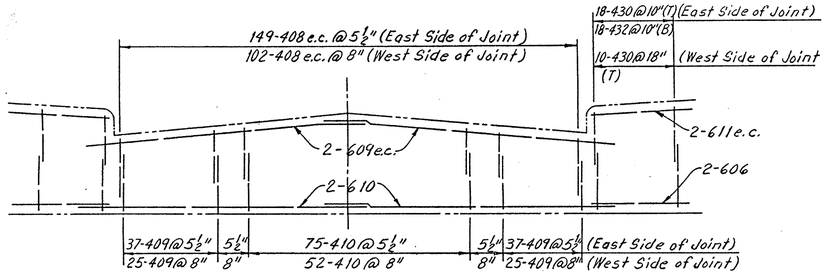

STIRRUP REINFORCEMENT PLACEMENT AT EXPANSION JOINT

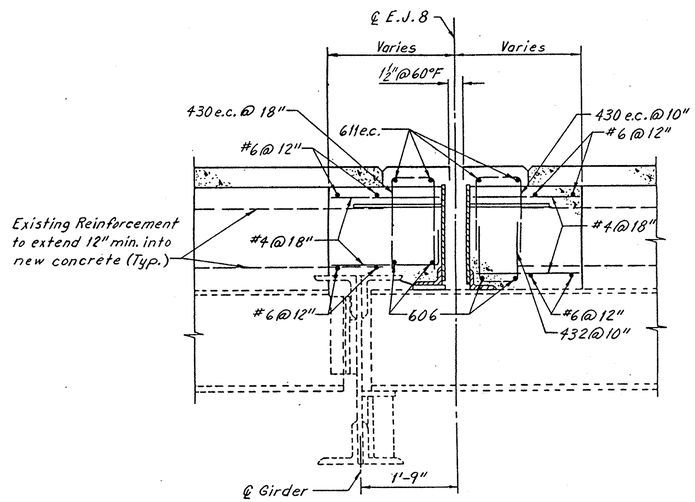

TYPICAL SIDEWALK EXPANSION JOINT

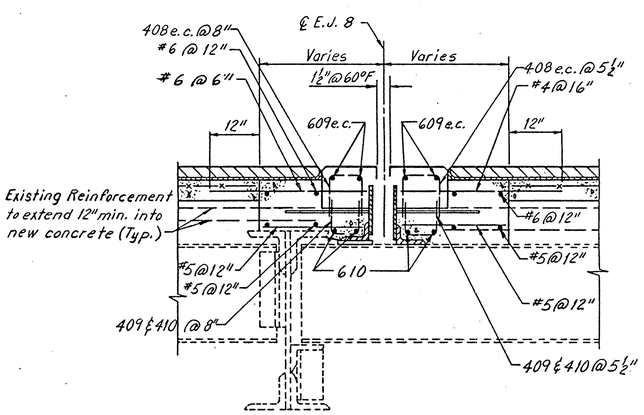

TYPICAL ROADWAY EXPANSION JOINT

MARK	NO.	LENGTH	TYPE	SER. INCR.	WEIGHT (LBS.)
UNIT-6 WEST SIDE OF E.J. 8 PROSPECT					
*SBB408	102	2'-6"	6		*170
SBB409	50	2'-6"	6		84
SBB410	52	3'-2"	6		110
SBB422	20	1'-10"	Str.		24
SBB423	7	28'-9"	Str.		134
SBB424	2	5'-8"	Str.		8
SBB425	30	21'-7"	Str.		433
SBB426	5	1'-7"	Str.		5
*SBB430	20	2'-4"	6		*31
SBB501	4	30'-0"	Str.		125
SBB504	2	14'-0"	Str.		29
*SBB519	1	1'-10"	Str.		*2
SBB520	79	1'-10"	Str.		151
SBB521	31	6'-7"	Str.		213
SBB522	7	27'-7"	Str.		201
SBB523	7	6'-4"	Str.		46
*SBB524	1	4'-4"	Str.		*5
SBB526	21	2'-3"	5		49
SBB604	2	16'-0"	1		48
SBB605	4	15'-4"	2		92
SBB606	4	14'-8"	Str.		88
SBB607	4	30'-0"	Str.		180
SBB608	2	14'-2"	Str.		43
*SBB609	4	36'-4"	Str.		*218
SBB610	4	36'-4"	Str.		218
*SBB611	4	14'-8"	Str.		*88
SBB624	158	3'-0"	Str.		712
SBB625	31	7'-9"	Str.		361
SBB626	7	7'-6"	Str.		79
SBB627	1	15'-1"	2		23
SBB628	1	14'-5"	2		22
SBB629	21	15'-10"	8		499
SBB630	21	15'-10"	2		499
*TOTAL WEIGHT EPOXY COATED =					*514
TOTAL WEIGHT NON-EPOXY COATED =					4,476
LIGHT PULL BOX-3 EACH UNIT 6					
LBB420	9	7'-7"	6		46
LBB421	30	3'-5"	5		68
LBB422	30	2'-0"	Str.		40
LBB423	30	3'-3"	Str.		65
LBB620	12	6'-2"	6		111
TOTAL WEIGHT =					330

MARK	NO.	LENGTH	TYPE	SER. INCR.	WEIGHT (LBS.)
UNIT-7 EAST SIDE OF E.J. 8 PROSPECT					
*SCC408	149	2'-6"	6		*249
SCC409	74	2'-6"	6		124
SCC410	75	3'-2"	6		159
SCC411	14	3'-5"	Str.		32
SCC412	4	3'-10"	Str.		10
SCC413	2	5'-9"	Str.		8
SCC415	5	6'-11"	Str.		23
SCC416	39	4'-1"	Str.		106
SCC417	7	5'-5"	Str.		25
SCC418	3	12'-9"	Str.		26
SCC419	2	11'-7"	Str.		15
SCC420	10	9'-8"	Str.		65
SCC421	8	1'-9"	Str.		9
*SCC430	36	2'-4"	6		*56
SCC432	36	3'-0"	6		72
SCC501	6	30'-0"	Str.		188
SCC504	3	14'-0"	Str.		44
SCC510	1	13'-5"	Str.		14
SCC511	3	6'-2"	Str.		19
SCC512	8	4'-5"	Str.		37
*SCC513	1	5'-9"	Str.		*6
SCC514	6	5'-9"	Str.		36
SCC515	52	2'-11"	Str.		158
SCC516	9	4'-3"	Str.		40
SCC517	4	11'-7"	Str.		48
*SCC518	1	11'-7"	Str.		*12
SCC604	6	16'-0"	1		144
SCC605	6	15'-4"	2		138
SCC606	4	14'-8"	Str.		88
SCC607	6	30'-0"	Str.		270
SCC608	3	14'-2"	Str.		64
*SCC609	4	36'-4"	Str.		*218
SCC610	4	36'-4"	Str.		218
*SCC611	4	14'-8"	Str.		*88
SCC617	1	14'-5"	Str.		22
SCC618	3	7'-4"	Str.		33
SCC619	8	5'-7"	Str.		67
SCC620	1	4'-2"	Str.		6
SCC621	8	9'-10"	2		118
SCC622	8	9'-2"	Str.		110
SCC623	1	4'-10"	2		7
*TOTAL WEIGHT EPOXY COATED =					*629
TOTAL WEIGHT NON-EPOXY COATED =					2,543

*INDICATES EPOXY COATED BARS.

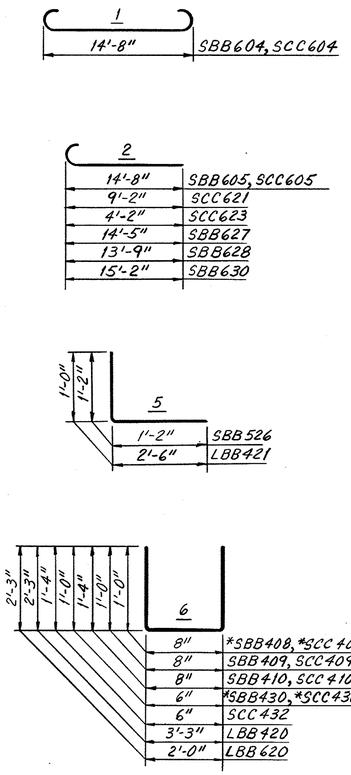

REINFORCING STEEL SAMPLES

REFER TO CMS SECTIONS 106.03, 700, 709.01 THROUGH 709.05 AND 709.08. SUFFICIENT ADDITIONAL REINFORCING STEEL SHALL BE PROVIDED FOR SAMPLING. RANDOM SAMPLES SHALL BE REPLACED IN THE STRUCTURES BY THE ADDITIONAL STEEL, SPLICED IN ACCORDANCE WITH 509.08.

Sheet added 1-11-85

EUTHENICS INC.
CONSULTING ENGINEERS
CLEVELAND OHIO

REHABILITATION OF TOWER CITY BRIDGES
PROSPECT AVE., HURON ROAD,
WEST 2ND., 3RD. & 6TH. ST. VIADUCTS
DETAILS AND
REINFORCEMENT SCHEDULE
E.J. 8 UNITS 6 & 7
PHASE II
CLEVELAND CUYAHOGA COUNTY OHIO

Made JSC	Trcd. JSC	Ckd. LJD	Rev. RAB	Scale:
Date 10-31-84	Date 11-1-84	Date 11-1-84	Date 11-1-84	Sheet 19E

ODOT 11-28-84 TES

FHWA REGION	STATE	PROJECT	
5	OHIO	IX-ID99(9)	

19F

CUYAHOGA COUNTY
HURON/PROSPECT BRIDGE

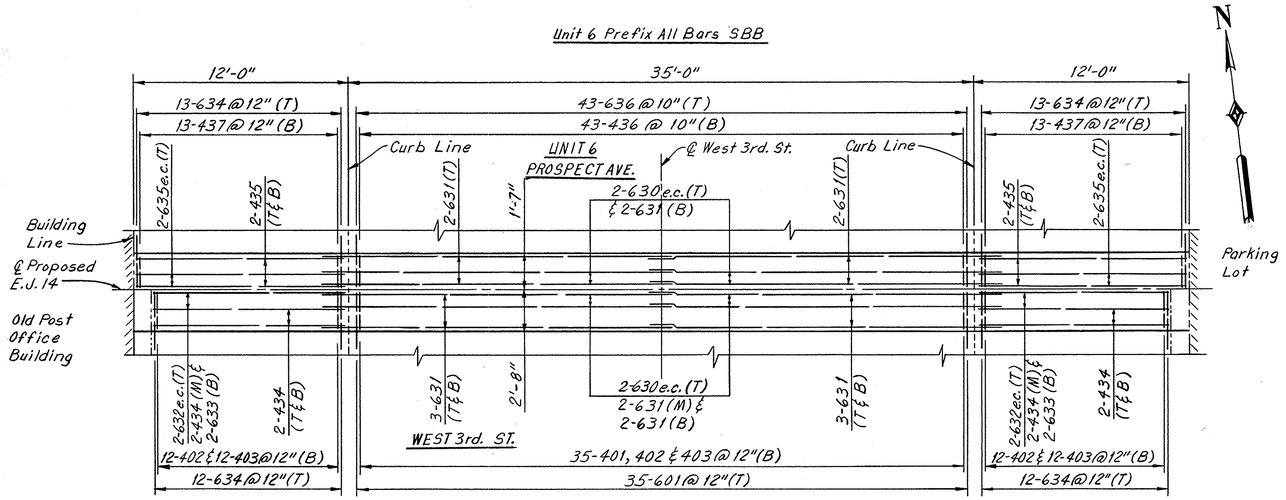

SLAB PLAN
West 3rd. St. at Prospect
Unit 6

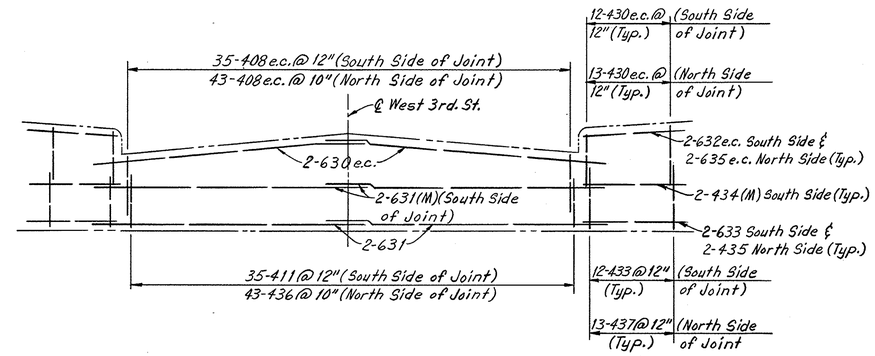

STIRRUP REINFORCEMENT PLACEMENT AT EXPANSION JOINT 14
West 3rd. St. at Prospect Ave.

MARK	NO.	LENGTH	TYPE	SER. INCR.	WEIGHT (LBS.)
E.J. 14 (WEST 3rd. STREET SIDE)					
SX 401	35	1'-9"	Str.		41
SX 402	59	1'-8"	Str.		66
SX 403	59	2'-7"	5		102
*SX 408	35	2'-6"	6		*58
SX 411	35	4'-6"	6		105
*SX 430	24	2'-4"	6		*37
SX 433	24	6'-0"	6		96
SX 434	12	10'-8"	Str.		86
SX 601	35	3'-5"	5		180
*SX 630	4	19'-9"	Str.		*119
SX 631	20	19'-9"	Str.		593
*SX 632	4	10'-8"	Str.		*64
SX 633	4	10'-8"	Str.		64
SX 634	24	2'-8"	6		96
E.J. 14-UNIT 6 PROSPECT AVE. SIDE					
*SBB 408	43	2'-6"	6		*72
*SBB 430	26	2'-4"	6		*41
SBB 435	8	11'-8"	Str.		62
SBB 436	43	2'-9"	5		79
SBB 437	26	3'-7"	5		62
*SBB 630	4	19'-9"	Str.		*119
SBB 631	8	19'-9"	Str.		237
SBB 634	26	2'-8"	6		104
*SBB 635	4	11'-8"	Str.		*70
SBB 636	43	3'-4"	5		215
*Total Weight Epoxy Coated Bars =					*580
Total Weight Non-Epoxy Coated Bars =					2,188

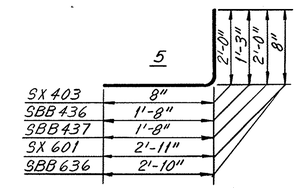

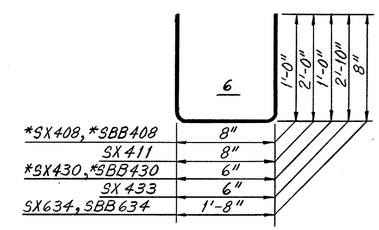

REINFORCING STEEL SAMPLES

REFER TO CMS SECTIONS 106.03, 700, 709.01 THROUGH 709.05 AND 709.08. SUFFICIENT ADDITIONAL REINFORCING STEEL SHALL BE PROVIDED FOR SAMPLING. RANDOM SAMPLES SHALL BE REPLACED IN THE STRUCTURES BY THE ADDITIONAL STEEL, SPLICED IN ACCORDANCE WITH 509.08.

NOTES:
1. ALL #6 BARS SHALL BE SPLICED 17"
2. FOR PLAN OF WEST 3RD. ST. SEE SHEET
3. THE FOLLOWING ABBREVIATIONS ARE USED:
   (T) = TOP (T & B) = TOP & BOTTOM
   (B) = BOTTOM E.C. = EPOXY COATED
   (M) = MIDDLE (TYP.) = TYPICAL

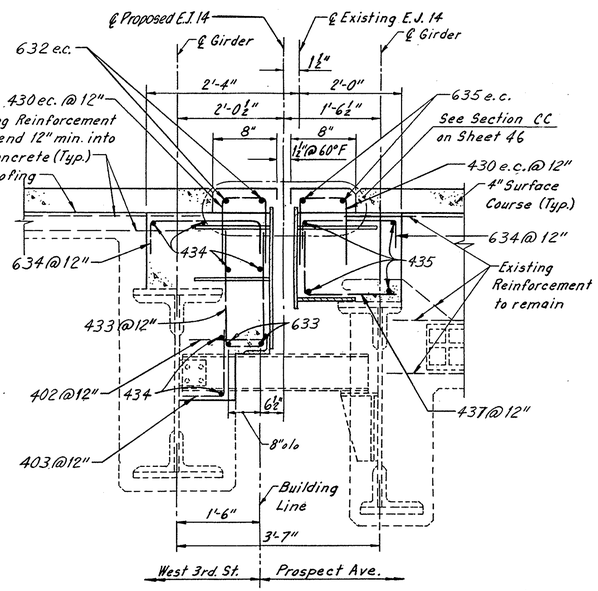

TYPICAL EXPANSION JOINT NO. 14
(West 3rd. St. @ Prospect Ave. Sidewalk)

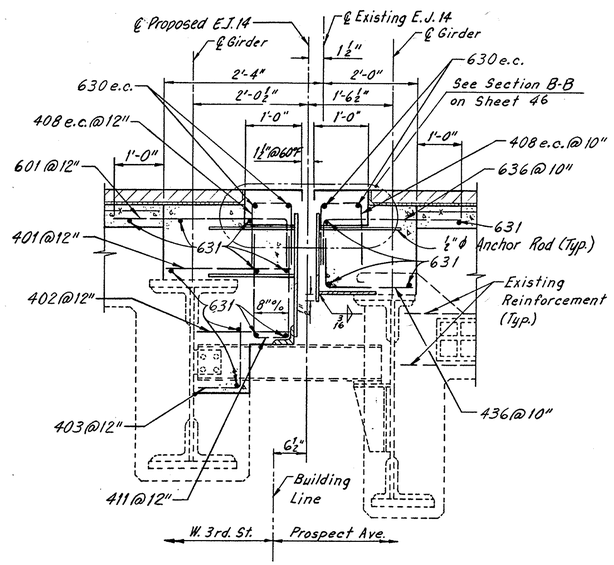

EXPANSION JOINT NO. 14
(W. 3rd. St. at Prospect Ave. Street)

*INDICATES EPOXY COATED BARS.

Sheet added 1-11-85

EUTHENICS INC.
CONSULTING ENGINEERS
CLEVELAND OHIO

REHABILITATION OF TOWER CITY BRIDGES
PROSPECT AVE., HURON ROAD,
WEST 2ND., 3RD. & 6TH. ST. VIADUCTS

SLAB PLAN
E.J.14 AT WEST 3rd. ST.
AND PROSPECT AVE.
PHASE II

CLEVELAND CUYAHOGA COUNTY OHIO

Made LJD	Trcd. JSC	Ckd. JSC	Rev. RAB	Scale:
Date 8-24-84	Date 8-27-84	Date 8-27-84	Date 8-28-84	Sheet 19F

ODOT 11-28-84 TES

FHWA REGION	STATE	PROJECT	
5	OHIO	IX-ID99(9)	

19D

CUYAHOGA COUNTY
HURON/PROSPECT BRIDGE

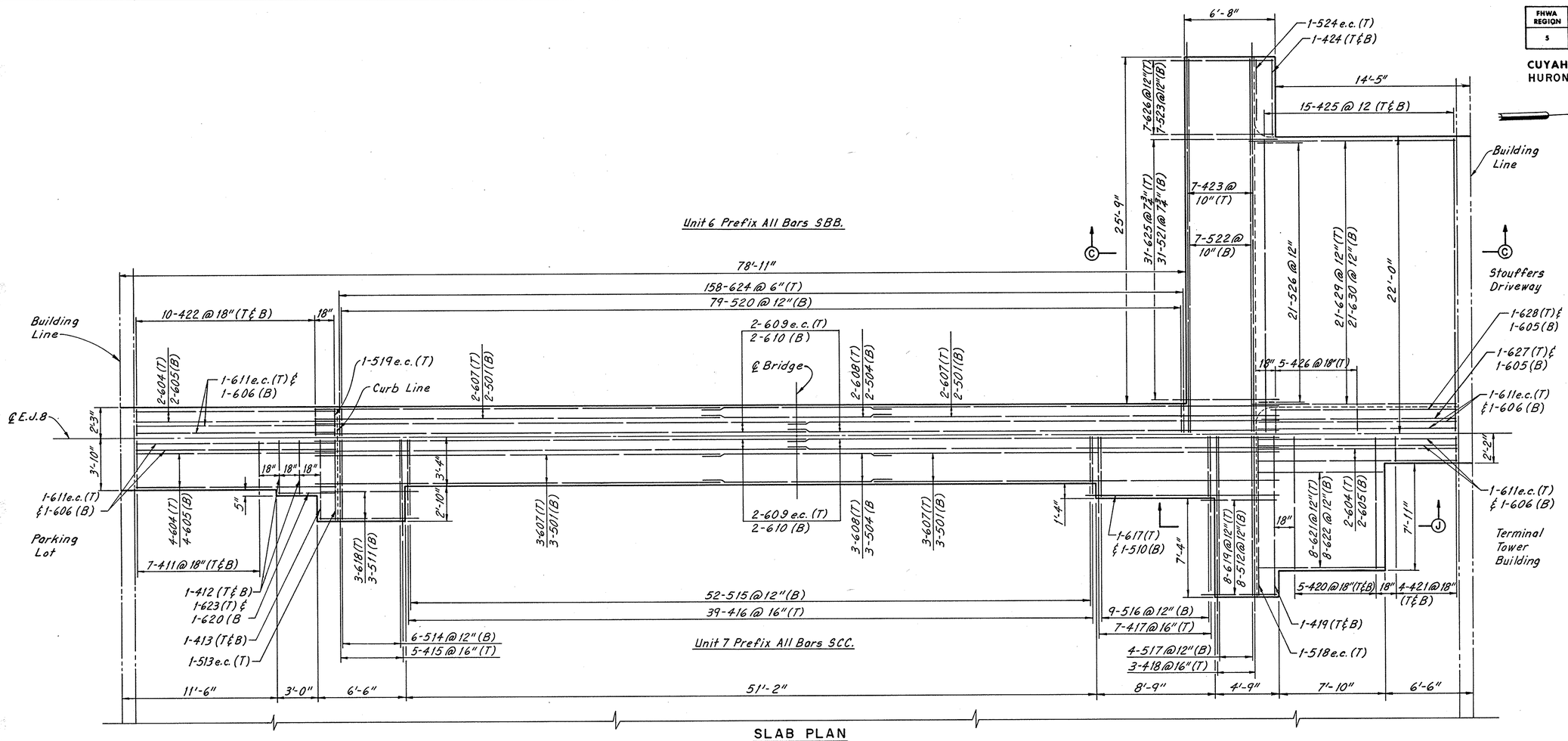

SLAB PLAN

(Unit 6 & Unit 7 E.J.8)

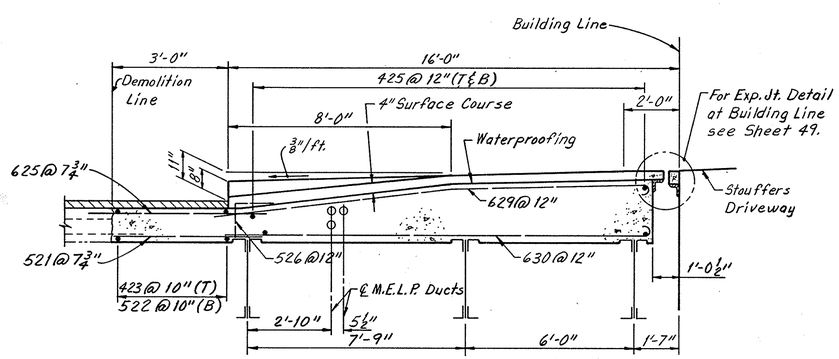

SECTION C-C

NOTE: 36 C.E.I. Ducts to be abandoned and plugged at Demolition Line.

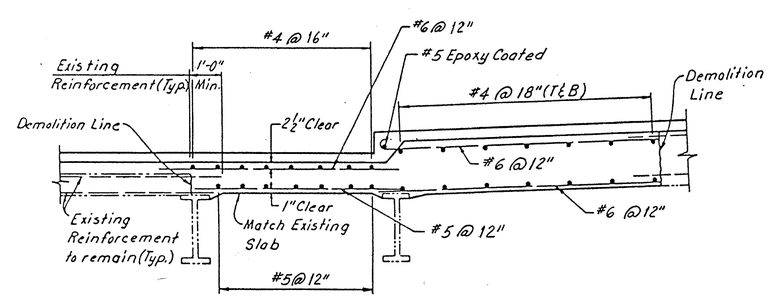

SECTION J-J

NOTES:

1.) For Plan see Sheet 19A.
2.) For Reinforcement Schedule see Sheet 19E.
3.) For Additional Details see Sheet 19E.
4.) All #5 Bars shall be spliced 16".
5.) All #6 Bars shall be spliced 17".
6.) The following abbreviations are used:
(T) = Top (B) = Bottom
(T & B) = Top & Bottom
(Typ.) = Typical E.C. = Epoxy Coated

EUTHENICS INC.
CONSULTING ENGINEERS
CLEVELAND OHIO

REHABILITATION OF TOWER CITY BRIDGES
PROSPECT AVE., HURON ROAD,
WEST 2ND., 3RD. & 6TH. ST. VIADUCTS

SLAB PLAN
E.J.8 UNITS 6 & 7
PHASE II

CLEVELAND CUYAHOGA COUNTY OHIO

Made JSC	Trcd. JSC	Ckd. LJD	Rev. RAB	Scale:
Date 10-31-84	Date 11-1-84	Date 11-1-84	Date 11-1-84	Sheet 19D

sheet added 1-11-85

ODOT 11-28-84 TES

FHWA REGION	STATE	PROJECT	
5	OHIO	IX-ID99 (9)	

196

CUYAHOGA COUNTY
HURON / PROSPECT BRIDGE

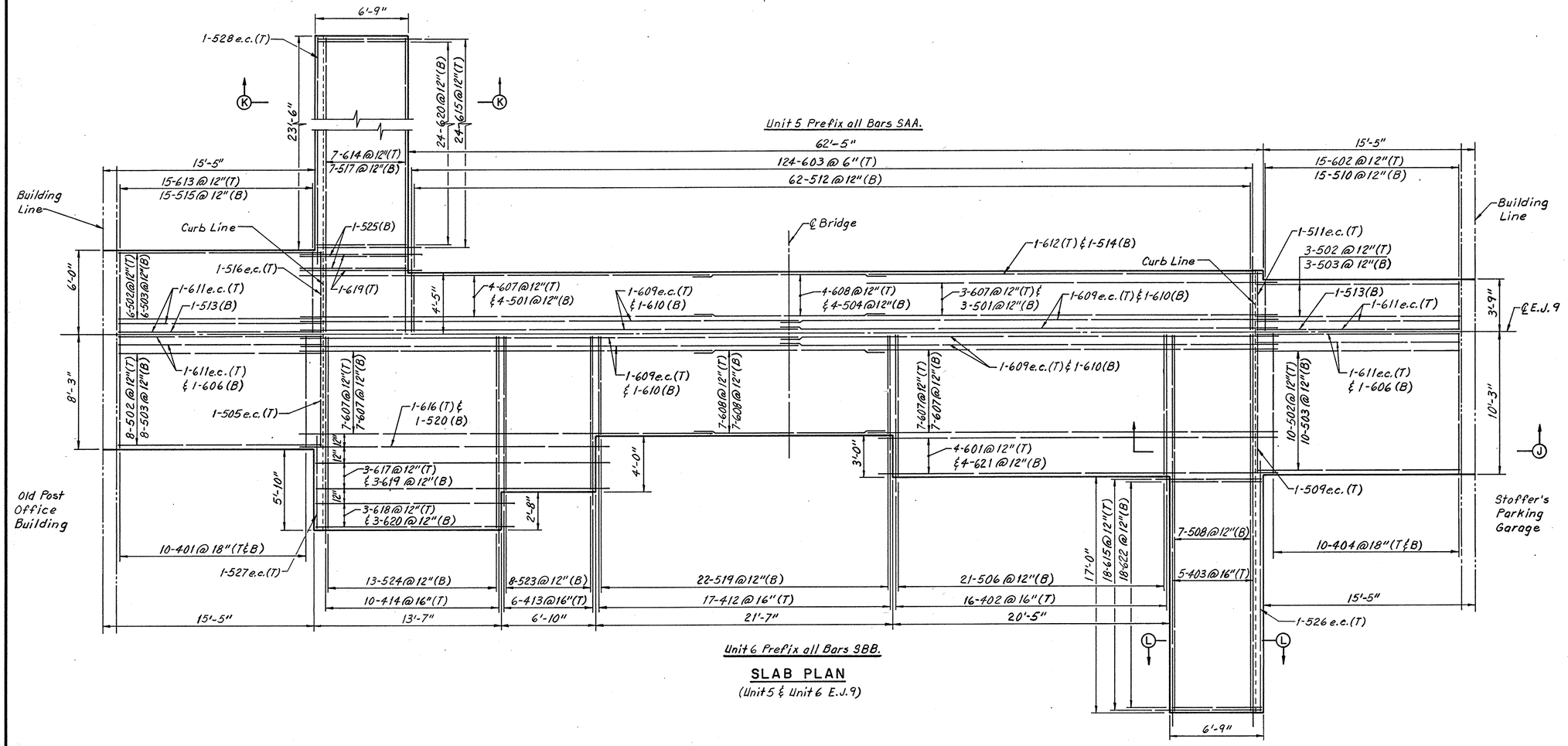

SLAB PLAN
(Unit 5 & Unit 6 E.J. 9)

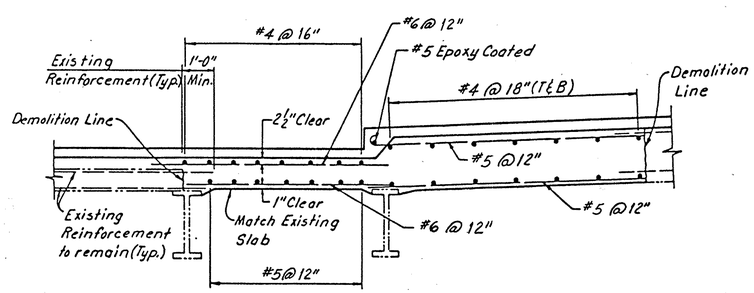

SECTION J-J

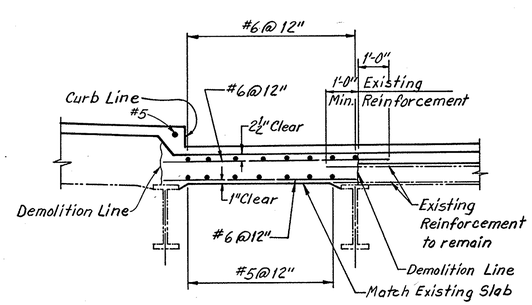

SECTION K-K

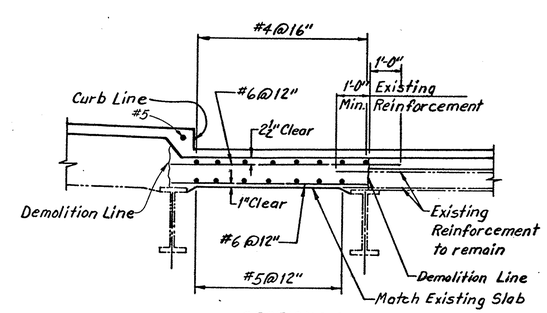

SECTION L-L

NOTES:
1.) For Plan see Sheet 19A.
2.) For Reinforcement see Sheet 19H.
3.) All #4 Bars shall be spliced 12".
4.) All #5 Bars shall be spliced 16".
5.) All #6 Bars shall be spliced 17".
6.) The following abbreviations are used:
(T) = Top (B) = Bottom
(T & B) = Top & Bottom
(Typ.) = Typical E.C. = Epoxy Coated

Sheet added 3-20-85

EUTHENICS INC.
CONSULTING ENGINEERS
CLEVELAND OHIO

REHABILITATION OF TOWER CITY BRIDGES
PROSPECT AVE., HURON ROAD,
WEST 2ND., 3RD. & 6TH. ST. VIADUCTS

SLAB PLAN
E.J. 9 UNITS 5 & 6
PROSPECT AVE. PHASE II

CLEVELAND CUYAHOGA COUNTY OHIO

Made JSC	Trcd. JSC	Ckd. LJD	Rev. RAB	Scale:
Date 2-27-85	Date 2-27-85	Date 2-28-85	Date 2-28-85	Sheet 19G

ODOT 3-8-85 TES

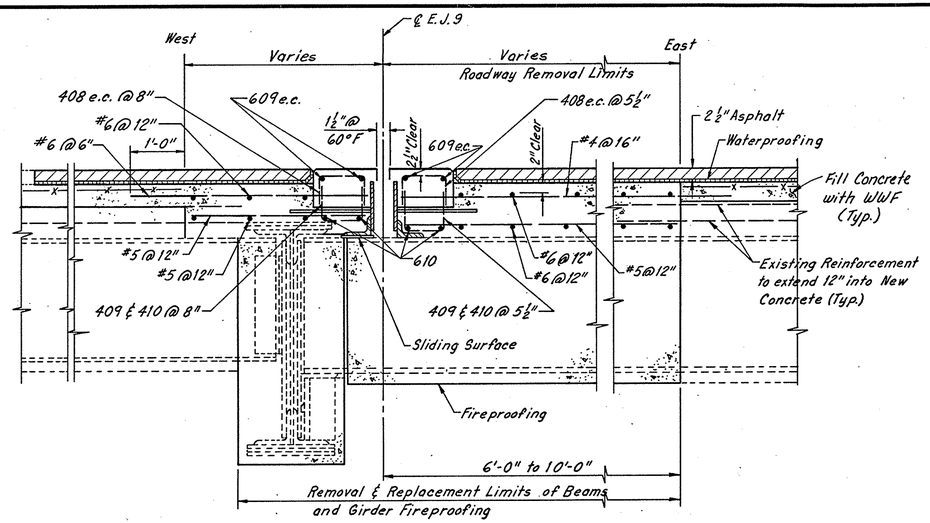

ROADWAY EXPANSION JOINT

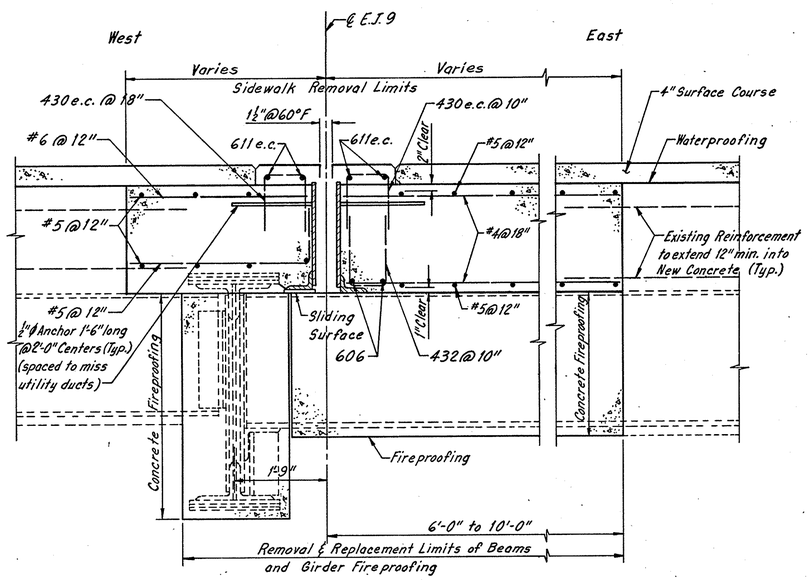

SIDEWALK EXPANSION JOINT

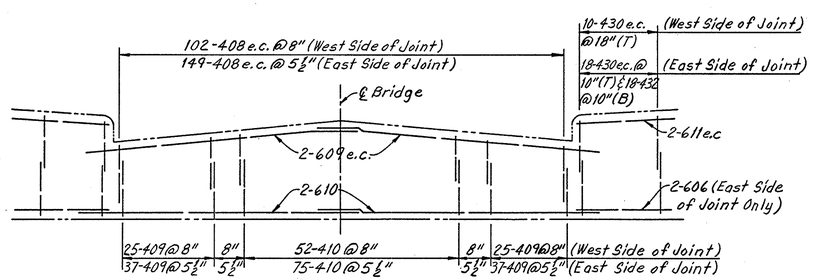

STIRRUP REINFORCEMENT PLACEMENT AT EXPANSION JOINT

MARK	NO.	LENGTH	TYPE	SER. INCR.	WEIGHT (LBS.)
UNIT-5 WEST SIDE OF E.J. 9 PROSPECT					
*SAA 408	102	2'-6"	6		*170
SAA 409	50	2'-6"	6		84
SAA 410	52	3'-2"	6		110
*SAA 430	20	2'-4"	6		*31
SAA 501	7	30'-0"	Str.		219
SAA 502	9	15'-10"	1		149
SAA 503	9	15'-3"	2		143
SAA 504	4	14'-0"	Str.		58
SAA 510	15	4'-6"	5		70
*SAA 511	1	4'-0"	Str.		*4
SAA 512	62	4'-0"	Str.		259
SAA 513	2	14'-8"	Str.		31
SAA 514	1	28'-11"	Str.		30
SAA 515	15	6'-9"	5		106
*SAA 516	1	5'-7"	Str.		*6
SAA 517	7	29'-3"	Str.		214
SAA 525	2	7'-8"	Str.		16
*SAA 528	1	24'-4"	Str.		*25
SAA 602	15	3'-4"	Str.		75
SAA 603	124	5'-2"	Str.		962
SAA 607	7	30'-0"	Str.		315
SAA 608	4	14'-2"	Str.		85
*SAA 609	4	36'-4"	Str.		*218
SAA 610	4	36'-4"	Str.		218
*SAA 611	4	14'-8"	Str.		*88
SAA 612	1	28'-11"	Str.		44
SAA 613	15	5'-7"	Str.		126
SAA 614	7	29'-3"	Str.		308
SAA 615	24	7'-7"	Str.		273
SAA 619	2	8'-10"	Str.		27
SAA 620	24	6'-5"	Str.		231
*TOTAL WEIGHT EPOXY COATED				=	*542
TOTAL WEIGHT NON-EPOXY COATED				=	4,153

MARK	NO.	LENGTH	TYPE	SER. INCR.	WEIGHT (LBS.)
UNIT-6 EAST SIDE OF E.J. 9 PROSPECT					
SBB 401	20	7'-10"	Str.		105
SBB 402	16	11'-2"	Str.		119
SBB 403	5	28'-2"	Str.		94
SBB 404	20	9'-10"	Str.		131
*SBB 408	149	2'-6"	6		*249
SBB 409	74	2'-6"	6		124
SBB 410	75	3'-2"	6		159
SBB 412	17	8'-2"	Str.		93
SBB 413	6	12'-2"	Str.		49
SBB 414	10	14'-10"	Str.		99
*SBB 430	36	2'-4"	6		*56
SBB 432	36	3'-0"	6		72
SBB 502	18	15'-10"	1		297
SBB 503	18	15'-3"	2		286
*SBB 505	1	7'-10"	Str.		*8
SBB 506	21	10'-0"	Str.		219
SBB 508	7	27'-0"	Str.		197
*SBB 509	1	9'-10"	Str.		*10
SBB 519	22	7'-0"	Str.		161
SBB 520	1	21'-4"	Str.		22
SBB 523	8	11'-0"	Str.		92
SBB 524	13	13'-8"	Str.		185
*SBB 526	1	17'-10"	Str.		*19
*SBB 527	1	6'-8"	Str.		*7
SBB 601	4	28'-7"	Str.		172
SBB 606	4	14'-8"	Str.		88
SBB 607	28	30'-0"	Str.		1,262
SBB 608	14	14'-2"	Str.		298
*SBB 609	4	36'-4"	Str.		*218
SBB 610	4	36'-4"	Str.		218
*SBB 611	4	14'-8"	Str.		*88
SBB 615	18	7'-7"	Str.		205
SBB 616	1	22'-6"	Str.		34
SBB 617	3	21'-3"	Str.		96
SBB 618	3	14'-5"	Str.		65
SBB 619	3	20'-1"	Str.		91
SBB 620	3	13'-3"	Str.		60
SBB 621	4	27'-5"	Str.		165
SBB 622	18	6'-5"	Str.		173
*TOTAL WEIGHT EPOXY COATED				=	*655
TOTAL WEIGHT NON-EPOXY COATED				=	5,431

FHWA REGION	STATE	PROJECT	
5	OHIO	IX-ID99 (9)	

19H

CUYAHOGA COUNTY
HURON/PROSPECT BRIDGE

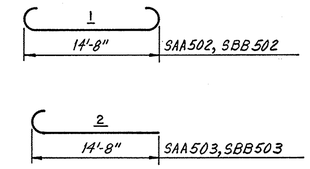

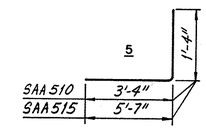

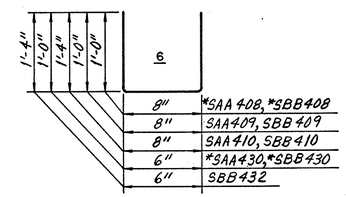

REINFORCING STEEL SAMPLES

REFER TO CMS SECTIONS 106.03, 700, 709.01 THROUGH 709.05 AND 709.08. SUFFICIENT ADDITIONAL REINFORCING STEEL SHALL BE PROVIDED FOR SAMPLING. RANDOM SAMPLES SHALL BE REPLACED IN THE STRUCTURES BY THE ADDITIONAL STEEL, SPLICED IN ACCORDANCE WITH 509.08.

*INDICATES EPOXY COATED BARS.

Sheet added 3-20-85

EUTHENICS INC.
CONSULTING ENGINEERS
CLEVELAND OHIO

REHABILITATION OF TOWER CITY BRIDGES
PROSPECT AVE., HURON ROAD,
WEST 2ND., 3RD. & 6TH. ST. VIADUCTS
DETAILS AND
REINFORCEMENT SCHEDULE
E.J. 9 UNITS 5 & 6
PROSPECT AVE. PHASE II
CLEVELAND CUYAHOGA COUNTY OHIO

Mode JSC	Trcd. JSC	Ckd. LJD	Rev. RAB	Scale:
Date 2-27-85	Date 2-27-85	Date 2-28-85	Date 2-28-85	Sheet 19H

ODOT 3-8-85 TES

FHWA REGION	STATE	PROJECT	
5	OHIO	M-1D 99 (9)	

20/170

CUYAHOGA COUNTY
HURON/PROSPECT BRIDGE

LEGEND

- Curb Drain
- New Style Light Pole
- Old Style Light Pole
- New Style Light Pole Base Only
- Old Style Light Pole Base Only
- Manhole
- Parking Meter
- Fire Hydrant
- Traffic Sign
- Traffic Signal Pole
- Electrical Ducts in Deck
- Telephone Ducts in Deck
- Vault in Deck
- Fence
- Water Line Under Deck
- Telegraph Ducts Under Deck
- Gas Line Under Deck
- Crack in Structural Deck
- Limits of Structural Deck Concrete to be Removed
- Area for Patching of Structural Deck Concrete (See Detailed Specifications)
- Existing Light Pull Box (To be removed and replaced)

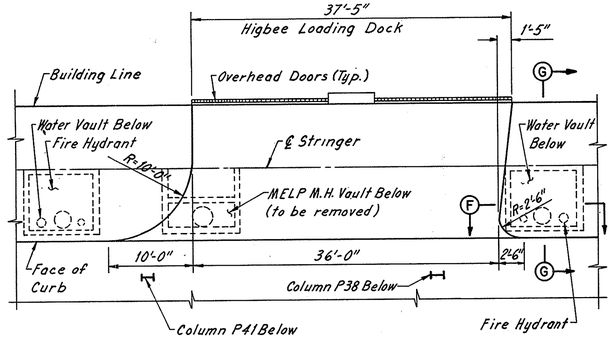

HIGBEE LOADING DOCK DRIVE PLAN

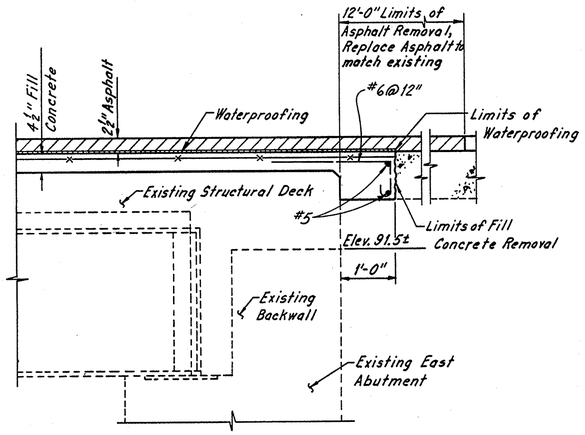

SECTION E-E

ROADWAY QUANTITIES								
REF. NO.	STATION		SIDE	202	604	608*	608	
				WALK REMOVED	MANHOLE ADJUSTED TO GRADE	4" CONCRETE WALK	CURB RAMPS	
	FROM	TO		SQ. FT.	EACH	SQ. FT.	EACH	
SW-1	22+51.03	22+66.78	Rt.	250		250	1	
MH-1		22+60.5	Rt.		1			

Note:
* 4" Concrete Walk Shall Conform to O.D.O.T. Item 608 except for Pattern Layout as Shown on Sheet 140. For Sidewalk General Notes See Sheet 14.

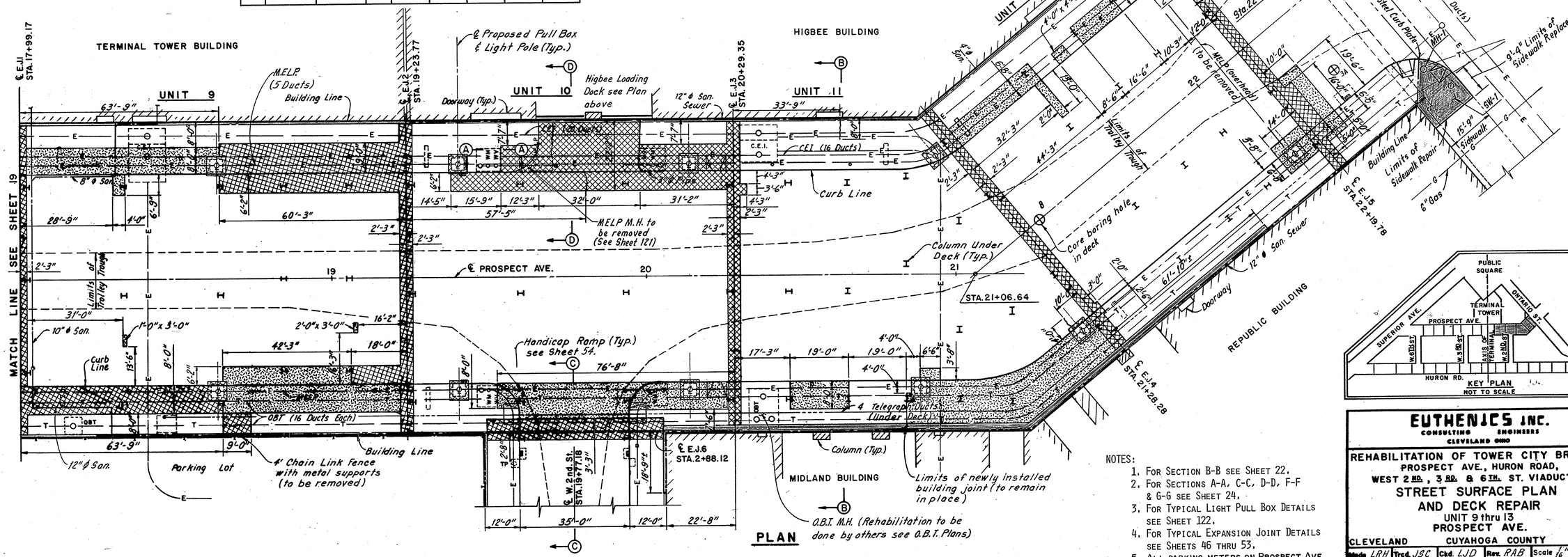

PLAN

NOTES:
1. For Section B-B see Sheet 22.
2. For Sections A-A, C-C, D-D, F-F & G-G see Sheet 24.
3. For Typical Light Pull Box Details see Sheet 122.
4. For Typical Expansion Joint Details see Sheets 46 thru 53.
5. All parking meters on Prospect Ave. to be removed and not replaced.

EUTHENICS INC.
CONSULTING ENGINEERS
CLEVELAND OHIO

REHABILITATION OF TOWER CITY BRIDGES
PROSPECT AVE., HURON ROAD, WEST 2ND., 3RD. & 6TH. ST. VIADUCTS
STREET SURFACE PLAN AND DECK REPAIR
UNIT 9 thru 13
PROSPECT AVE.

CLEVELAND CUYAHOGA COUNTY OHIO

Made LRH	Trcd. JSC	Ckd. LJD	Rev. RAB	Scale 1/16" = 1'-0"
Date 1-18-82	Date 2-10-82	Date 6-7-82	Date 10-5-82	Sheet 20/170

FHWA REGION	STATE	PROJECT	
5	OHIO	M-1D99(9)	

21 / 170

CUYAHOGA COUNTY
HURON / PROSPECT BRIDGE

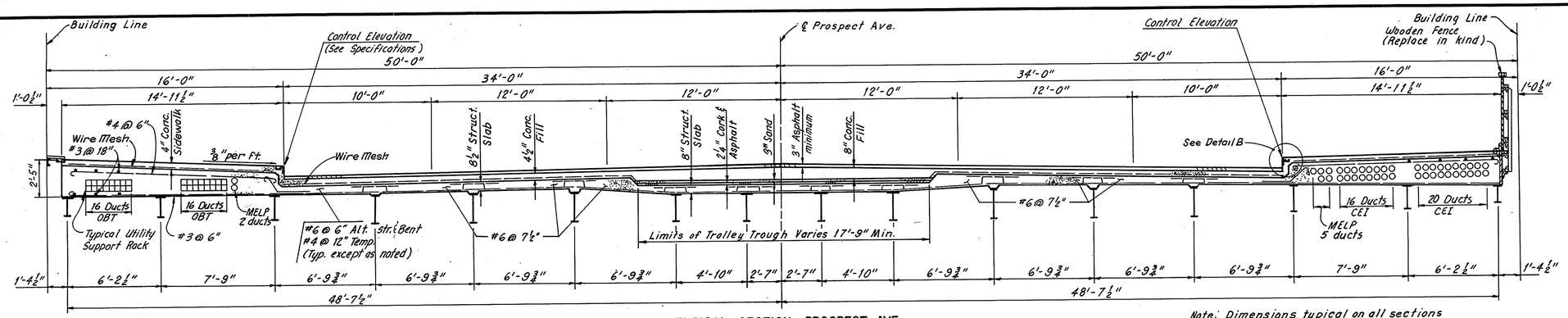

TYPICAL SECTION – PROSPECT AVE.
(West Abutment to E.J. 11)
(Looking West)
Scale: ¼" = 1'-0"

Note: Dimensions typical on all sections except as noted.

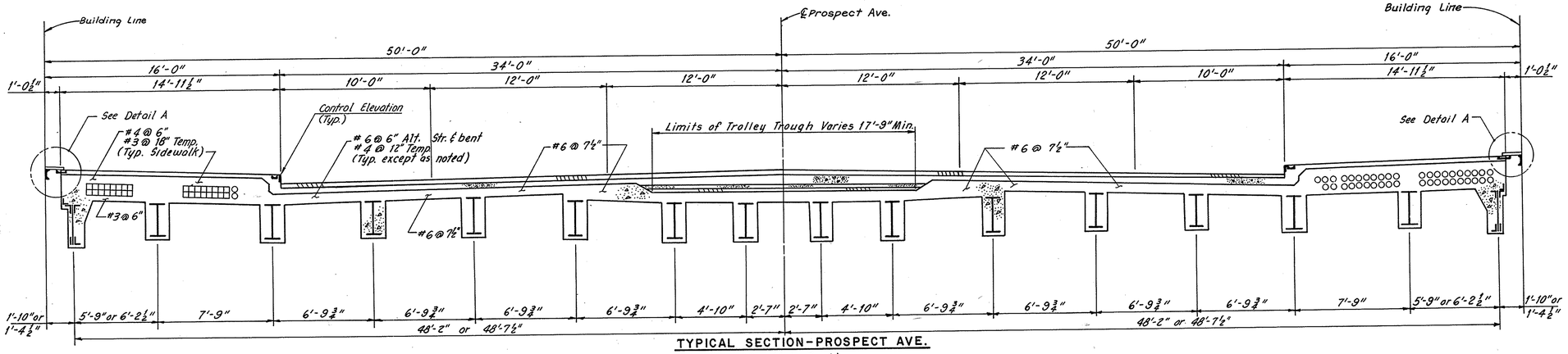

TYPICAL SECTION – PROSPECT AVE.
(E.J. 11 to E.J. 9)
(Looking West)
Scale: ¼" = 1'-0"

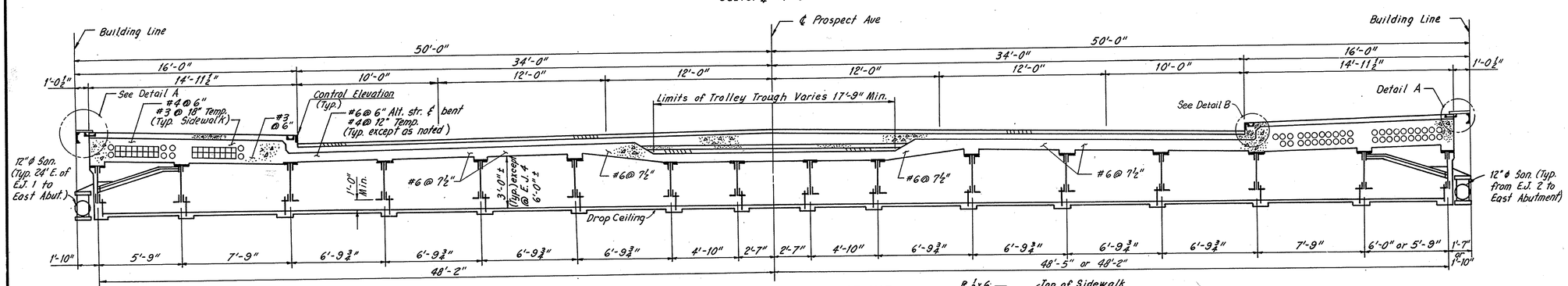

TYPICAL SECTION – PROSPECT AVE.
(E.J. 9 to East Abutment)
(Looking West)
Scale: ¼" = 1'-0"

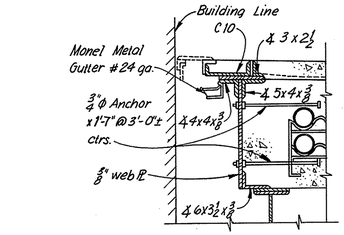

DETAIL A
(Typical Building Line Expansion Joint except as noted)
Scale: ¾" = 1'-0"

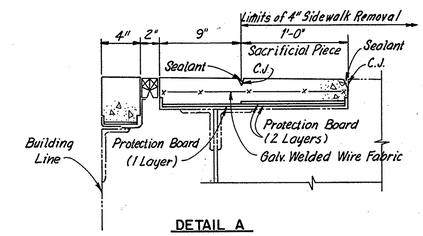

DETAIL A
Scale: 1½" = 1'-0"

(Typical Building Line Expansion Joint at Midland Building and Republic Building South side of Prospect Ave. see Sheet 20).

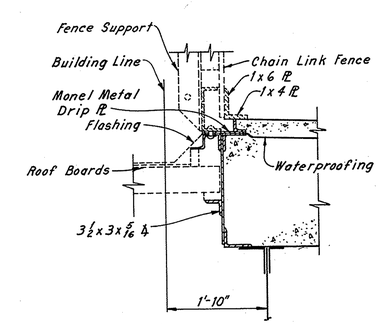

DETAIL A
(Typical Longitudinal Expansion Joint along parking area South side of Prospect and North of Huron between W. 2nd St. and W. 3rd. St.
Scale: ¾" = 1'-0"

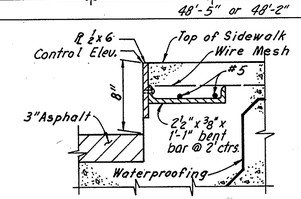

DETAIL B
Scale: 1½" = 1'-0"

NOTES:

1. EXISTING TYPICAL SECTIONS INTENDED TO SHOW APPROXIMATE LIMITS AND TYPE OF CONSTRUCTION. ACTUAL CONDITIONS VARY WITHIN LIMITS AND THE CONTRACTOR SHALL BE RESPONSIBLE FOR DETERMINING THE CONDITIONS WHICH EXIST AT THE TIME OF CONSTRUCTION.
2. EXISTING ASPHALT WEARING COURSE, CONCRETE SIDEWALK WEARING COURSE, ROADWAY FILL CONCRETE AND WATERPROOFING TO BE REMOVED FROM ENTIRE BRIDGE. SEE TYPICAL LIMITS OF REMOVAL DETAIL ON SHEET 54.

EUTHENICS INC.
CONSULTING ENGINEERS
CLEVELAND OHIO

REHABILITATION OF TOWER CITY BRIDGES
PROSPECT AVE., HURON ROAD,
WEST 2ND. 3RD. & 6TH. ST. VIADUCTS

EXISTING TYPICAL SECTIONS

PROSPECT AVE.

CLEVELAND CUYAHOGA COUNTY OHIO

Mode JSC	Trcd. JSC	Ckd. LJD	Rev. RAB	Scale: As Noted
Date 4-13-78	Date 4-20-78	Date 5-10-82	Date 9-6-82	Sheet 21 / 170

FHWA REGION	STATE	PROJECT	
5	OHIO	M-ID99(9)	

22 / 170

CUYAHOGA COUNTY
HURON/PROSPECT BRIDGE

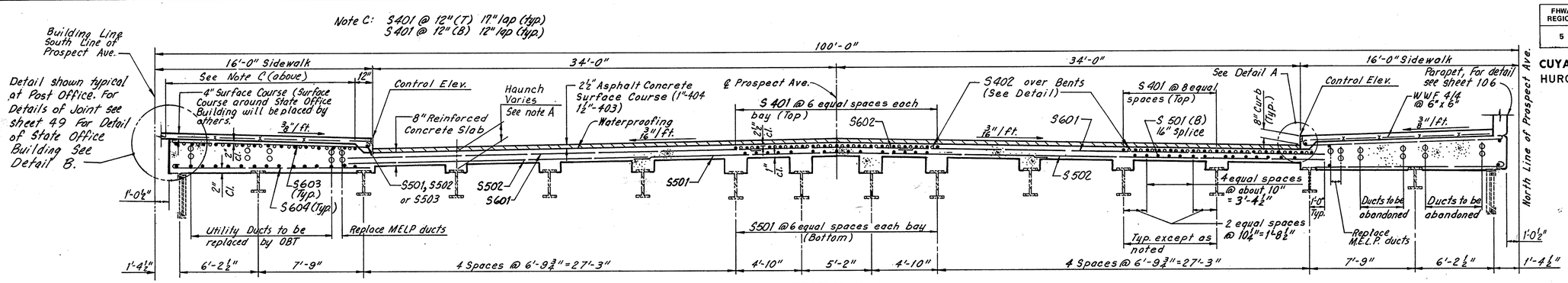

SECTION A-A
PROSPECT AVE. UNITS 1 THRU 3

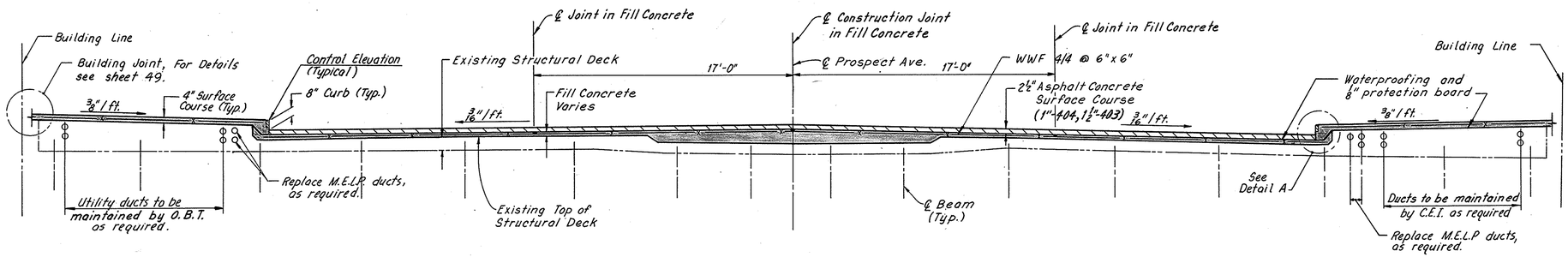

SECTION B-B
PROSPECT AVE. UNITS 4 THRU 13

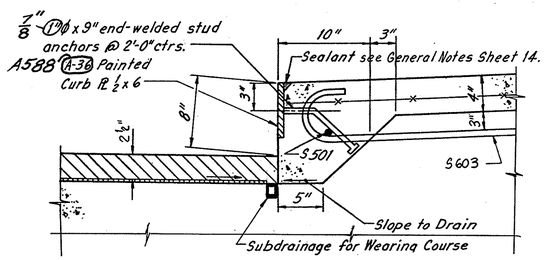

DETAIL A

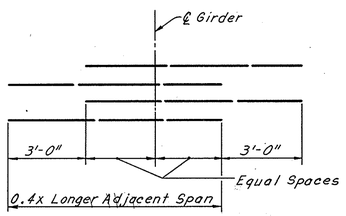

DETAIL SHOWING STAGGER OF S402 BARS OVER BENTS
No Scale

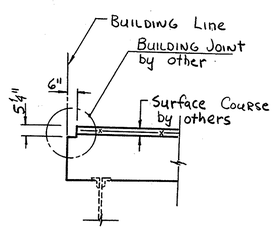

DETAIL B
(At State Office Building)

NOTE A:

THE HAUNCH DIMENSION WILL VARY FROM ABOUT 1'-0½" TO 1'-7", AS REQUIRED, TO MATCH THE FINAL GRADES. THE CONSULTANT WILL PROVIDE THE CONTRACTOR WITH THE FINAL PAVEMENT ELEVATIONS BASED ON THE RESULTS OF THE CONTRACTOR'S SURVEY. (SEE BID ITEM SPECIAL, CONSTRUCTION STAKES, LINES AND GRADES). THE CONTRACTOR SHALL ESTABLISH THE EXISTING TOP OF STEEL ELEVATIONS, AS NEEDED TO RECONSTRUCT THE SLAB. THE TOP OF STEEL PER THE EXISTING PLANS IS 1'-11" BELOW THE CONTROL ELEVATION AT THE SIDEWALK. THE CONCRETE SLAB SHOULD BE OF UNIFORM THICKNESS BETWEEN THE BEAMS.

THE 1-½" OF ITEM 403 ASPHALT INTERMEDIATE COURSE SHALL VARY AS REQUIRED TO PLACE THE SURFACE PARALLEL TO, AND 1-½" BELOW FINAL PAVEMENT SURFACE ELEVATION. SLIGHT VARIATIONS MAY BE REQUIRED TO ACCOUNT FOR DEFLECTIONS DUE TO THE WEIGHT OF THE CONCRETE SLAB.

NOTES:

1. CONTROL ELEVATIONS TO MATCH EXISTING, SEE ITEM 623, CONSTRUCTION STAKES, LINES AND GRADES IN GENERAL NOTES.
2. FOR DETAILS OF SUBDRAINAGE FOR WEARING COURSE, SEE SHEET 99.
3. FOR LOCATION OF SECTION A-A, SEE SHEET 18.
4. FOR LOCATION OF SECTION B-B, SEE SHEETS 18 THRU 20.
5. WELDED WIRE FABRIC IN THE SIDEWALK SURFACE COURSE SHALL BE EPOXY COATED.

Revised 12-19-83

EUTHENICS INC.
CONSULTING ENGINEERS
CLEVELAND OHIO

REHABILITATION OF TOWER CITY BRIDGES
PROSPECT AVE., HURON ROAD,
WEST 2ND., 3RD. & 6TH. ST. VIADUCTS

PROPOSED CROSS SECTIONS

PROSPECT AVE.

CLEVELAND CUYAHOGA COUNTY OHIO

Made KRD	Trcd. JSC	Ckd. LJD	Rev. RAB	Scale: 1" = 1'-0"
Date 4-20-78	Date 4-27-78	Date 5-17-82	Date 9-6-82	Sheet 22/170

FHWA REGION	STATE	PROJECT	
5	OHIO	M-ID 99(9)	

23
170

CUYAHOGA COUNTY
HURON / PROSPECT BRIDGE

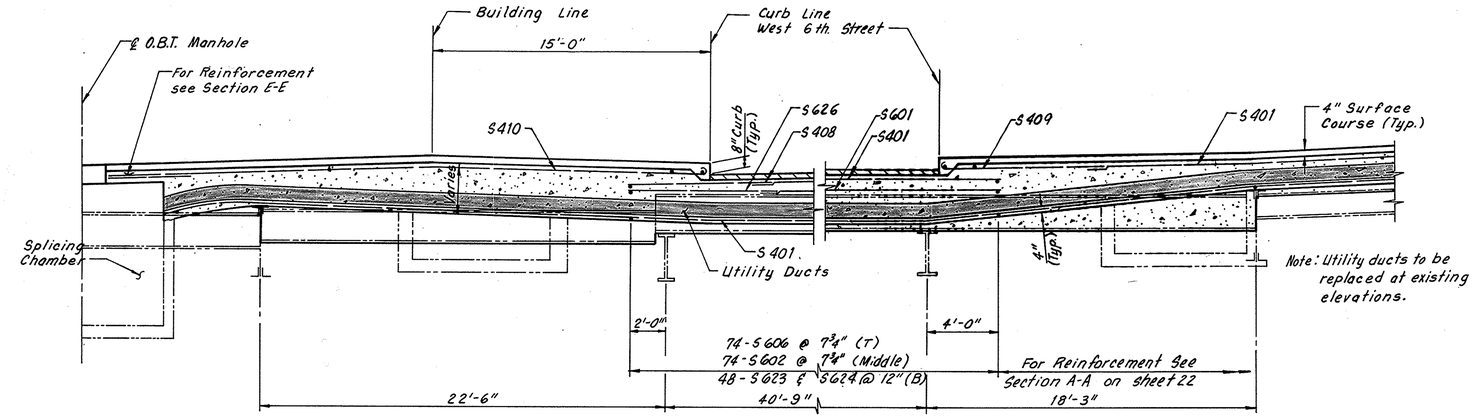

SECTION C-C – PROSPECT AVE.

For location see Sheet 18.
Section C-C-Huron Rd. Similar
For location see Sheet 26.

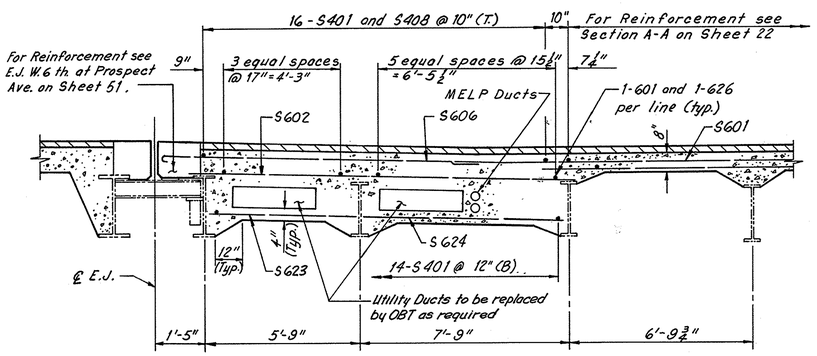

SECTION D-D
Scale: ⅜" = 1'-0"

Note: Section at W. 2nd. Street is similar.

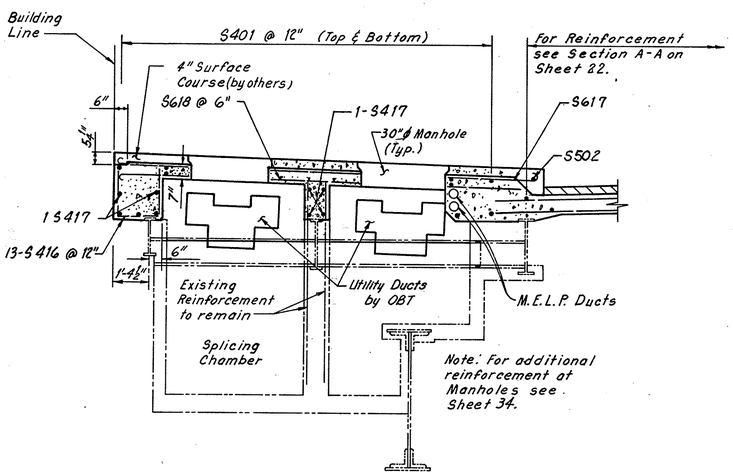

SECTION E-E
Scale: ⅜" = 1'-0"

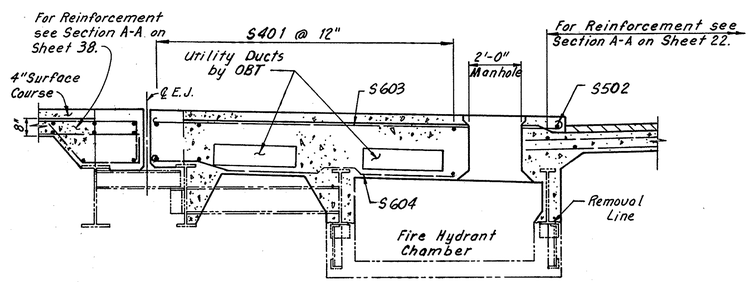

SECTION F-F
Scale: ⅜" = 1'-0"

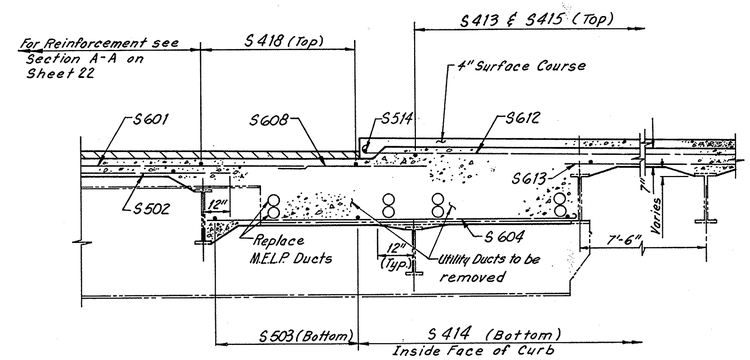

SECTION G-G
Scale: ⅜" = 1'-0"

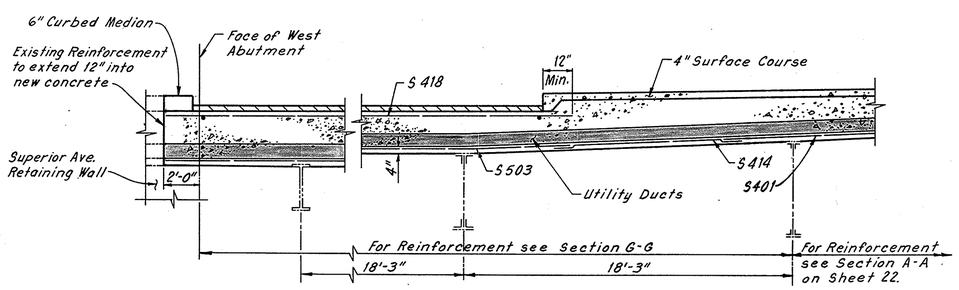

SECTION H-H
Scale: ¼" = 1'-0"

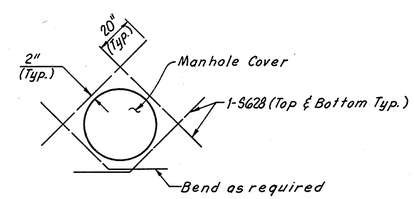

ADDITIONAL REINFORCEMENT AT FIRE HYDRANT MANHOLES
No Scale

NOTES:
1. FOR LOCATION OF SECTION C-C THROUGH SECTION H-H, SEE SHEET 18.

EUTHENICS INC.
CONSULTING ENGINEERS
CLEVELAND OHIO

REHABILITATION OF TOWER CITY BRIDGES
PROSPECT AVE., HURON ROAD,
WEST 2ND., 3RD. & 6TH. ST. VIADUCTS

DECK REPAIR SECTIONS

PROSPECT AVE.
CLEVELAND CUYAHOGA COUNTY OHIO

Made KRD	Trcd. JSC	Ckd. LJD	Rev. RAB	Scale: As Noted
Date 10-5-81	Date 10-12-81	Date 9-6-82	Date 10-4-82	Sheet 23/170

FHWA REGION	STATE	PROJECT	
5	OHIO	M-ID 99 (9)	

24
170

CUYAHOGA COUNTY
HURON/PROSPECT BRIDGE

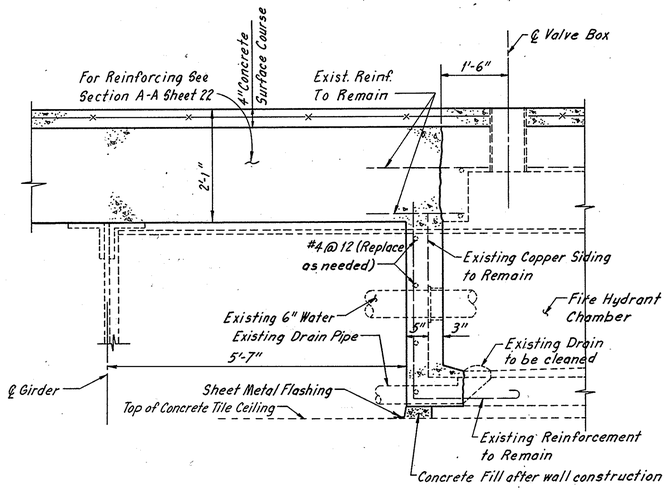

SECTION A-A
(Concrete Fire Hydrant Wall Repair
Looking South for location see Sheet 20)

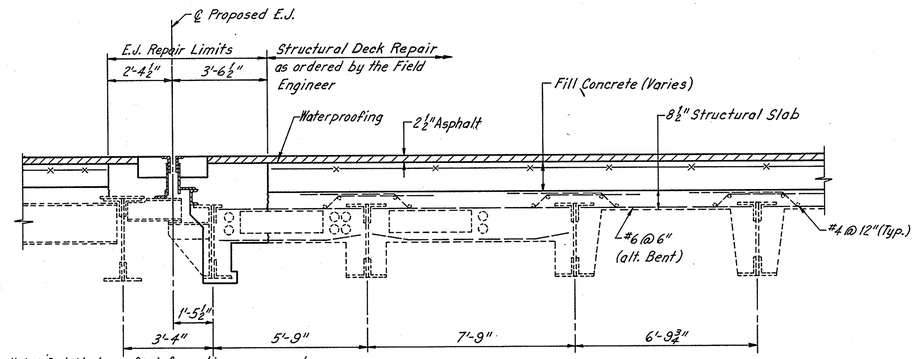

Note: Detail shown for information purposes to show typical duct deflection @ street intersection - Prospect @ W. 2nd. St. shown Huron Rd. @ W. 2nd. St. similar. Reinforcement similar to Sections C-C and D-D on Sheet 23.

SECTION C-C
(See Sheet Nos. 20, 28 & 42)

Note: For Expansion Joint Details see Sheets 46 thru 53.

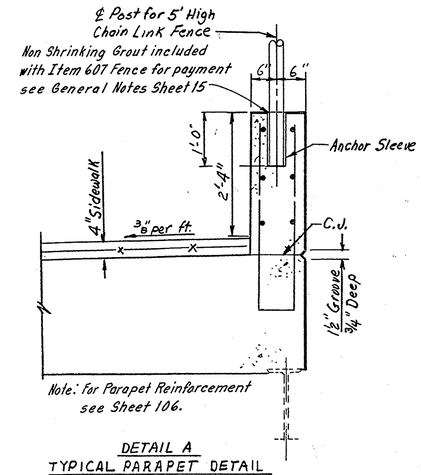

Note: For Parapet Reinforcement see Sheet 106.

DETAIL A
TYPICAL PARAPET DETAIL
(North Side Prospect Ave.)

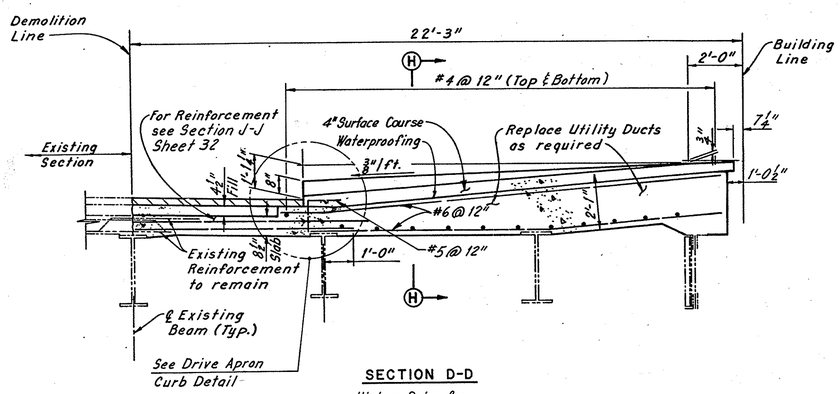

SECTION D-D
Higbee Drive for location see Sheet 20.

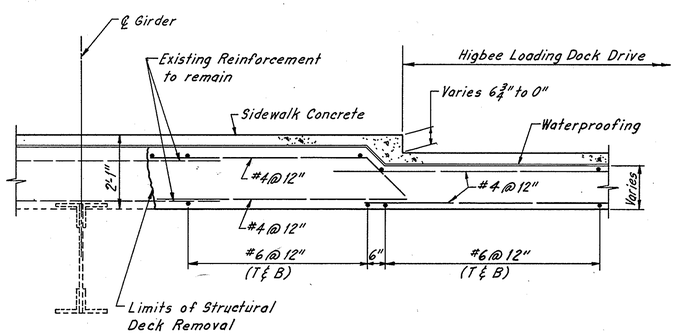

SECTION H-H
(East Curb Similar)

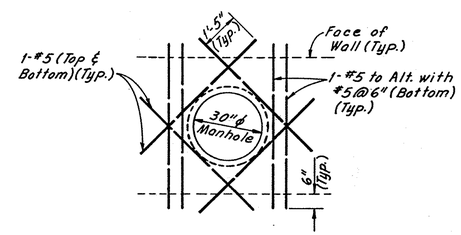

ADDITIONAL REINFORCEMENT AT SPLICING CHAMBER MANHOLE
No Scale

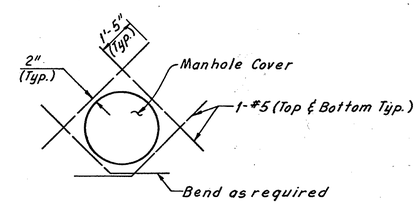

ADDITIONAL REINFORCEMENT AT FIRE HYDRANT MANHOLES
No Scale

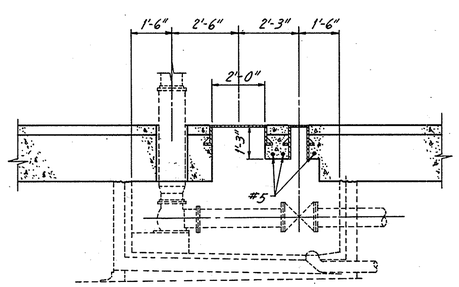

SECTION F-F
Fire Hydrant Vault
(For location see Sheet 20)

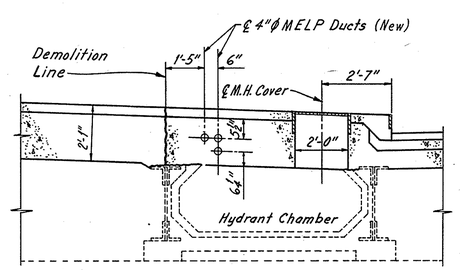

SECTION G-G
(For location see Sheets 20 & 120)

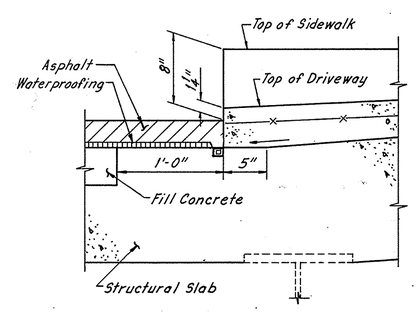

DRIVE APRON CURB DETAIL
Higbees Drive

EUTHENICS INC.
CONSULTING ENGINEERS
CLEVELAND OHIO

REHABILITATION OF TOWER CITY BRIDGES
PORTIONS OF PROSPECT AVE., HURON RD., WEST 2nd. & 3rd. ST. VIADUCTS

DECK REPAIR SECTIONS

PROSPECT AVE.

CLEVELAND CUYAHOGA COUNTY OHIO

Made LRH	Trcd. JSC	Ckd. LJD	Rev. RAB	Scale: No Scale
Date 10-12-81	Date 10-28-81	Date 9-8-82	Date 10-4-82	Sheet 24/170

FHWA REGION	STATE	PROJECT	
5	OHIO	M-ID 99 (9)	

25/170

CUYAHOGA COUNTY
HURON / PROSPECT BRIDGE

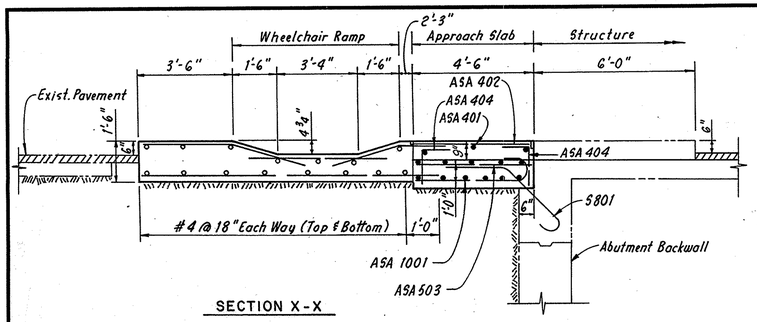

SECTION X-X

DETAIL A

(6" Raised Traffic Island Included with West Approach for Payment)

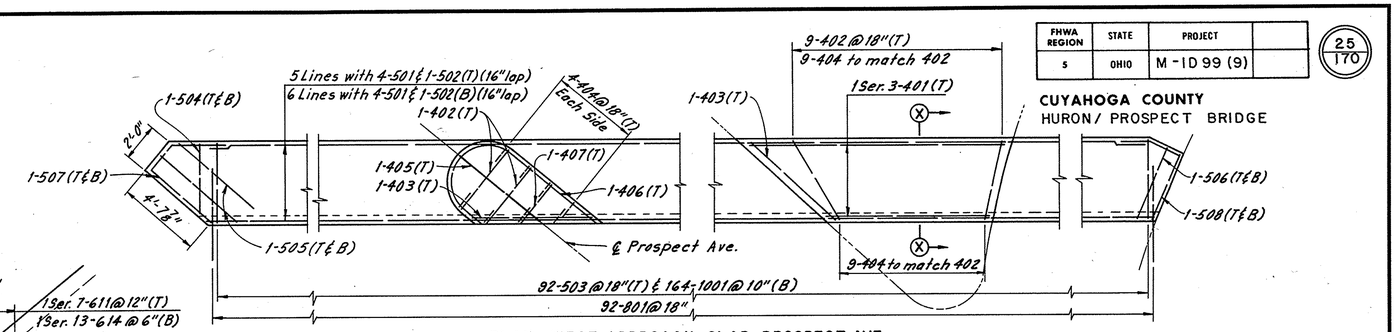

PLAN - WEST APPROACH SLAB PROSPECT AVE.

NOTES: ALL REINFORCING BARS IN WEST APPROACH SLAB - PROSPECT AVE. SHALL BE PREFIXED ASA. FOR REINFORCEMENT SCHEDUAL SEE SHEET 127

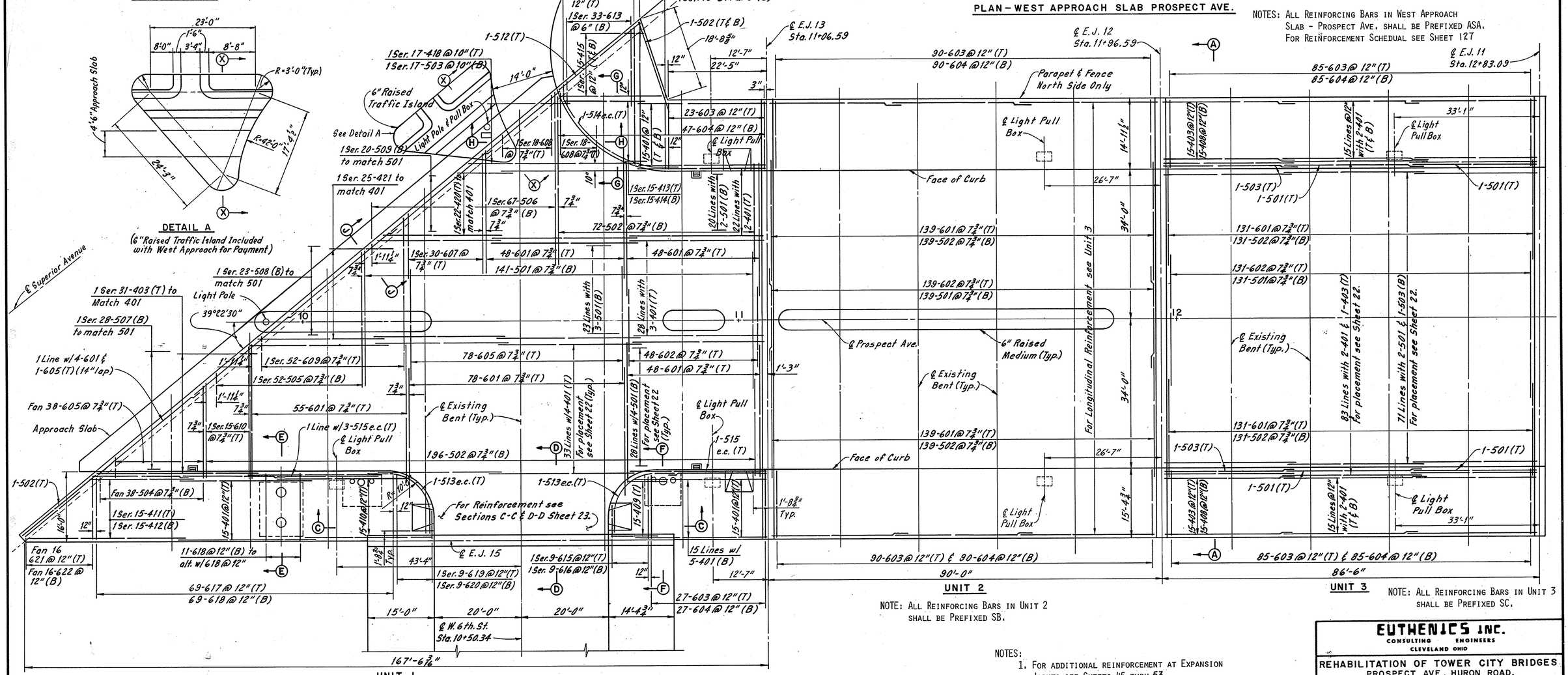

UNIT 1

NOTE: ALL REINFORCING BARS IN UNIT 1 SHALL BE PREFIXED SA.

UNIT 2

NOTE: ALL REINFORCING BARS IN UNIT 2 SHALL BE PREFIXED SB.

UNIT 3

NOTE: ALL REINFORCING BARS IN UNIT 3 SHALL BE PREFIXED SC.

LEGEND

(T) = TOP
(B) = BOTTOM
E.C. INDICATES BARS TO BE EPOXY COATED

NOTES:

1. FOR ADDITIONAL REINFORCEMENT AT EXPANSION JOINTS SEE SHEETS 46 THRU 53.
2. FOR PARAPET & FENCE DETAILS SEE SHEET 106.
3. FOR SECTION A-A SEE SHEET 22.
4. FOR SECTIONS C-C THRU H-H SEE SHEET 23.
5. FOR SECTION J-J SEE SHEET 18.
6. FOR DETAILS AND REINFORCING OF THE LIGHT PULL BOXES SEE SHEET 122.

EUTHENICS INC.
CONSULTING ENGINEERS
CLEVELAND OHIO

REHABILITATION OF TOWER CITY BRIDGES
PROSPECT AVE., HURON ROAD, WEST 2ND., 3RD. & 6TH. ST. VIADUCTS

SLAB PLAN
UNITS 1,2 AND 3
PROSPECT AVE.

CLEVELAND CUYAHOGA COUNTY OHIO

Mode KRD	Trcd. JSC	Ckd. LJD	Rev. RAB	Scale: 3/32"=1'-0"
Date 4-1-82	Date 7-13-82	Date 8-12-82	Date 10-5-82	Sheet 25/170

FHWA REGION	STATE	PROJECT	
5	OHIO	IX-ID99(9)	

25A

CUYAHOGA COUNTY
HURON/PROSPECT BRIDGE

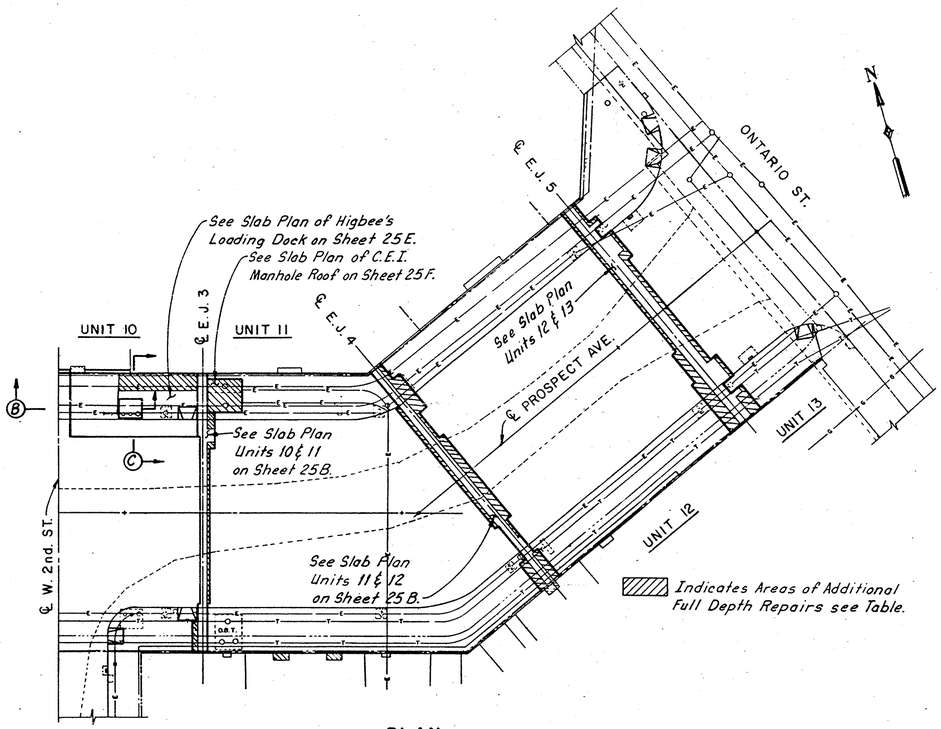

PLAN

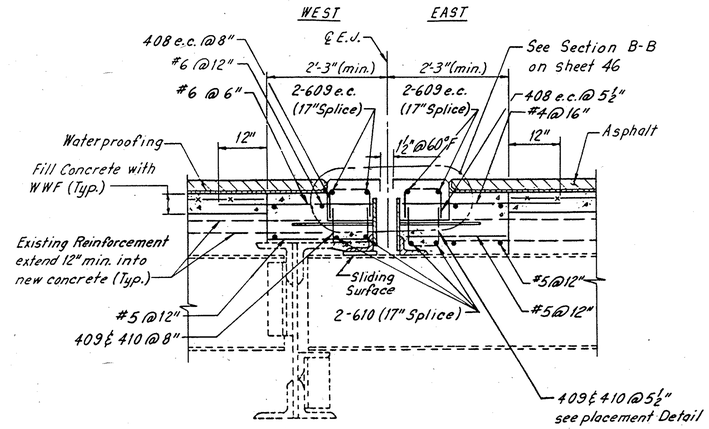

TYPICAL ROADWAY EXPANSION JOINT

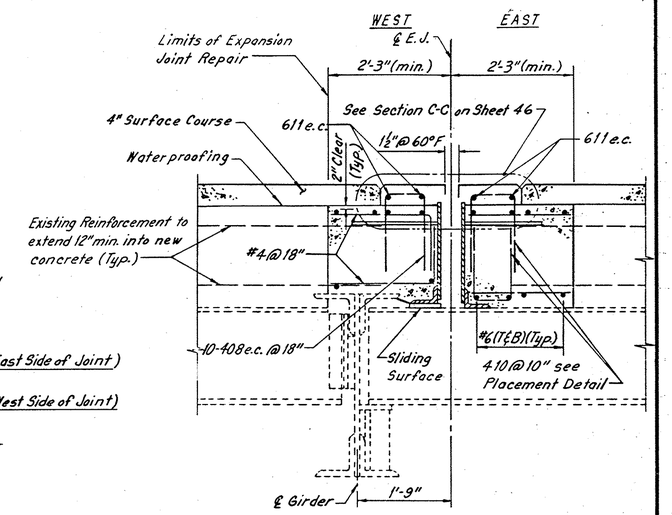

TYPICAL SIDEWALK EXPANSION JOINT

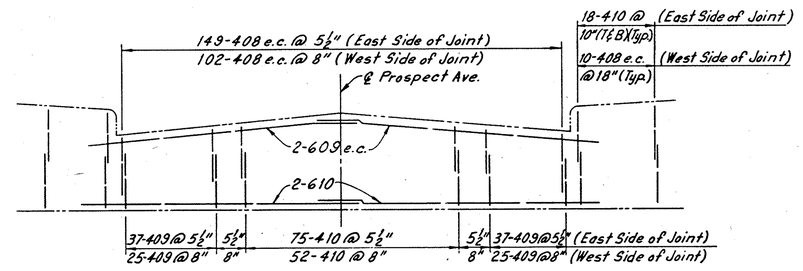

STIRRUP REINFORCEMENT PLACEMENT AT EXPANSION JOINT
(Typ. for Expansion Joints 3, 4 and 5)

ADDITIONAL AREA REPAIRED	
ITEM SPECIAL-PATCHING EXISTING CONCRETE DECK-SLABS FULL DEPTH	
LOCATION	SQ. FT.
Unit 10	
E.J. 3	15
Higbee's Loading Dock	201
Total Unit 10	216
Unit 11	
E.J. 3	45
E.J. 4	25
C.E.I. Manhole Roof	138
Total Unit 11	208
Unit 12	
E.J. 4	113
E.J. 5	75
Total Unit 12	188
Unit 13	
E.J. 5	81
Total Unit 13	81

Unit 12: Prefix All Bars SHH

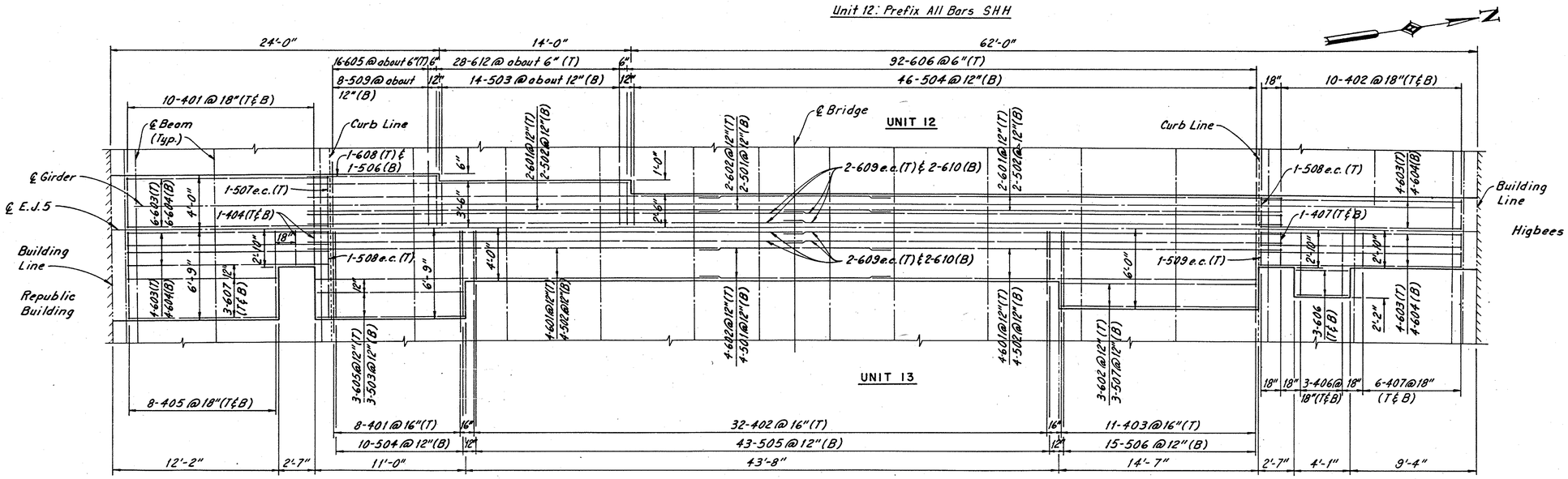

Unit 13: Prefix All Bars SJJ

SLAB PLAN
Unit 12 & Unit 13

NOTES:
- For Sections B-B & C-C see Sheet 25F.
- For additional details see Sheet 20.
- For Reinforcement Schedule see Sheet 25D.
- All # 5 Bars shall be spliced 16".
- All # 6 Bars shall be spliced 17".

EUTHENICS INC.
CONSULTING ENGINEERS
CLEVELAND OHIO

REHABILITATION OF TOWER CITY BRIDGES
PROSPECT AVE., HURON ROAD,
WEST 2ND., 3RD. & 6TH. ST. VIADUCTS
SLAB PLAN
UNITS 10 THRU 13
PROSPECT AVE. PHASE I-A

CLEVELAND CUYAHOGA COUNTY OHIO

Made LJD	Trcd. JSC	Ckd. JSC	Rev. RAB	Scale:
Date 5-23-84	Date 5-24-84	Date 5-24-84	Date 5-25-84	Sheet 25A

Sheet added 8-6-84

ODOT TES 7-24-84